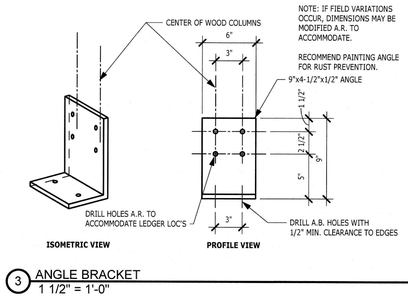

3 ANGLE BRACKET
1 1/2" = 1'-0"

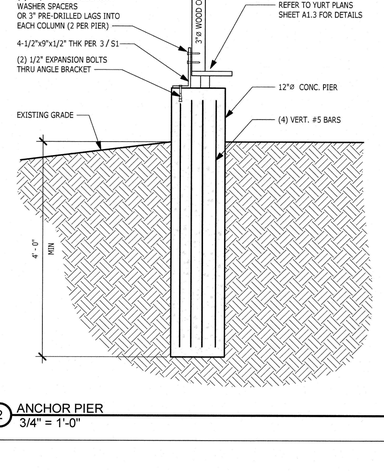

2 ANCHOR PIER
3/4" = 1'-0"

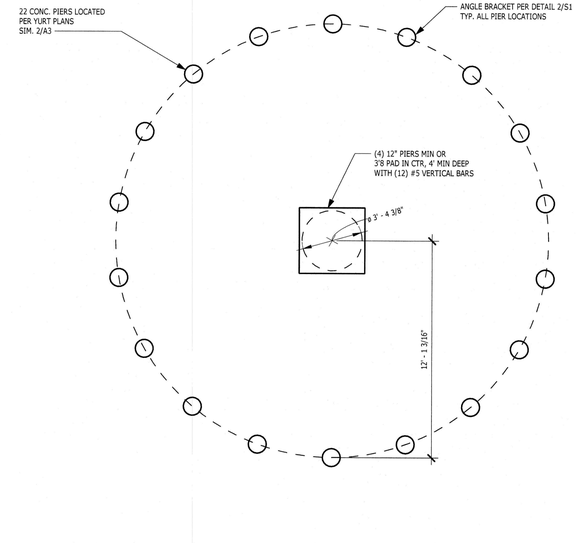

1 FOUNDATION
1/4" = 1'-0"

GEOTECHNICAL ENGINEER
DOWLING LAND SURVERYORS
P.O. BOX 954
HAYDEN CO.
dowling@blotz.biz
(970) 276-3813

STRUCTURAL ENGINEER
BEAR VALLEY DESIGN
GREG HERMAN

PROJECT LOCATION
30857 COUNTY ROAD 53
ROUTT COUNTY, COLORADO

OWNER INFORMATION
JMS BEAR CREEK RANCH LLC
130 CASUARINA CONCOURSE
CORAL GABLES, FL 33143

CONTRACTOR
OWNER CONTRACTOR

DESIGNER
HAYDEN HOME DESIGNS
Victor Martin
(970)819-9330
vwmartin4@gmail.com

No.	Description	Date

JMS BEAR CREEK RANCH LLC

FOUNDATION PLAN

Project number	30
Date	9/27/24
Drawn by	VWM
Checked by	VWM
SHEET	
	S1
Scale	As indicated

9/27/2024 9:37:47 AM