RCRBD Record Set
T.A.

05/14/2020

# STRAWBERRY PARK ELEMENTARY ADDITION/RENOVATION

## 39620 AMETHYST DRIVE

STEAMBOAT SPRINGS, CO

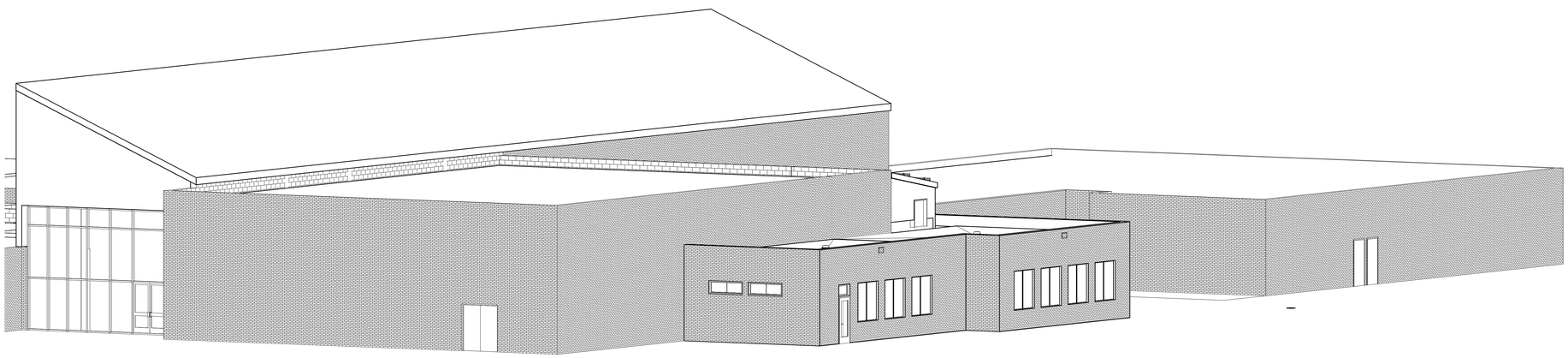

Construction Documents
04/06/20


TAB Associates
*The Architectural Balance*
0056 Edwards Village Blvd.
Suite 210
Edwards, CO 81632
(970) 766-1470
fax: (970) 766-1471
email: tab@vail.net
www.tabassociates.com

Civil Engineer
Alpine Engineering, Inc.
970-926-3373

Structural Engineer
JH Structural Engineers
303-318-6539

Mechanical Engineer
BG BuildingWorks, Inc.
970-949-6108

Electrical Engineer
BG BuildingWorks, Inc.
970-949-6108


Seal

**Strawberry Park Elementary**
**39620 Amethyst Drive**
**Steamboat Springs, CO**

Revisions:

| No | Description | Date |
|---|---|---|
| | | |

Issue Dates:
Concept - 11/19/2019
SD's - 1/13/20
DD's - 2/20/20
95% - 03/30/20
CDs - 04/06/20

Sheet Title:
**Cover**

Project No:
1935.02

Sheet No:
A0.00

# GENERAL NOTES

**GENERAL NOTES:**

1. DO NOT SCALE DRAWINGS. USE GIVEN DIMENSIONS. IMMEDIATELY NOTIFY ARCHITECT IF ADDITIONAL INFORMATION IS REQUIRED. ALL DIMENSIONS ARE GIVEN TO FACE OF WALL FRAMING. SEE WALL SECTIONS AND WALL TYPES FOR EXACT CONSTRUCTION
2. SEE SHEET A0.03 FOR WALL TYPES INDICATED ON FLOOR PLANS
3. PROVIDE ALL NECCESSARY BLOCKING, FOR PROPER ATTACHEMENT OF WORK, IN WALLS AND CEILINGS. LOCATIONS INCLUDE, BUT NOT LIMITED TO, TOILET AND BATH ACCESSORIES, WALL AND CEILING MOUNTED ELECTRICAL EQUIPMENT, WINDOW TREATMENTS, CASEWORK, COUNTERTOPS, ETC.
4. WHERE WALL PARTITIONS ARE A CONTINUTATION OF EXISTING ONES, NEW FINISH SURFACES MUST BE FLUSH AND CONTINOUTS WITH EXISTING SURFACES ON BOTH SIDES. INFILL OPEINGS IN EXISTING WALLS WITH MATERIAL TO MATCH EXISTING WALL THICKNESS, TEXTURE AND FINISH.
5. REFERENCE S-SERIES DRAWINGS FOR STRUCTURAL NOTES AND DETAILS AND COORDINATE
6. EXISTING BUILDING DIMENSIONS AND ELEVATIONS ARE BASED UPON EXISTING SUREVEY INFORMATION. IMMEDIATELY NOTIFY ARCHITECT IF CONDITIONS ARE ENCOUNTERED THAT DO NOT AGREE WITH DIMENSIONS AND/OR ELEVATIONS SHOWN.
7. VERIFY ALL PITCHED FLOOR AREAS SHOWN WITH PITCH LINES WITH THE ARCHITECT. PROVIDE A SLAB DEPRESSION AT ALL FLOOR DRAINS WHERE PITCH LINES ARE NOT SHOWN ON DRAWINGS.
8. PRVOIDE 4" RETURN FROM FACE OF ADJACENT WALL FOR ANY DOORS NOT DIMENSIONED.
9. SEE MECHANICAL, PLUBMING AND ELECTRICAL DRAWINGS FOR ITEMS NOT SHOWN ON ARCHITECTURAL DRAWINGS AND COORDINATE.
10. ALL INTERIOR WALLS SHALL EXTEND TO UNDERSIDE OF ROOF DECK AND STEEL STRUCTURE (BEAM) UNLESS NOTED OTHERWISE. SEE PARTITION WALL TYPES ON SHEET A0.03.
11. DATUM 100'-0" INDICATED ON ALL DRAWINGS, OTHER THAN CIVIL SERIES, EQUALS 6851.20 ON CIVIL SERIES DRAWINGS.
12. ALL STEEL LOCATED BELOW AND EXPOSED TO GRADE TO BE COATED WITH BITUMINOUS DAMPROOFING.
13. CONTRACTOR TO COMPLY WITH ALL REQUIREMENTS FOR SPECIAL INSPECTIONS, 2015 IBC - 1704.

# ABBREVIATIONS

| | | | |
|---|---|---|---|
| AFF | ABOVE FINISHED FLOOR | HORZ | HORIZONTAL |
| APC | ACOUSTIC CEILING TILE | HP | HORSE POWER |
| ALT | ALTERNATE | HW | HOT WATER |
| ALUM | ALUMINUM | HWC | HOT WATER CIRCULATION |
| A | AMPERE | HR | HOUR |
| AB | ANCHOR BOLT | | |
| ARCH | ARCHITECT(URAL) | INSUL | INSULATION, INSULATING |
| BKG | BACKGROUND | JT | JOINT |
| BM | BEAM | | |
| BRG | BEARING | KV | KILOVOLT |
| BRD | BOARD | KVA | KILOVOLT AMPERE |
| BO | BOTTOM OF | | |
| BOT | BOTTOM | MH | MANHOLE |
| BRKR | BREAKER | MFR | MANUFACTURE(R) |
| BTU | BRITISH THERMAL UNIT | MAX | MAXIMUM |
| BTUH | BTU PER HOUR | MECH | MECHANICAL |
| BLDG | BUILDING | | |
| BUR | BUILT UP ROOFING | MTL | METAL |
| | | MIN | MINIMUM |
| CLG | CEILING | | |
| CL | CENTER LINE | N | NORTH |
| C/C | CENTER TO CENTER | NO | NUMBER |
| CO | CLEAN OUT | | |
| C | CONDUIT | OC | ON CENTER |
| CW | COLD WATER | OPP | OPPOSITE |
| COL | COLUMN | OZ | OUNCE(S) |
| CONC | CONCRETE | OD | OUTSIDE DIAMETER |
| CONT | CONTINOUS, CONTINUE | OSF | OUTSIDE FACE |
| CJ | CONTROL JOINT | | |
| CORR | CORRUGATGED | PERF | PERFORATED |
| CMP | CORRUGATED METAL PIPE | PL | PLATE |
| X | CROSS | P | POLE |
| CFM | CUBIC FEET PER MINUTE | POLY | POLYETHYLENE |
| | | POLYST | POLYSTYRENE |
| D | DEEP/DEPTH | PVC | POLYVINYL CHLORIDE |
| DTL | DETAIL | PW | POTABLE WATER |
| DIAG | DIAGONAL | PSF | PRESSURE PER SQUARE FOOT |
| DIA | DIAMETER | PSI | PRESSURE PER SQUARE INCH |
| DIAPH | DIAPHRAM | PRV | PRESSURE RELIEVE VALVE |
| DHW | DOMESTIC HOT WATER | PRO | PROJECTION |
| DWG | DRAWING | PL | PROPERTY LINE |
| | | PLAM | PLASTIC LAMINATE |
| EA | EACH | | |
| ELEC | ELECTRIC | REINF | REIFINFORCE(D), (ING) |
| EWC | ELECTRIC WATER COOLER | RCP | REFLECTED CEILING PLAN |
| ADA LIFT | ELEVATION, ELEVATOR | RM | ROOM |
| EMBED | EMBEDMENT | SCH | SCHEDULE |
| EM | EMERGENCY | SHT | SHEET |
| EX | EXISTING | SIM | SIMILAR |
| EXIST | EXISTING | SLH | SPRING LOADED HINGES |
| EXP | EXPANSION | SPEC | SPECIFICATION(S) |
| EXT | EXTERIOR, EXTRUDED | SF | SQUARE FOOT (FEET) |
| | | STL | STEEL |
| FD | FLOOR DRAIN | STIFF | STIFFENER |
| FE | FIRE EXTINGUISHER | STN | STONE |
| FEC | FIRE EXTENGUISHER CABINET | SD | STORM DRAIN |
| FT | FEET | STRUCT | STRUCTURAL |
| FG | FIBERGLASS | SUSP | SUSPENDED |
| FF | FINISH FLOOR | | |
| FH | FIRE HYDRANT | T&G | TOUNGE & GROOVE |
| FLG | FLANGE | TC | TEMPERATURE CONTROL |
| FLOUR | FLOURESCENT | THK | THICKNESS |
| FP | FIREPLACE | THRU | THROUGH |
| FTG | FOOTING | TO | TOP OF |
| FS | FLOOR SINK | TRANSV | TRANSVERSE |
| GA | GAUGE | TS | TUBE STEEL |
| GAL | GALLON | TYP | TYPICAL |
| GALV | GALVANIZED | | |
| GI | GALVANIZED IRON | UG | UNDERGROUND |
| G | GAS | UNO | UNLESS NOTED OTHERWISE |
| GMNU | GLASS MESH MORTAR UNIT(S) | | |
| GND | GROUND | VB | VAPOR BARRIER |
| GR | GRADE, GRADING | VERT | VERTICAL |
| GYP | GYPSUM | VEST | VESTIBULE |
| GWB | GYPSUM WALL BOARD | V | VOLT |
| H&V | HEATING & VENTILATING | WC | WATER CLOSET/WATER COLUMN |
| HDO | HIGH DENSITY OVERLAY | WD | WOOD |
| HDPE | HIGH DENSITY POLYETHYLENE | WWF | WELDED WIRE FABRIC |
| HGT | HEIGHT | W | WEST/WATER/WIDE/WIDTH |
| HK | HOOK(S) | W/ | WITH |
| HM | HOLLOW METAL | W/O | WITHOUT |

# PROJECT DIRECTORY

| | |
|---|---|
| OWNER | STEAMBOAT SPRINGS SCHOOL DISTRICT<br>325 7TH STREET<br>STEAMBOAT SPRINGS, CO 80487<br>(970) 871-3188<br>Pascal Ginesta<br>pginesta@ssk12.org |
| OWNERS REPRESENTATIVE | DYNAMIC PROGRAM MANAGEMENT<br>Colleen Kaneda<br>(970) 390-0312<br>colleen.kaneda@dynamicpm.co<br>Todd Raper<br>(970) 986-2274<br>todd.raper@dynamicpm.co |
| ARCHITECT | TAB ASSOCIATES, Inc.<br>50 EDWARDS VILLAGE BLVD SUITE 210<br>EDWARDS, CO 81632<br>(970) 766-1470<br>(970) 766-1741 FAX<br>PROJECT ARCHITECT - Greg Macik X107<br>greg@tabassociates.com<br>PROJECT MANAGER - Warner Hopkins X111<br>warner@tabassociates.com |
| CIVIL ENGINEER | ALPINE ENGINEERING<br>34510 HIGHWAY 6<br>EDWARDS, CO 81632<br>(970) 926-3373<br>PRINCIPAL - Matt Wadey<br>wadey@alpinecivil.com |
| LANDSCAPE ARCHITECT | DHM DESIGN<br>900 SOUTH BROADWAY<br>SUITE #200<br>DENVER, CO 80209<br>(303) 892-5566<br>PRINCIPAL - Mark Wilcox (DENVER)<br>mwilcox@dhmdesign.com<br>ASSOC PRINCIPAL - Marc Diemer (CARBONDALE)<br>mdiemer@dhmdesign.com |
| STRUCTURAL ENGINEER | JIRSA/HEDRICK<br>P.O. BOX 4989<br>EAGLE, CO 81631<br>(303) 318-6539<br>Matt Hood<br>mhood@jirsahedrick.com |
| MECHANICAL/ELECTRICAL/<br>TECHNOLOGY ENGINEERS | BG WORKS<br>P.O. BOX 9650<br>AVON, CO 81620<br>(970) 949-6108<br>ELECTRICAL - Marc Sacconi<br>masacconi@bgbuildingworks.com<br>MECHANICAL - David Lyle<br>dalyle@bgbuildingworks.com<br>TECHNOLOGY - ERIC ADEN<br>eladen@bgbuildingworks.com |
| ACOUSTICAL ENGINEER | WAVE ENGINEERING<br>1100 W. LITTLETON BLVD<br>SUITE 420<br>LITTLETON, CO 80120<br>(720) 446-9283<br>Jeff Kwolkoski<br>jeffk@waveengineering.us |
| KITCHEN CONSULTANT | KITCHENTECH<br>(303) 835-2018<br>Brian Johnson<br>brian@kitchentech.boz |
| CONTRACTOR | HASELDEN CONSTRUCTION<br>6950 SOUTH POTOMAC ST<br>CENTENNIAL, CO 80112<br>(970) 453-3959<br>PRECONSTRUCTION MANAGER - David Marsh<br>DavidMarsh@haselden.com |

# DRAWING INDEX

SHEET LIST

| SHEET NUMBER | SHEET NAME | Sheet Sort Order |
|---|---|---|
| A0.00 | Cover | 1 |
| A0.01 | Index Sheet | 2 |
| A0.02 | Code Summary | 2.1 |
| A0.03 | Wall Types | 2.2 |
| A0.04 | Door and Window Schedules | 2.3 |
| A0.05 | Room Finish Schedule | 2.4 |
| C1.1 | Demolition Site | 3.1 |
| C2.0 | Grading and Drainage Plan | 3.2 |
| C3.0 | Utility Plan | 3.3 |
| C4.0 | Grading and Drainage Details | 3.4 |
| C4.1 | Water and Sewer Details | 3.5 |
| L1.0 | Existing Conditions and Demolition Plans | 4 |
| L2.0 | Site Plan | 4.1 |
| L2.1 | Site Plan Enlargement | 4.2 |
| L3.0 | Landscape Plan | 4.3 |
| L3.1 | Landscape Notes | 4.4 |
| L4.0 | Site Details | 4.5 |
| L4.1 | Site Details | 4.51 |
| L4.2 | Site Details | 4.52 |
| L4.3 | Site Details | 4.53 |
| L4.4 | Site Details | 4.6 |
| L4.5 | Site Details | 4.7 |
| L4.6 | Site Details | 4.75 |
| L4.7 | Site Details | 4.76 |
| L4.8 | Site Details | 4.77 |
| IR1.0 | Irrigation Plan | 4.8 |
| IR1.1 | Irrigation Notes, Schedule and Details | 4.9 |
| A2.00 | Overall Building Plan | 5 |
| A2.01 | Existing Building Floor Area A | 5.1 |
| A2.02 | Existing Building Floor Area B | 5.2 |
| D2.01 | Demo Floor Area A | 5.3 |
| D2.02 | Demo Floor Area B | 5.4 |
| D3.01 | Demo Exterior Elevations | 5.5 |
| A2.03 | Main Level Floor Area A | 5.6 |
| A2.04 | Pre-K Plan Floor Area B | 5.7 |
| A2.05 | Roof Plan | 5.8 |
| A2.06 | Floor Finish Plans | 5.9 |
| A2.07 | Floor Finish Plans | 5.95 |
| A3.01 | Exterior Elevations | 6 |
| A4.01 | Building Sections | 7 |
| A5.10 | Foundation/ Site Details | 8.2 |
| A5.20 | Plan Details | 8.3 |
| A5.30 | Wall/ Transition Details | 8.4 |
| A5.40 | Roof Details | 8.5 |
| A5.410 | Roof Details | 8.55 |
| A5.60 | Door Details | 8.6 |
| A5.61 | Door Details | 8.65 |
| A5.70 | Window Details | 8.7 |
| A5.90 | Ceiling Details | 8.8 |
| A6.01 | Reflected Ceiling Plan | 9 |
| A7.01 | Enlarged Plans | 10 |
| A8.01 | Interior Elevations Pre-K | 11 |
| A8.02 | Interior Elevations Art | 11.1 |
| A8.03 | Interior Elevations Music | 11.2 |
| A8.04 | Interior Elevations Cafeteria/ Kitchen | 11.3 |
| A8.05 | Restroom and Cabinet Elevations | 11.4 |
| A8.06 | Casework | 11.5 |
| S1.0 | General Notes | 12.01 |
| S1.1 | Slab on Grade and Typ Concrete Details | 12.02 |
| S1.2 | Steel Connection Schedules | 12.03 |
| S1.3 | Steel Bar Joist Roof Typ Details | 12.04 |
| S1.4 | Typ CFS Details | 12.05 |
| S1.5 | Inspection Schedules 2015 IBC | 12.06 |
| S1.6 | Loading Plan | 12.065 |
| S2.01 | Demo Main Level Plan | 12.07 |
| S2.02 | Demo Roof Plan | 12.08 |
| S2.11 | Main Level Plan | 12.09 |
| S2.12 | Roof Plan | 12.1 |
| S2.21 | Pre-K Area B Plans | 12.101 |
| S3.0 | Braced Frame Elevations and Details | 12.102 |
| S5.0 | Foundation Details | 12.11 |
| S5.1 | Roof Details | 12.12 |
| S5.2 | Roof Details | 12.125 |
| M0.0 | Mechanical Cover Sheet | 13.01 |
| M0.1 | Mechanical Schedules | 13.02 |
| M1.1 | Snowmelt Plan | 13.06 |
| MD2.1 | Area A Main Level Mechanical Plan - Demo | 13.07 |
| MD2.2 | Area B Main Level Mechanical Plan - Demo | 13.08 |
| MD3.1 | Area A - Roof Mechanical Plan - Demo | 13.09 |
| M2.1 | Area A - Main Level Mechanical Plan - New | 13.1 |
| M2.2 | Area B - Main Level Mechanical Plan - New | 13.11 |
| M3.1 | Area A - Roof Mechanical Plan - New | 13.12 |
| MC2.1 | Main Level Area A Mechanical Coordination Ceiling Plan | 13.125 |
| MC2.2 | Pre-K Plan Area B Mechanical Coordination Ceiling Plan | 13.126 |
| MPD2.1 | Area A - Main Level Plumbing Plan - Demo | 13.13 |
| MPD2.2 | Area B - Main Level Plumbing Plan - Demo | 13.14 |
| MP2.1 | Area A - Main Level Plumbing Plan - New | 13.15 |
| MP2.2 | Area B - Main Level Plumbing Plan - New | 13.16 |
| MP3.1 | Area A - Roof Plumbing Plan - New | 13.17 |
| M4.1 | Mechanical Diagrams | 13.18 |
| M4.2 | Mechanical Diagrams | 13.19 |
| M4.3 | Mechanical Diagrams | 13.2 |
| E0.0 | Electrical Cover Sheet | 14.01 |
| E0.1 | Electrical Schedules | 14.02 |
| E0.2 | Electrical Schedules | 14.03 |
| E1.0 | Electrical Site Plan | 14.04 |
| ED2.1 | First Level Area A Demo Elec Plan | 14.05 |
| ED2.2 | First Level Area B Demo Elec Plan | 14.06 |
| ED2.11 | First Level Area A Demo Lighting Plan | 14.07 |
| ED2.12 | First Level Area B Demo Lighting Plan | 14.08 |
| E2.1 | First Level Area A Elec Plan | 14.09 |
| E2.2 | First Level Area B Elec Plan | 14.1 |
| E2.3 | Electrical Roof Plan | 14.1 |
| E2.11 | First Level Area A Lighting Plan | 14.11 |
| E2.12 | First Level Area B Lighting Plan | 14.12 |
| E3.1 | Electrical Diagrams | 14.13 |
| T0.0 | Tech Cover Sheet | 15.01 |
| TD2.1 | First Level Area A Demo Tech Plan | 15.05 |
| TD2.2 | First Level Area B Demo Tech Plan | 15.06 |
| T2.1 | First Level Area A Tech Plan | 15.07 |
| T2.2 | First Level Area B Tech Plan | 15.08 |
| T4.1 | Technology Enlarged Plans | 15.09 |
| T5.1 | Technology Riser Diagrams | 15.1 |
| T5.2 | Technology Functional Diagrams | 15.11 |
| T6.0 | Technology Diagrams | 15.12 |
| FS201 | Kitchen Equipment Plan | 16.1 |
| FS202 | Kitchen Plumbing, Mech and Electrical | 16.2 |
| FS203 | Kitchen Exhaust Hood | 16.3 |
| FS502 | General Notes | 16.4 |

# MATERIALS LEGEND

ALUMINUM
CMU
PLYWOOD
ACT
EARTH
RIGID INSULATION
BATT INSULATION
EARTH FILL
STEEL
BRICK
GYPSUM BOARD
WOOD FINISH
CONCRETE
METAL STUD
WOOD ROUGH
GRAVEL
ASPHALT
STONE VENEER

# ALTERNATES

ALTERNATE:
ACOUSTICAL WALL PANELS IN ART ROOM.

ALTERNATE:
ACOUSTICAL WALL PANELS IN CAFETERIA

ALTERNATE:
WATER SUPPLY FOR FUTURE FIRE SPRINKLERS

ALTERNATE:
SIDEWALK SNOW MELT IN AREAS DEPICTED IN MECHANICAL PLANS

# SYMBOLS

1 A101 View Name 1/8" = 1'-0" — DRAWING TITLE & SCALE
Ref 1 A101 — EXTERIOR ELEVATION
1 A101 1 1 1 — INTERIOR ELEVATION
SIM 1 A101 — WALL SECTION & PARTIAL SECTION
SIM 1 A101 — DETAIL SECTION
AREA ENLARGEMENT
1i — PARTITION OR WALL TYPE
101 — DOOR TAG SIZE AS DESIGNATED ON DOOR SCHDULE
1t — WINDOW TAG ALL WINDOWS ARE TO BE HINGED PER EXTERIOR ELEVATION DRAWINGS
1 — REVISION NUMBER
7 — KEYNOTE TAG
LEVEL 1 124' - 0" — ELEVATION
+124' - 0" — SPOT ELEVATION

# DATUM REFERENCE

DATUM REFERENCE FOR THIS PROJECT IS THE MAIN FINISH FLOOR LEVEL
T.O. GYPCRETE = EL. 100'-0" ON ALL OTHER DRAWINGS EQUALS 6851.2' ON SITE PLAN

# COPYRIGHT

The drawings, specifications and other documents prepared by the Architect (TAB Associates, Inc.) for this Project are instruments of the Architect's service for use solely with respect to this Project and, unless otherwise provided in writing, the Architect shall be deemed the sole and exclusive author of these documents and shall retain, without limitation, all common law, statutory and other reserved rights, including the copyright hereof. No person, whether having come rightly into possession hereof or otherwise, shall employ these documents on any other project, nor for additions to this Project nor for the completion of this Project by others, unless with the prior express written consent of the Architect and upon appropriate compensation to the Architect in an amount and kind satisfactory to the Architect. The Architect expressly claims all proprietary rights in the material which is issued in confidence for design and / or construction purposes of this Project as noted. These materials may not be copied, modified, nor employed in any way without the specific prior written consent and permission of the Architect. TAB Associates, Inc. All rights reserved. If this project is photographed for any reason (sales, developer and contractor brochures included), the photographer is to provide TAB Associates, Inc. with all images for use by TAB Associates, Inc. for its website (www.tabassociates.com) only. If TAB Associates, Inc. desires to use any image in an advertising publication (magazine or magazine supplement), TAB Associates, Inc. will pay the photographer a reasonable fee for such use.

RCRBD Record Set
T.A.
05/14/2020

TAB Associates
*The Architectural Balance*
0056 Edwards Village Blvd.
Suite 210
Edwards, CO 81632
(970) 766-1470
fax: (970) 766-1471
email: tab@vail.net
www.tabassociates.com

Civil Engineer
Alpine Engineering, Inc.
970-926-3373
Structural Engineer
JH Structural Engineers
303-318-6539
Mechanical Engineer
BG BuildingWorks, Inc.
970-949-6108
Electrical Engineer
BG BuildingWorks, Inc.
970-949-6108

Seal

# Strawberry Park Elementary
# 39620 Amethyst Drive
## Steamboat Springs, CO

Revisions:

| No | Description | Date |
|---|---|---|
| | | |

Issue Dates:
Concept - 11/19/2019
SD's - 1/13/20
DD's - 2/20/20
95% - 03/30/20
CDs - 04/06/20

Sheet Title:
**Index Sheet**

Project No:
1935.02

Sheet No:
A0.01

Existing Building Code Review - Summary - IBC Occupancy - Rooms

| Name | Number | Area | Chapter 29 Occupancy Plumbing Description - Rooms | Chapter 10 - Function of Space - Rooms | Occupancy Type | Occupancy Group | Occupant Load Ratio | Number of Occupants | Net/Gross |
|---|---|---|---|---|---|---|---|---|---|
| PLAYGROUND | 24 | 2313.02 SF | (none) | (none) | | | | | |
| EX EQUIP | 37 | 392.02 SF | Educational facilities | (none) | Educational | E | | | |
| (E) VESTIBULE | A1 | 239.45 SF | Educational facilities | (none) | Educational | E | | | |
| (E) SECURITY | A1A | 150.12 SF | Educational facilities | Business Areas | Educational | E | 100 | 1.50 | GROSS |
| (E) GYM | A2 | 4520.82 SF | Educational facilities | Assembly without fixed seats - (chairs only-not fixed) | Educational | E | 5 | 904.16 | NET |
| (E) MECH | A3 | 96.00 SF | Educational facilities | Accessory storage area, mechanical equipment room | Educational | E | 300 | 0.32 | GROSS |
| STORAGE | A4 | 153.01 SF | Educational facilities | Accessory storage area, mechanical equipment room | Educational | E | 300 | 0.51 | GROSS |
| KILN | A6 | 33.58 SF | Educational facilities | Accessory storage area, mechanical equipment room | Educational | E | 300 | 0.11 | GROSS |
| (E) STORAGE | A7 | 197.33 SF | Educational facilities | Accessory storage area, mechanical equipment room | Educational | E | 300 | 0.66 | GROSS |
| (E) STORAGE | A8 | 245.33 SF | Educational facilities | Accessory storage area, mechanical equipment room | Educational | E | 300 | 0.82 | GROSS |
| (E) STG | A11 | 115.67 SF | Educational facilities | Accessory storage area, mechanical equipment room | Educational | E | 300 | 0.39 | GROSS |
| (E) MECH | A12 | 129.13 SF | Educational facilities | Accessory storage area, mechanical equipment room | Educational | E | 300 | 0.43 | GROSS |
| (E) STORAGE | A14 | 125.00 SF | Educational facilities | Accessory storage area, mechanical equipment room | Educational | E | 300 | 0.42 | GROSS |
| HALL | A15 | 176.76 SF | Educational facilities | (none) | Educational | E | | | |
| (E) MAINTENANCE | A16 | 198.40 SF | Educational facilities | Accessory storage area, mechanical equipment room | Educational | E | 300 | 0.66 | GROSS |
| CAFETERIA | A17 | 2538.77 SF | Educational facilities | Assembly without fixed seats - Concentrated | Educational | E | 7 | 362.68 | NET |
| WET AREA | A18 | 111.00 SF | Educational facilities | Accessory storage area, mechanical equipment room | Educational | E | 300 | 0.37 | GROSS |
| MUSIC | A19 | 955.39 SF | Educational facilities | Educational - Classroom area | Educational | E | 20 | 47.77 | NET |
| KITCHEN | A21 | 415.56 SF | Educational facilities | Kitchens, commercial | Educational | E | 200 | 2.08 | GROSS |
| RR | A22 | 81.88 SF | Educational facilities | Accessory storage area, mechanical equipment room | Educational | E | 300 | 0.27 | GROSS |
| ART | A23 | 830.72 SF | Educational facilities | Educational - Classroom area | Educational | E | 20 | 41.54 | NET |
| (E) SPED | A25 | 273.71 SF | Educational facilities | Educational - Shops and other vocational room areas | Educational | E | 50 | 5.47 | NET |
| (E) SPED | A26 | 80.29 SF | Educational facilities | Educational - Shops and other vocational room areas | Educational | E | 50 | 1.61 | NET |
| (E) SPED | A28 | 328.72 SF | Educational facilities | Educational - Shops and other vocational room areas | Educational | E | 50 | 6.57 | NET |
| (E) SPED | A30 | 209.09 SF | Educational facilities | Educational - Shops and other vocational room areas | Educational | E | 50 | 4.18 | NET |
| (E) SPED | A31 | 201.49 SF | Educational facilities | Educational - Shops and other vocational room areas | Educational | E | 50 | 4.03 | NET |
| (E) SPED | A32 | 208.56 SF | Educational facilities | Educational - Shops and other vocational room areas | Educational | E | 50 | 4.17 | NET |
| (E) BOYS | A34 | 12.44 SF | Educational facilities | (none) | Educational | E | | | |
| (E) GIRLS | A35 | 104.30 SF | Educational facilities | (none) | Educational | E | | | |
| (E) VESTIBULE | A36 | 116.95 SF | Educational facilities | (none) | Educational | E | | | |
| (E) FIFTH | A37 | 820.35 SF | Educational facilities | Educational - Classroom area | Educational | E | 20 | 41.02 | NET |
| (E) FIFTH | A38 | 790.22 SF | Educational facilities | Educational - Classroom area | Educational | E | 20 | 39.51 | NET |
| (E) FOURTH | A39 | 820.35 SF | Educational facilities | Educational - Classroom area | Educational | E | 20 | 41.02 | NET |
| (E) FOURTH | A40 | 785.41 SF | Educational facilities | Educational - Classroom area | Educational | E | 20 | 39.27 | NET |
| (E) FOURTH | A41 | 820.35 SF | Educational facilities | Educational - Classroom area | Educational | E | 20 | 41.02 | NET |
| (E) FOURTH | A42 | 790.04 SF | Educational facilities | Educational - Classroom area | Educational | E | 20 | 39.50 | NET |
| (E) WORK ROOM | A43 | 1417.85 SF | Educational facilities | Educational - Classroom area | Educational | E | 20 | 70.89 | NET |
| (E) VESTIBULE | A45 | 65.88 SF | Educational facilities | (none) | Educational | E | | | |
| (E) VESTIBULE | A46 | 194.75 SF | Educational facilities | (none) | Educational | E | | | |
| (E) ARCADE | A47 | 5367.97 SF | Educational facilities | (none) | Educational | E | | | |
| (E) WORK ROOM | A49 | 1417.89 SF | Educational facilities | Educational - Classroom area | Educational | E | 20 | 70.89 | NET |
| (E) FOURTH | A102 | 1357.94 SF | Educational facilities | Educational - Classroom area | Educational | E | 20 | 67.90 | NET |
| (E) FRONT OFFICE | B2 | 486.49 SF | Educational facilities | Business Areas | Educational | E | 100 | 4.86 | GROSS |
| (E) OFFICE | B3 | 185.55 SF | Educational facilities | Business Areas | Educational | E | 100 | 1.86 | GROSS |
| (E) VESTIBULE | B4 | 94.75 SF | Educational facilities | (none) | Educational | E | | | |
| (E) TOILET | B5 | 34.27 SF | Educational facilities | (none) | Educational | E | | | |
| (E) KINDER | B6 | 922.59 SF | Educational facilities | Educational - Classroom area | Educational | E | 20 | 46.13 | NET |
| (E) SPANISH | B7 | 811.76 SF | Educational facilities | Educational - Classroom area | Educational | E | 20 | 40.59 | NET |
| (E) KINDER | B8 | 820.35 SF | Educational facilities | Educational - Classroom area | Educational | E | 20 | 41.02 | NET |
| (E) OFFICE | B9 | 253.74 SF | Educational facilities | Business Areas | Educational | E | 100 | 2.54 | GROSS |
| (E) BREAKOUT | B10 | 1578.74 SF | Educational facilities | (none) | Educational | E | | | |
| (E) GIRLS | B11 | 37.67 SF | Educational facilities | (none) | Educational | E | | | |
| (E) BOYS | B12 | 52.06 SF | Educational facilities | (none) | Educational | E | | | |
| (E) GIRLS | B13 | 60.04 SF | Educational facilities | (none) | Educational | E | | | |
| (E) BOYS | B14 | 78.21 SF | Educational facilities | (none) | Educational | E | | | |
| (E) HEALTH | B15 | 162.76 SF | Educational facilities | Business Areas | Educational | E | 100 | 1.63 | GROSS |
| (E) FIRST AID | B16 | 97.93 SF | Educational facilities | Business Areas | Educational | E | 100 | 0.98 | GROSS |
| (E) TOILET | B17 | 49.64 SF | Educational facilities | (none) | Educational | E | | | |
| (E) MECH | B18 | 37.58 SF | Educational facilities | Accessory storage area, mechanical equipment room | Educational | E | 300 | 0.13 | GROSS |
| (E) CLINIC | B19 | 173.29 SF | Educational facilities | Business Areas | Educational | E | 100 | 1.73 | GROSS |
| (E) COUNSELOR | B21 | 132.09 SF | Educational facilities | Business Areas | Educational | E | 100 | 1.32 | GROSS |
| (E) COUNSELOR | B22 | 131.05 SF | Educational facilities | Business Areas | Educational | E | 100 | 1.31 | GROSS |
| (E) COUNSELOR | B24 | 98.18 SF | Educational facilities | Business Areas | Educational | E | 100 | 0.98 | GROSS |
| (E) WORK ROOM | B25 | 318.90 SF | Educational facilities | Business Areas | Educational | E | 100 | 3.19 | GROSS |
| (E) SPED | B26 | 599.59 SF | Educational facilities | Educational - Shops and other vocational room areas | Educational | E | 50 | 11.99 | NET |
| (E) OFFICE | B27 | 129.83 SF | Educational facilities | Business Areas | Educational | E | 100 | 1.30 | GROSS |
| (E) TEACHERS LOUNGE | B28 | 749.75 SF | Educational facilities | (none) | Educational | E | | | |
| (E) STORAGE | B30 | 271.85 SF | Educational facilities | Accessory storage area, mechanical equipment room | Educational | E | 300 | 0.91 | GROSS |
| (E) OFFICE | B33 | 192.27 SF | Educational facilities | Business Areas | Educational | E | 100 | 1.92 | GROSS |
| (E) OFFICE | B34 | 160.07 SF | Educational facilities | Business Areas | Educational | E | 100 | 1.60 | GROSS |
| (E) LIBRARY | B35 | 2074.25 SF | Educational facilities | Library - Stack area | Educational | E | 100 | 20.74 | GROSS |
| (E) CONFERENCE | B36 | 109.53 SF | Educational facilities | Business Areas | Educational | E | 100 | 1.10 | GROSS |
| (E) STORAGE | B37 | 57.67 SF | Educational facilities | Accessory storage area, mechanical equipment room | Educational | E | 300 | 0.19 | GROSS |
| (E) GIFTED & TALENTED | B39 | 462.06 SF | Educational facilities | Educational - Classroom area | Educational | E | 20 | 23.10 | NET |
| (E) GIRLS | B40 | 69.98 SF | Educational facilities | (none) | Educational | E | | | |
| (E) BOYS | B41 | 103.78 SF | Educational facilities | (none) | Educational | E | | | |
| (E) VESTIBULE | B42 | 369.31 SF | Educational facilities | (none) | Educational | E | | | |
| (E) FIFTH | B43 | 820.72 SF | Educational facilities | Educational - Classroom area | Educational | E | 20 | 41.04 | NET |
| (E) FIFTH | B44 | 787.98 SF | Educational facilities | Educational - Classroom area | Educational | E | 20 | 39.40 | NET |
| (E) THIRD | B45 | 818.04 SF | Educational facilities | Educational - Classroom area | Educational | E | 20 | 40.90 | NET |
| (E) THIRD | B46 | 784.12 SF | Educational facilities | Educational - Classroom area | Educational | E | 20 | 39.21 | NET |
| (E) THIRD | B47 | 811.24 SF | Educational facilities | Educational - Classroom area | Educational | E | 20 | 40.56 | NET |
| (E) THIRD | B48 | 780.01 SF | Educational facilities | Educational - Classroom area | Educational | E | 20 | 39.00 | NET |
| (E) ENTRY | C1 | 1084.91 SF | Educational facilities | (none) | Educational | E | | | |
| PRE-K CLASSROOM | C2 | 640.03 SF | Educational facilities | Educational - Classroom area | Educational | E | 20 | 32.00 | NET |
| PRE-K CLASSROOM | C3 | 638.32 SF | Educational facilities | Educational - Classroom area | Educational | E | 20 | 31.92 | NET |
| (E) VESTIBULE | C4 | 97.80 SF | Educational facilities | (none) | Educational | E | | | |
| (E) FIRST | C5 | 805.22 SF | Educational facilities | Educational - Classroom area | Educational | E | 20 | 40.26 | NET |
| (E) FIRST | C6 | 785.81 SF | Educational facilities | Educational - Classroom area | Educational | E | 20 | 39.29 | NET |
| (E) PROJECT AREA | C7 | 3157.32 SF | Educational facilities | (none) | Educational | E | | | |
| (E) SPED/ ELL | C8 | 813.93 SF | Educational facilities | Educational - Shops and other vocational room areas | Educational | E | 50 | 16.28 | NET |
| (E) TECH | C9 | 785.81 SF | Educational facilities | Educational - Classroom area | Educational | E | 20 | 39.29 | NET |
| (E) SECOND | C10 | 805.22 SF | Educational facilities | Educational - Classroom area | Educational | E | 20 | 40.26 | NET |
| (E) VESTIBULE | C11 | 97.80 SF | Educational facilities | (none) | Educational | E | | | |
| (E) SECOND | C12 | 806.37 SF | Educational facilities | Educational - Classroom area | Educational | E | 20 | 40.32 | NET |
| (E) SECOND | C13 | 824.89 SF | Educational facilities | Educational - Classroom area | Educational | E | 20 | 41.24 | NET |
| (E) SECOND | C14 | 776.65 SF | Educational facilities | Educational - Classroom area | Educational | E | 20 | 38.83 | NET |
| ENTRY | C15 | 186.66 SF | Educational facilities | (none) | Educational | E | | | |
| (E) SPED | C16 | 801.82 SF | Educational facilities | Educational - Shops and other vocational room areas | Educational | E | 50 | 16.04 | NET |
| (E) STORAGE | C17 | 145.00 SF | Educational facilities | Accessory storage area, mechanical equipment room | Educational | E | 300 | 0.48 | GROSS |
| (E) LAUNDRY | C18 | 129.93 SF | Educational facilities | Accessory storage area, mechanical equipment room | Educational | E | 300 | 0.43 | GROSS |
| (E) BOYS | C19 | 167.29 SF | Educational facilities | (none) | Educational | E | | | |
| (E) GIRLS | C20 | 125.09 SF | Educational facilities | (none) | Educational | E | | | |
| STORAGE | C21 | 138.06 SF | Educational facilities | Accessory storage area, mechanical equipment room | Educational | E | 300 | 0.46 | GROSS |
| (E) KINDER | C22 | 1013.78 SF | Educational facilities | Educational - Classroom area | Educational | E | 20 | 50.69 | NET |
| (E) STAFF RR | C23 | 46.19 SF | Educational facilities | (none) | Educational | E | | | |
| STORAGE | C24 | 18.80 SF | Educational facilities | Accessory storage area, mechanical equipment room | Educational | E | 300 | 0.06 | GROSS |
| RR | C25 | 40.52 SF | Educational facilities | (none) | Educational | E | | | |
| KITCHEN | C26 | 98.47 SF | Educational facilities | Kitchens, commercial | Educational | E | 200 | 0.49 | GROSS |
| (E) STAGE | C27 | 815.10 SF | Educational facilities | Stages and platforms | Educational | E | 15 | 54.34 | NET |
| RR | C28 | 40.52 SF | Educational facilities | (none) | Educational | E | | | |
| Grand total: 111 | | | | | | | | 2775.65 | |

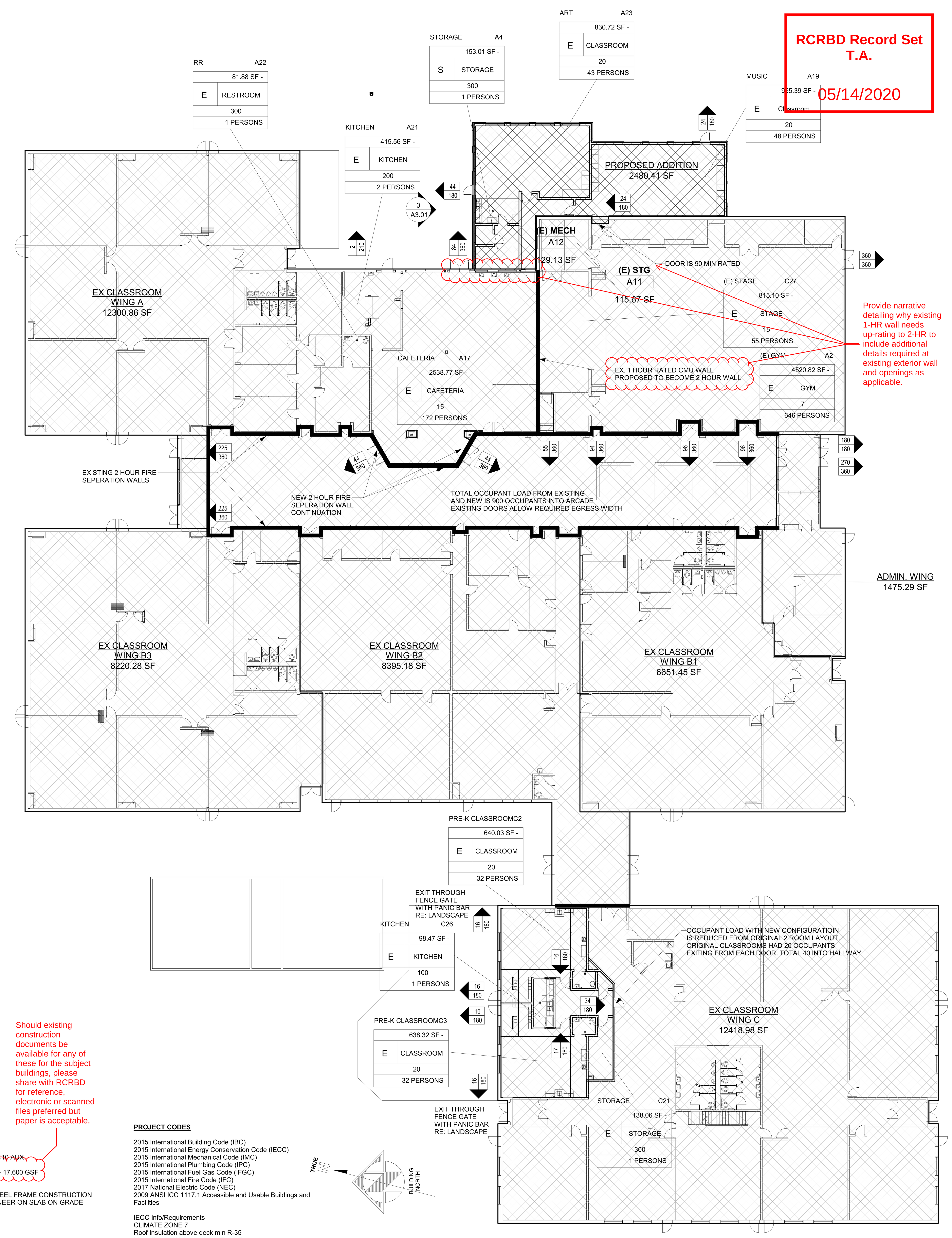


1 A0.02 BUILDING SEPARATIONS
1/16" = 1'-0"

**BUILDING INFORMATION**

| BUILDING | OCCUPANCY | TOTAL OCCUPANTS | EX. AREAS | NEW AREAS | MAX ALLOWABLE AREA | EXISTING CONST. TYPE | BUILDING HEIGHT | FIRE SUPPRESSION |
|---|---|---|---|---|---|---|---|---|
| ADMIN WING<br>ORIGINAL BLDG 1980 | B | | 1,476 SF | - | 14,500 SF | TYPE 2B ( IIB ) | EX | NO |
| GYM WING<br>ORIGINAL BLDG 1980 | A1/A3/E | | 6,807 SF | - | 58,000 SF | TYPE 2B ( IIB ) | EX | YES |
| CLASSROOM WING B1<br>ORIGINAL BLDG 1980 | E | | 6,512 SF | - | 14,500 SF | TYPE 2B ( IIB ) | EX | NO |
| CLASSROOM WING B2<br>ORIGINAL BLDG 1980 | E | | 8,396 SF | - | 14,500 SF | TYPE 2B ( IIB ) | EX | NO |
| CLASSROOM WING B3<br>ORIGINAL BLDG 1980 | E | | 8,221 SF | - | 14,500 SF | TYPE 2B ( IIB ) | EX | NO |
| CLASSROOM WING C<br>ADDITION 2007 | E | | 14,372 SF | - | 14,500 SF | TYPE 2B ( IIB ) | EX | NO |
| CLASSROOM WING A<br>ORINGAL BLDG 1980 | E | | 12,301 SF | - | 20,489.66(14,500 SF)<br>AREA INCREASE | TYPE 2B ( IIB ) | EX | NO |
| ADDITION TO WING A<br>NEW MUSIC/ART WING<br>PROPOSED ADDITION | E | | - | 2,481 SF | 20,489.66 SF | TYPE 2B ( IIB ) | EX | NO |
| TOTAL NEW AREA | | 2,481 SF | | | | | | |
| TOTAL AREA | | 60,566 SF | | | | | | |

EX. ART AND MUSIC ROOMS ARE TO BE DEMO'D TO BECOME THE CAFETERIA. PROPOSED ART AND MUSIC ROOMS ARE EQUAL SIZE TO THE EX. ART AND MUSIC ROOMS.

UNKNOWN IF RATED SEPARATION WALLS BETWEEN CLASSROOMS WINGS B1, B2, AND B3 EXIST BUT THIS AREA IS EXISTING NON-CONFORMING

Any discrepancy between the operational description and proposed function shall be accompanied with narrative of explanation with details of code references in reference to Sheet A0.02 and specifications (if applicable as no specifications were submitted.

**GENERAL PROJECT INFORMATION**

ADDRESS: 39620 AMETHYST DRIVE
STEAMBOAT SPRINGS, CO 80487
~~SQUARE FOOTAGE: 71,098 GSF 68,688 SF +2,410 AUX~~
YEAR BUILT: 1981
ADDITIONS TO FACILITY: 2007 CLASSROOMS - 17,600 GSF
~~NUMBER OF STORIES: 1~~
SITE AREA: 39.9 AC TOTAL CAMPUS
BUILDING CONSTRUCTION INFORMATION: STEEL FRAME CONSTRUCTION WITH METAL ROOF DECK AND MASONRY VENEER ON SLAB ON GRADE
TYPE OF CONSTRUCTION: TYPE IIB
SPRINKLED: PARTIAL - STAGE AND GYM

Should existing construction documents be available for any of these for the subject buildings, please share with RCRBD for reference, electronic or scanned files preferred but paper is acceptable.

**BUILDING AREA INCREASE FOR CLASSROOM AREA A**

ENTIRE LENGTH OF PERIMETER EXCEEDS 30' WIDTH IN FRONT OF PERIMETER LENGTH

MINIMUM FRONTAGE INCREASE
(507'-8 5/8" / 765'-8 3/8") - 0.25 = 0.41308

14,500' x 1.41308 = 20,489.66

EGRESS DOORS
ALL EGRESS DOORS TO THE EXTERIOR WILL HAVE FREE EGRESS WITH PANIC DEVICES.
DOORS WITH NOTED OCCUPANT LOAD OF 50 OR OVER WILL ALSO HAVE FREE EGRESS WITH PANIC DEVICE
ELECTRONIC DOOR LOCKS DO NOT HAMPER EGRESS

**PROJECT CODES**

2015 International Building Code (IBC)
2015 International Energy Conservation Code (IECC)
2015 International Mechanical Code (IMC)
2015 International Plumbing Code (IPC)
2015 International Fuel Gas Code (IFGC)
2015 International Fire Code (IFC)
2017 National Electric Code (NEC)
2009 ANSI ICC 1117.1 Accessible and Usable Buildings and Facilities

IECC Info/Requirements
CLIMATE ZONE 7
Roof Insulation above deck min R-35
Metal Framed Wall Insulation R-13+R-7.5ci
Below Grade Wall R-10c
Unheated Slabs R-15 for 24" Below

**SCHOOLTIME OCCUPANTS**

| | |
|---|---|
| TOTAL OCCUPANCY FROM ROOMS | 2757.06 OCCUPANTS |
| ACCESSORY OCCUPANTS | |
| GYM | 1067.18 |
| LIBRARY | 20.74 |
| CAFETERIA | 368.25 |
| GRAND TOTAL OCCUPANCY | 1300.89 |

**BATHROOM INFORMATION**

1301 OCCUPANTS SCHOOL HOURS

| CATEGORY | WATER CLOSETS | LAVATORIES | DRINKING FOUNTAINS | OTHER |
|---|---|---|---|---|
| REQUIRED | 1 PER 50 = 27 | 1 PER 50 = 27 | 1 PER 100 = 14 | 1 SERVICE SINK |
| EXISTING | 23 + 12 URINALS | 28 | 7 EX - 5 NEW | 1 NEW |

Provide a narrative to explain calculation of occupants (total from all rooms, accessory and what grand total entails). Show that total of water closets, lavatories and service sinks that are to be provided is per IBC Chapter 29 to include provisions for accessibility of separate facilities for males and females, as applicable.

TAB
Associates
*The Architectural Balance*


0056 Edwards Village Blvd.
Suite 210
Edwards, CO 8132
(970) 766-1470
fax: (970) 766-1471
email: tab@vail.net
www.tabassociates.com

Civil Engineer
Alpine Engineering, Inc.
970-926-3373
Structural Engineer
JH Structural Engineers
303-318-6539
Mechanical Engineer
BG BuildingWorks, Inc.
970-949-6108
Electrical Engineer
BG BuildingWorks, Inc.
970-949-6108


Seal
STATE OF COLORADO
GREGORY S. MACIK
30583
04/06/20
LICENSED ARCHITECT

# Strawberry Park Elementary
## 39620 Amethyst Drive
### Steamboat Springs, CO

Revisions:

| No | Description | Date |
|---|---|---|
| | | |

Issue Dates:
Concept - 11/19/2019
SD's - 1/13/20
DD's - 2/20/20
95% - 03/30/20
CDs - 04/06/20

Sheet Title:
**Code Summary**

Project No:
1935.02

Sheet No:
A0.02

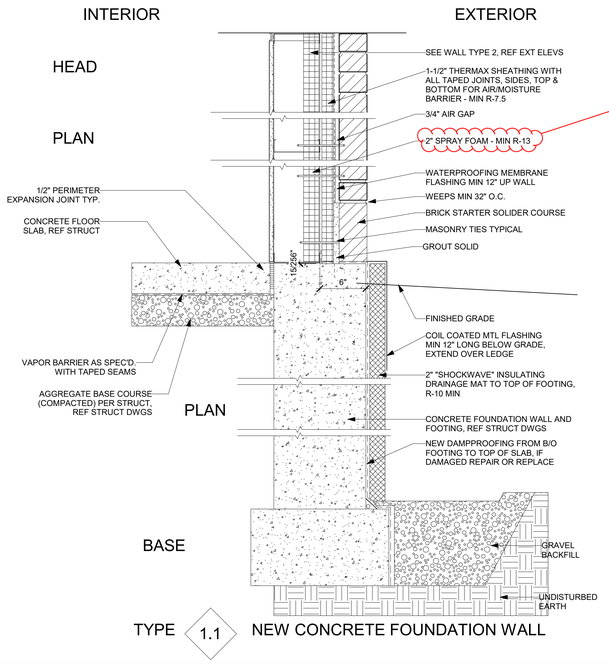


While there are exceptions, combustible materials shall not be permitted in concealed spaces of buildings of Type I or II construction. Please furnish explain how material(s) material testing to comply with IBC 603.1 Allowable materials use of combustible materials in concealed spaces of buildings of Type I or II construction shall be limited to the applications indicated in Section 718.5 (similar to Thermax ESR 1659 for foam plastic insulation).

GENERAL SOUND ISOLATING NOTES AND SPECIFICATIONS:

1. SEALANTS SHOUDL BE SIMILAR TO PECORA AIS-919 IN AC-20 FTR(FIRE RATING WALLS)
2. SHARED CLASSROOM WALS OR OTHER SOUND WALL TYPES: ALL GAPS AROUND PIPES AND CONDUIT PENETRATIONS, AND AROUND ELECTRICAL BOXES SHOULD BE CAULKED AIRTIGHT. ALL ELECTRICAL BOXES (INCLUDING LOW VOLTAGE BOXES) AND ANY FLOOR BOXES IN A SOUND ISOLATING PARTITION SHOULD BE BACKED WITH PUTTY PADS SUCH AS HILTI CP 617 FIRE-SOAP PUTTY PADS OR EQUIVALENT.
3. SOUND ISOLATING GYPSUM BOARD PARTITIONS SHOUDL BE INSTALLED PER ASTM C919-12, STANDARD PRACTICE FOR USE OF SEALANTS IN ACOUSTICAL APPLICATIONS.

RCRBD Record Set
T.A.
05/14/2020

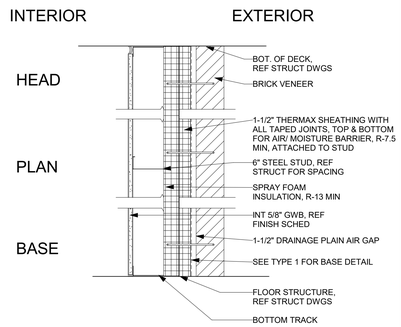


TYPE 2 EXTERIOR WALL TYPE

TYPE 2G SIM TO TYPE 2, EXCEPT SUBSTITUTE MOISTURE RESISTANT 5/8" GYP BOARD AT WET AREAS BEHIND TILE, WITH 5-1/2" SOUND ATTENUATION BATT

INTERIOR EXTERIOR

NOT USED

TYPE 2.1 EXTERIOR WALL TYPE

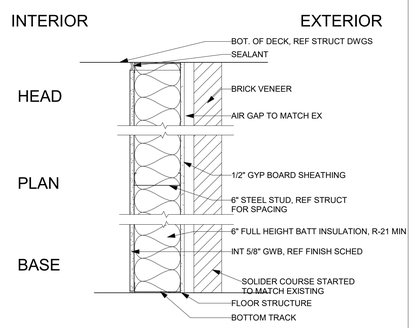


TYPE 2.2 EXISTING EXTERIOR WALL INFILL TYPE

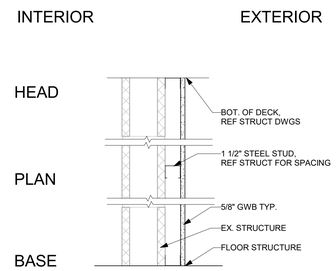


TYPE 3.1 TYPICAL FURRING INTERIOR PARTITION

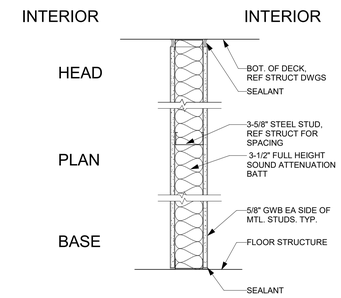


TYPE 4 INTERIOR PARTITION

TYPE 4G SIM TO TYPE 4, EXCEPT SUBSTITUTE MOISTURE RESISTANT 5/8" GYP BOARD AT WET AREAS BEHIND TILE

TYPE 4R SIM TO TYPE 4, EXCEPT SUBSTITUTE 5/8" TYP "X" GYP BOARD BOTH SIDES OF WALL FROM FLOOR TO UNDERSIDE OF STRUCTURE, TO PROVIDE 1 HOUR FIRE RATING PER UL U465

TYPE 4P SIM TO TYPE 4, EXCEPT SUBSTITUTE FRP WITH INTEGRAL BACKING AT NOTED SIDE OF WALL, REF FRAMING PLANS

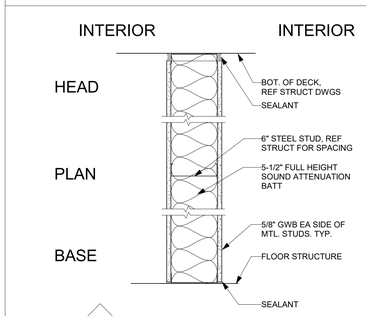


TYPE 5 TYPICAL INTERIOR PARTITION

TYPE 5G SIM TO TYPE 5, EXCEPT SUBSTITUTE MOISTURE RESISTANT 5/8" GYP BOARD AT WET AREAS BEHIND TILE

TYPE 5R SIM TO TYPE 5, EXCEPT SUBSTITUTE 5/8" TYPE "X" GYP BOARD BOTH SIDES OF WALL FROM FLOOR TO UNDERSIDE OF STRUCTURE, TO PROVIDE 1 HOUR FIRE RATING PER UL U465

TYPE 5P SIM TO TYPE 5, EXCEPT SUBSTITUTE FRP WITH INTEGRAL BACKING AT NOTED SIDE OF WALL, REF FRAMING PLANS

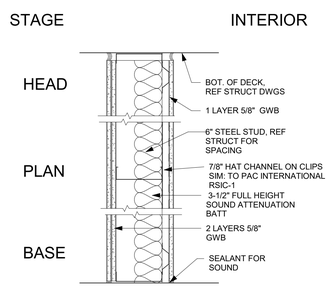


TYPE 7 SOUND WALL

TYPE 7R SIM TO TYPE 14, EXCEPT SUBSTITUTE 5/8" TYP "X" GYP BOARD BOTH SIDES OF WALL FROM FLOOR TO UNDERSIDE OF STRUCTURE, TO PROVIDE 1 HOUR FIRE RATING PER UL U465

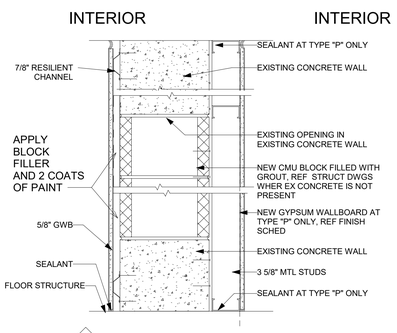


TYPE 9.1 NEW INT CMU INFILL WALL W/ GWB

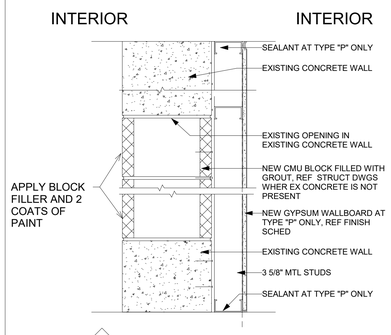


TYPE 9.2 NEW INT CMU INFILL WALL

TYPE 9.2P SIM TO TYPE 21, EXCEPT WITH NEW GYPSUM WALLBOARD FURRED OUT AS SHOWN IN DETAIL AND NOTES ABOVE. SE PLANS FOR FRP LOCATIONS.

TYPE 9.2E EXISTING SIM WALL - NEW FRP

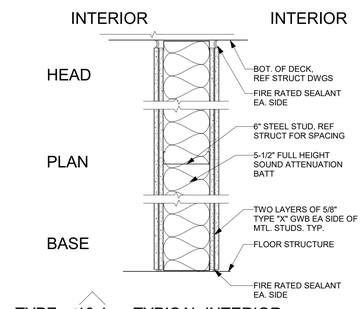


TYPE 10.1 TYPICAL INTERIOR PARTITION

UL DESIGN: U411


TAB Associates
*The Architectural Balance*
0056 Edwards Village Blvd.
Suite 210
Edwards, CO 81632
(970) 766-1470
fax: (970) 766-1471
email: tab@vail.net
www.tabassociates.com

Civil Engineer
Alpine Engineering, Inc.
970-926-3373
Structural Engineer
JH Structural Engineers
303-318-6539
Mechanical Engineer
BG BuildingWorks, Inc.
970-949-6108
Electrical Engineer
BG BuildingWorks, Inc.
970-949-6108


Seal

# Strawberry Park Elementary
## 39620 Amethyst Drive
Steamboat Springs, CO

Revisions:

| No | Description | Date |
|---|---|---|
| | | |

Issue Dates:
Concept - 11/19/2019
SD's - 1/13/20
DD's - 2/20/20
95% - 03/30/20
CDs - 04/06/20

Sheet Title:
**Wall Types**

Project No:
1935.02

Sheet No:
A0.03

RCRBD Record Set
T.A.
05/14/2020

## DOOR SCHEDULE

| DOOR NO. | LOCATION FROM ROOM | LOCATION TO ROOM | WIDTH | HEIGHT | THICKNESS | DOOR TYPE | DOOR MATERIAL | DOOR FINISH | FRAME TYPE | FRAME MATERIAL | FRAME FINISH | FRAME THICKNESS | GLASS TYPE | HEAD | JAMB | SILL | FIRE RATING | HDWR | REMARKS |
|---|---|---|---|---|---|---|---|---|---|---|---|---|---|---|---|---|---|---|---|
| A17B | (E) ARCADE | CAFETERIA | 6' - 0" | 7' - 0" | 1 3/4" | 6 | HM | PT | 2 | HM | PT | 9 1/2" | TEMPERED, FIRE RATED | 5/A5.60 | 5/A5.60 | 14/A5.60 | 2 HR | 03 | 2 HOUR FIRE RATED, SOUND SEALS |
| A17C | CAFETERIA | (E) ARCADE | 6' - 0" | 7' - 0" | 1 3/4" | 6 | HM | PT | 2 | HM | PT | 91/2" | TEMPERED, FIRE RATED | 5/A5.60 | 5/A5.60 | 14/A5.60 | 2 HR | 03 | 2 HOUR FIRE RATED, SOUND SEALS |
| A17D | CAFETERIA | | 6' - 0" | 7' - 0" | 1 3/4" | 6 | SF | MFG | 7 | SF | MFG | 4 1/2" | INSULATED | 2/A5.61 | 2/A5.61 SIM | 9/A5.60 | --- | AL-01 | KEY CARD ACCESS |
| A17E | CAFETERIA | HALL | 3' - 0" | 7' - 0" | 1 3/4" | 3 | WD | ST | 3 | HM | PT | 9 1/2" | | 5/A5.60 | 5/A5.60 | --- | --- | 04 | 2 HOUR FIRE RATED |
| A19A | HALL | MUSIC | 3' - 0" | 7' - 0" | 1 3/4" | 3 | WD | ST | 3 | HM | PT | 9 3/4" | | 5/A5.60 | 5/A5.60 | --- | --- | 05 | |
| A19B | | MUSIC | 3' - 0" | 7' - 0" | 1 3/4" | 1 | HM | PT | EX | EHM | PT | --- | | --- | --- | --- | --- | 06 | SOUND SEALS |
| A19C | MUSIC | | 3' - 0" | 7' - 0" | 1 3/4" | 5 | SF | MFG | 6 | SF | MFG | 4 1/2" | | --- | --- | --- | --- | 01 | |
| A21A | KITCHEN | | 3' - 6" | 7' - 0" | 1 3/4" | 1 | HM | PT | 3 | HM | PT | 12 1/2" VIF | | 1/A5.61 | 1/A5.61 SIM | 9/A5.60 SIM | --- | 2 | KEY CARD ACCESS |
| A21B | KITCHEN | CAFETERIA | 3' - 0" | 2' - 6" | 1 3/4" | 7 | WD | ST | --- | --- | --- | -- | | -- | -- | --- | --- | 7 | |
| A22A | (E) SPED | RR | 3' - 0" | 7' - 0" | 1 3/4" | 1 | HM | PT | EX | EHM | PT | 8 1/4" | | -- | -- | --- | --- | EX-02 | |
| A23A | ART | | 3' - 0" | 7' - 0" | 1 3/4" | 5 | SF | MFG | 6 | SF | MFG | 4 1/2" | INSULATED | 10/A5.60 | 12/A5.60 | 9/A5.60 | --- | 01 | |
| A23B | HALL | ART | 3' - 0" | 7' - 0" | 1 3/4" | 3 | WD | ST | 3 | HM | PT | 9 3/4" | | 5/A5.60 | 5/A5.60 | --- | --- | 09.01 | |
| A23C | WET AREA | STORAGE | 3' - 0" | 7' - 0" | 1 3/4" | 1 | HM | PT | 3 | HM | PT | 8 1/4" | | 5/A5.60 | 5/A5.60 | --- | --- | 08 | |
| A24A | KILN | STORAGE | 3' - 0" | 7' - 0" | 1 3/4" | 1 | HM | PT | 3 | HM | PT | 8 1/4" | | 5/A5.60 | 5/A5.60 | --- | --- | 08 | |
| C15A | (E) PROJECT AREA | ENTRY | 3' - 0" | 7' - 0" | 1 3/4" | 3 | WD | ST | 3 | HM | PT | 8 1/4" | | 5/A5.60 | 5/A5.60 | --- | --- | 04.01 | |
| C15B | | | 3' - 6" | 4' - 0" | 1 3/4" | 1 | HM | PT | 1 | HM | PT | 4 1/2" | | A5.41 | A5.41 | A5.41 | --- | 01.01 | MECH PENTHOUSE ACCESS DOOR |
| C20A | STORAGE | ENTRY | 3' - 0" | 7' - 0" | 1 3/4" | 1 | WD | ST | 3 | HM | PT | 8 1/4" | | 5/A5.60 | 5/A5.60 | --- | --- | 10 | |
| C21A | ENTRY | STORAGE | 3' - 0" | 7' - 0" | 1 3/4" | 1 | WD | ST | 3 | HM | PT | 8 1/4" | | 5/A5.60 | 5/A5.60 | --- | --- | 10 | |
| C22A | ENTRY | PRE-K CLASSROOM | 3' - 0" | 7' - 0" | 1 3/4" | 3 | WD | ST | 3 | HM | PT | 8 1/4" | | 5/A5.60 | 5/A5.60 | --- | --- | 09 | |
| C23A | PRE-K CLASSROOM | RR | 3' - 7" | 7' - 6" | 1 3/4" | 1 | WD | ST | 4 | --- | --- | 8 1/4" | | 1/A5.60 | 2/A5.60 | --- | --- | BD-01 | BARN DOOR, FRAME HAS NO STEP |
| C24A | PRE-K CLASSROOM | ENTRY | 3' - 0" | 7' - 0" | 1 3/4" | 3 | WD | ST | 3 | HM | PT | 8 1/4" | | 5/A5.60 | 5/A5.60 | --- | --- | 09 | |
| C25A | PRE-K CLASSROOM | RR | 3' - 7" | 7' - 6" | 1 3/4" | 1 | WD | ST | 4 | --- | --- | 8 1/4" | | 1/A5.60 | 2/A5.60 | --- | --- | BD-01 | BARN DOOR, FRAME HAS NO STEP |
| C26A | KITCHEN | PRE-K CLASSROOM | 3' - 6" | 7' - 0" | 1 3/4" | 1 | WD | ST | 5 | HM | PT | 8 1/4" | | 4/A5.60 | 6+7/A5.60 | --- | --- | PD-01 | POCKET DOOR |
| C26B | PRE-K CLASSROOM | KITCHEN | 3' - 6" | 7' - 0" | 1 3/4" | 1 | WD | ST | 5 | HM | PT | 8 1/4" | | 4/A5.60 | 6+7/A5.60 | --- | --- | PD-01 | POCKET DOOR |
| EA17A | (E) ARCADE | CAFETERIA | 3' - 0" | 7' - 0" | 1 3/4" | 6 | HM | PT | EX | EHM | PT | -- | | 5/A5.60 | 5/A5.60 | --- | 2 HR | 05.1 | 2 HOUR FIRE RATED, SOUND SEALS |
| EC22B | PLAYGROUND | PRE-K CLASSROOM | 3' - 0" | 7' - 0" | 1 3/4" | EX | EX | EX | EX | EX | EX | -- | | -- | -- | -- | --- | EX-01 | |
| EC24B | PRE-K CLASSROOM | PLAYGROUND | 3' - 0" | 7' - 0" | 1 3/4" | EX | EX | EX | EX | EX | EX | -- | | -- | -- | -- | --- | EX-01 | |

## WINDOW SCHEDULE

| WINDOW NO | DESCRIPTION | WIDTH | HEIGHT | FINISH | COMMENTS |
|---|---|---|---|---|---|
| 1 | SF | 6' - 0" | 6' - 0" | MFG | |
| 2 | SF | 6' - 0" | 6' - 0" | MFG | |
| 3 | SF | 6' - 0" | 2' - 0" | MFG | |
| 4 | SF | 6' - 0" | 5' - 4" | MFG | V.I.F. SIZE |
| 5 | HM | 5' - 0" | 3' - 9" | PT | ONE WAY GLAZING |
| 6 | HM | 8' - 0" | 6' - 0" | PT | 2 HOUR FIRE RATED GLAZING |

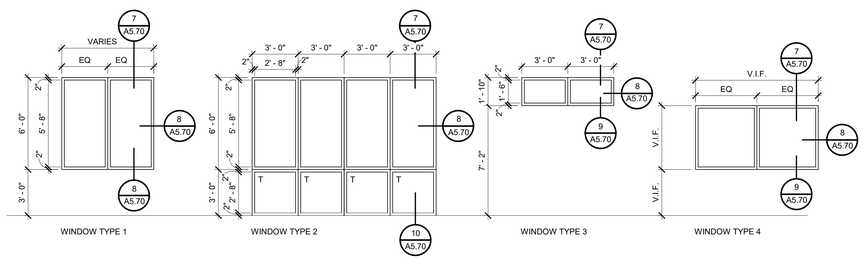


WINDOW TYPE 1 | WINDOW TYPE 2 | WINDOW TYPE 3 | WINDOW TYPE 4

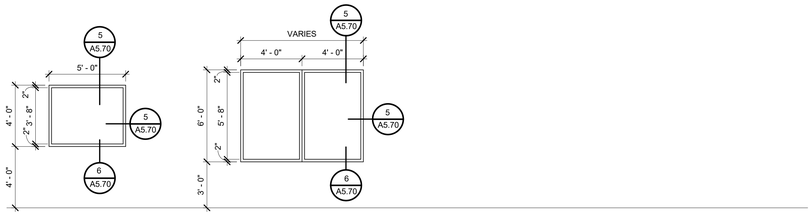


WINDOW TYPE 5
ONE-WAY GLASS
MIRRORED SIDE ON
CUBBIE SIDE

WINDOW TYPE 6
2 HOUR RATED

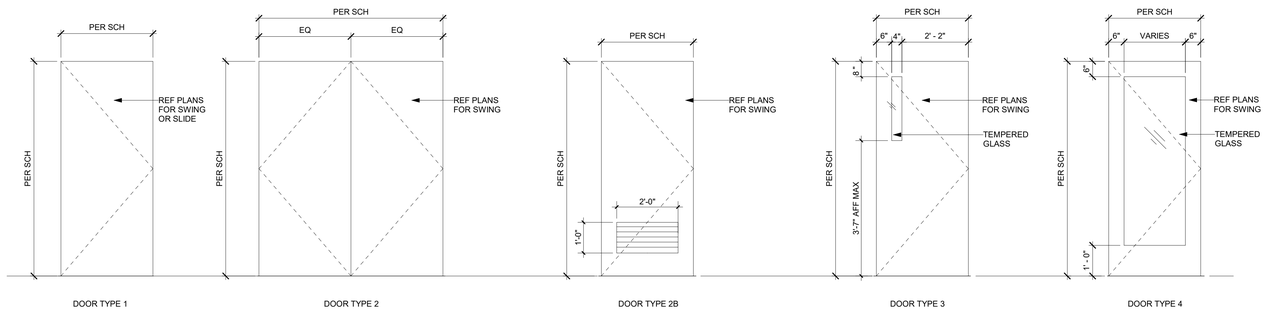


DOOR TYPE 1 | DOOR TYPE 2 | DOOR TYPE 2B | DOOR TYPE 3 | DOOR TYPE 4

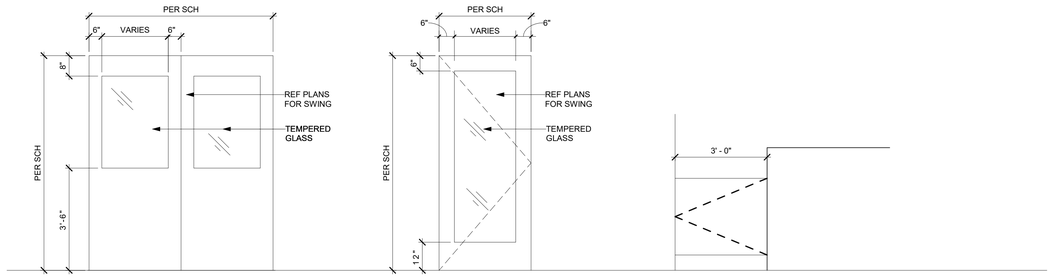


DOOR TYPE 5 | DOOR TYPE 6 | DOOR TYPE 7
LAMINATED
HALF DOOR -
DOUBLE SWING

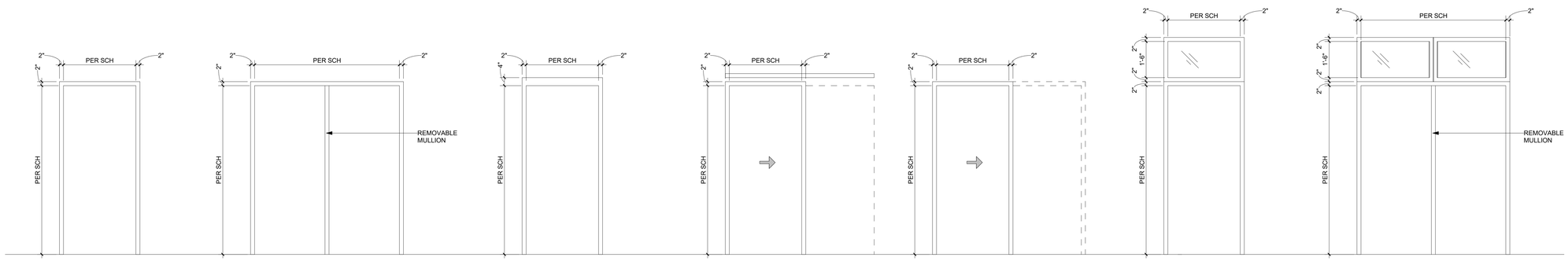


FRAME TYPE 1 | FRAME TYPE 2 | FRAME TYPE 3 | FRAME TYPE 4
BARN | FRAME TYPE 5
POCKET | FRAME TYPE 6 | FRAME TYPE 7


TAB Associates
*The Architectural Balance*
0056 Edwards Village Blvd.
Suite 210
Edwards, CO 81632
(970) 766-1470
fax: (970) 766-1471
email: tab@vail.net
www.tabassociates.com

Civil Engineer
Alpine Engineering, Inc.
970-926-3373
Structural Engineer
JH Structural Engineers
303-318-6539
Mechanical Engineer
BG BuildingWorks, Inc.
970-949-6108
Electrical Engineer
BG BuildingWorks, Inc.
970-949-6108


Seal

# Strawberry Park Elementary
## 39620 Amethyst Drive
Steamboat Springs, CO

Revisions:

| No | Description | Date |
|---|---|---|
| | | |

Issue Dates:
Concept - 11/19/2019
SD's - 1/13/20
DD's - 2/20/20
95% - 03/30/20
CDs - 04/06/20

Sheet Title:
**Door and Window Schedules**

Project No:
1935.02

Sheet No:
A0.04

RCRBD Record Set
T.A.
05/14/2020

## COLOR AND MATERIALS SCHEDULE - BASIS OF DESIGN

| SYMBOL | GENERAL_ LOCATION | MANUFACTURER | PRODUCT NAME | COLOR / FINISH | SIZE | REMARKS | HEADER |
|---|---|---|---|---|---|---|---|
| ACOUSTIC PANEL CEILING | | | | | | | |
| APC-1 | CLASSROOMS/CAFETERIA | ARMSTRONG | FINE FISSURED-HIGH ACOUSTICS SQUARE LAY-IN - 1714 | WHITE W/ WHITE GRID | 24" x 48"x3/4" | NRC: 70 | ACOUSTIC PANEL CEILING |
| APC-2 | LEARNING COMMONS CLOUDS | ARMSTRONG | FINE FISSURED-HIGH ACOUSTICS SQUARE LAY-IN - 1714 | WHITE W/ WHITE GRID | 24" x 48"x3/4" | CLOUD EDGE - 6" AXIOM | ACOUSTIC PANEL CEILING |
| ACOUSTIC WALL PANEL | | | | | | | |
| AWP-1 | CAFTERIA | SOUNDPLY | RF M25 | BLACK LAQUUER ASH | SEE ELEVATION FOR SIZE | | ACOUSTIC WALL PANEL |
| AWP-2 | MUSIC | KINETICS | HARD SIDE | TBD | | | ACOUSTIC WALL PANEL |
| ACOUSTICAL SOLUTIONS | | | | | | | |
| ACC-1 | ART | ARMSTRONG | TECTUM FINALE | CUSTOM - BLACK | 24X48 | SEE DRAWINGS | ACOUSTICAL SOLUTIONS |
| ACC-2 | MUSIC | ACOUSTICAL SOLUTIONS | PYRAMID SOUND DIFFUSER | WHITE | 48X48 | SEE DRAWINGS | ACOUSTICAL SOLUTIONS |
| BASE | | | | | | | |
| B-1 | GENERAL WALL BASE | ROPPE | VINYL - TYPE TP - 700 SERIES | 100 BLACK | 4" H | | BASE |
| CARPET | | | | | | | |
| CPT-1 | FIELD | TANDUS CENTIVA | APPLAUSE III | QUINCE | 24X24 | UNIDIRECTIONAL | CARPET |
| CORNER GUARD | | | | | | | |
| CG-1 | | INPRO CORP | TAPE ONCORNER GUARDS | SILVER WHITE 0105 | WIDTH- 1.5" HEIGHT- 4'-0" | INSTALL AT TOP OF BASE | CORNER GUARD |
| DOORS | | | | | | | |
| DR-1 | INTERIOR DOORS | VT INDUSTRIES | MATCH EX. | MATCH EX. | | | DOORS |
| FIBRE-REINFORCED PLASTIC | | | | | | | |
| FRP-1 | MOP SINKS IN CUST A22 | MARLITE | STANDARD-PEBBLE SURFACE | P199 BRIGHT WHITE | | | FIBRE-REINFORCED PLASTIC |
| GROUT | | | | | | | |
| G-1 | FOR WALL TILE T-1, T-3 | MAPEI | EPOXY | CHARCOAL 47 | | | GROUT |
| G-2 | FOR FLOOR TILE T-2 | MAPEI | EPOXY | CHARCOAL 47 | | | GROUT |
| LUXURY VINYL TILE | | | | | | | |
| LVT-1 | FIELD | TARKETT | WOOD CONTOUR SERIES | PCNU STERLING | 6" X 48" | | LUXURY VINYL TILE |
| PAINT | | | | | | | |
| P-1 | FIELD PAINT | SHERWIN WILLIAMS | KWALL PAINT, DISTRICT STANDARD | | | | PAINT |
| P-2 | CLASSROOM ACCENT WALLS | SHERWIN WILLIAMS | TBD | | | | PAINT |
| P-3 | INTERIOR DOOR AND WINDOW FRAMES | SHERWIN WILLIAMS | MATCH EX. | | | | PAINT |
| PLASTIC LAMINATE | | | | | | | |
| PL-1 | CASEWORK - HORIZONTAL SURFACES | WILSONART | PLASTIC LAMINATE | BRONZE LEGACY 4656-60 | | | PLASTIC LAMINATE |
| PL-2 | CASEWORK - VERTICAL SURFACES | WILSONART | PLASTIC LAMINATE | BRONZE LEGACY 4656-60 | | | PLASTIC LAMINATE |
| SEALED CONCRETE FLOORING | | | | | | | |
| SC-1 | | - | CONCRETE, SEALED | | - | | SEALED CONCRETE FLOORING |
| SOLID SURFACE | | | | | | | |
| SS-1 | COUNTERTOPS AND WINDOW SILLS | CORIAN | SOLID SURFACING 13MM | DEEP MINK | 13MM | | SOLID SURFACE |
| TACKBOARD | | | | | | | |
| TBD-1 | GENERAL TACKBOARD | FORBO | BULLETIN BOARD | 2182 - POTATO SKIN | 48"X72" | SATIN ANODIZED ALUMINUM TRIM, SEE PLAN FOR SIZE | TACKBOARD |
| TILING | | | | | | | |
| T-1 | RESTROOM WALL TILE | DALTILE | CHORD | ALLEGRO BEIGE CH21-UNPOLISHED | 24X24 | INSTALL IN ALL RESTROOMS | TILING |
| T-2 | RESTROOM FLOOR TILE | AMERICAN OLEAN | NEOCONCRETE | BEIGE NEII-MATTE | 24X24 | INSTALL IN ALL RESTROOMS | TILING |
| T-3 | KITCHEN WALL TILE | DALTILE | COLOR WHEEL LINEAR | K175 GLOSS BISCUIT | 6X18 | INSTALL IN KITCHEN | TILING |
| T-4 | BASE TILE | DALTILE | CHORD | ALLEGRO BEIGE CH21-UNPOLISHED | 6"x24" | INSTALL ON WALLS WITH NO TILE ABOVE | TILING |
| T-5 | MOSAIC AT FLOOR DRAINS | DALTILE | CHORD | ALLEGRO BEIGE CH21-UNPOLISHED | 12"x12" | MOSAIC SHEET AT EX FLOOR DRAINS | TILING |
| TOILET PARTITIONS | | | | | | | |
| TP-1 | TOILET ROOMS | BOBRICK | HDPL | DESERT ZEPHYR 4841-60 | | | TOILET PARTITIONS |
| TRANSITIONS | | | | | | | |
| TR-1 | RESTROOM WALL TILE EDGE TRIM | SCHLUTER | DILEX-AHK | SATIN ANODIZED ALUMINUM | HEIGHT TO MATCH TILE AND SETTING BED THICKNESS | | TRANSITIONS |
| TR-2 | CARPET TO LVT | JOHNSONITE | CTA--XXX-H | BLACK 40 | INSTALLER TO VERIFY SIZE | | TRANSITIONS |
| TR-3 | TILE TO LVT | SCHLUTER | RENO-TK | AE | INSTALLER TO VERIFY SIZE | | TRANSITIONS |
| TR-4 | CARPET TO CARPET | JOHNSONITE | CTA-XX-N | BLACK 40 | INSTALLER TO VERIFY SIZE | | TRANSITIONS |
| WALK OFF CARPET | | | | | | | |
| WOC-1 | | TANDUS CENTIVA | ASSERTIVE ACTION 04837 | CHROMIUM 26201 | 24X24 MODULAR | | WALK OFF CARPET |
| WINDOW SHADE | | | | | | | |
| WS-1 | WINDOW SHADES | HUNTER DOUGLAS | GLACIER SCREEN HD1005 | WHITE/SAND | | | WINDOW SHADE |
| WOOD | | | | | | | |
| WD-1 | | - | FURNITURE GRADE PLYWOOD | MATCH EX. | SEE ELEVATION FOR SIZE | - | WOOD |
| WD-2 | | | FURNITURE GRADE PLYWOOD | MATCH EX. | SEE ELEVATION FOR SIZE | EACH HOUSE (4 TOTAL) TO RECEIVE A DIFFERNT COLOR STAIN. SEE ELEVATION FOR COLOR | WOOD |


TAB Associates
*The Architectural Balance*
0056 Edwards Village Blvd.
Suite 210
Edwards, CO 81632
(970) 766-1470
fax: (970) 766-1471
email: tab@vail.net
www.tabassociates.com

Civil Engineer
Alpine Engineering, Inc.
970-926-3373
Structural Engineer
JH Structural Engineers
303-318-6539
Mechanical Engineer
BG BuildingWorks, Inc.
970-949-6108
Electrical Engineer
BG BuildingWorks, Inc.
970-949-6108


Seal

STATE OF COLORADO
GREGORY A. WACK
30583
LICENSED ARCHITECT

# Strawberry Park Elementary
# 39620 Amethyst Drive
## Steamboat Springs, CO

Revisions:

| No | Description | Date |
|---|---|---|
| | | |

Issue Dates:
Concept - 11/19/2019
SD's - 1/13/20
DD's - 2/20/20
95% - 03/30/20
CDs - 04/06/20

Sheet Title:
**Room Finish Schedule**

Project No:
1935.02

Sheet No:
A0.05

TAB Associates
The Architectural Balance
0056 Edwards Village Blvd.
Suite 210
Edwards, CO 8132
(970) 766-1470
fax: (970) 766-1471
email: tab@vail.net
www.tabassociates.com

Civil Engineer
ALPINE ENGINEERING
(970) 926-3373
Structural Engineer
JIRSA HEDRICK
(303) 839-1963
Mechanical Engineer
BG BUILDINGWORKS
(970) 949-6108
Electrical Engineer
BG BUILDINGWORKS
(970) 949-6108

COLORADO LICENSED
MATTHEW C. WADEY
4-6-20
39865
PROFESSIONAL ENGINEER

# Strawberry Park Elementary
# 39620 Amethyst Drive
## Steamboat Springs, CO 80487

Revisions:

| No | Description | Date |
|---|---|---|
| | | |

Issue Dates:
SD - 1/14/20
DD - 2/20/20
95% CD - 3/30/20
100% CD - 4/6/20

Sheet Title:
**Demolition Plan**

ALPINE ENGINEERING INC.
34510 HWY 6 FLINT AB 1 PO BOX 97
EDWARDS CO 81632 (970)926-3373
WWW.ALPINECIVIL.COM

Project No:
1935.03

Sheet No:
C1.1

O:\Steamboat\School Renovations- 2019\DWG\Master\Strawberry Park ES\Demo-SPES.dwg, 4/3/2020 9:47:09 AM, wadey

City of Steamboat Springs Standard Construction Plan Notes

General Notes

1. Benchmark = (insert City benchmark used, can be obtained from City Utilities. Note the City's vertical datum is NAVD 88 and horizontal datum is NAD 1983)
2. Topographic and existing conditions mapped by Landmark Consultants, Inc. on December 6, 2019,
3. City of Steamboat Springs plan review and approval is only for general conformance with City design criteria and the City code. The City is not responsible for the completeness, accuracy and adequacy of the drawings. Design, dimensions, and elevations shall be confirmed and correlated at the job site.
4. One copy of the approved construction plans and specifications shall be kept on the job site at all times. Prior to the start of construction, contractor to verify with project engineer the latest revision date of the approved construction plans.
5. Contractor shall verify the location of all utilities. Call the Utility Notification Center of Colorado (UNCC) at 1-800-922-1987 and any necessary private utility to perform locates prior to conducting any site work.
6. All infrastructure construction and related work shall conform to the City of Steamboat Springs standard specifications, latest revision.
7. All water and sanitary sewer construction and related work shall conform to the City of Steamboat Springs Standard Specifications for Water and Wastewater utilities, current edition.
8. Contractor shall obtain all necessary permits and approvals required to perform the work such as Right-of-Way permit, grading and excavation permit, construction dewatering permit, storm water quality permit, Army Corp of Engineer permit, etc. It is the contractor's responsibility to obtain a copy of all applicable codes, licenses, specifications, and standards necessary to perform the work, and be familiar with their contents prior to commencing any work.
9. Prior to start of construction Contractor shall coordinate with Project Engineer to identify project inspection and testing requirements. Contractor shall provide for inspections and testing at an adequate frequency for the Project Engineer to document that project is constructed in conformance with the approved plans and specifications.
10. Contractor is responsible for all necessary traffic control. Traffic control shall be in accordance with the Manual on Uniform Traffic Control Devices (MUTCD), latest edition.
11. Contractor shall provide all necessary traffic control (signs, barricades, flagmen, lights, etc) in accordance with the MUTCD, current edition.
12. Contractor must submit a Construction Site Management Plan (CSMP) for review and approval by the City Construction Services Foreman prior to start of construction. The CSM must be maintained on-site and updated as needed to reflect current conditions.

Grading

1. Grading shall occur within the property limits. Where off-site work is approved, written permission of the adjacent property owner must be obtained prior to any off-site grading or construction.
2. No work shall occur in wetlands or floodplains without appropriate permits. Any work shall be in accordance with the issued permits.
3. Vegetated slopes greater than 2:1 require soil stabilization .

Erosion Control

Refer to sheet C4.1

Paving

1. Paving of public streets shall not start until sub grade compaction and material tests are taken and accepted by the Public Works Director.
2. Existing asphalt pavement shall be straight saw cut when adjoining with new asphalt pavement or when access to underground utilities is required. Tack coat shall be applied to all exposed surfaces including saw cuts, potholes, trenches, and asphalt overlay. Asphalt patches in the Right-of-Way shall be per City specifications.
3. Adjust rims of cleanouts, manholes, valve covers to final grade.
4. Contractor to contact City Streets Superintendent at (970)879-1807 to schedule installation of public street signs. All other traffic control signs are the responsibility of the contractor.

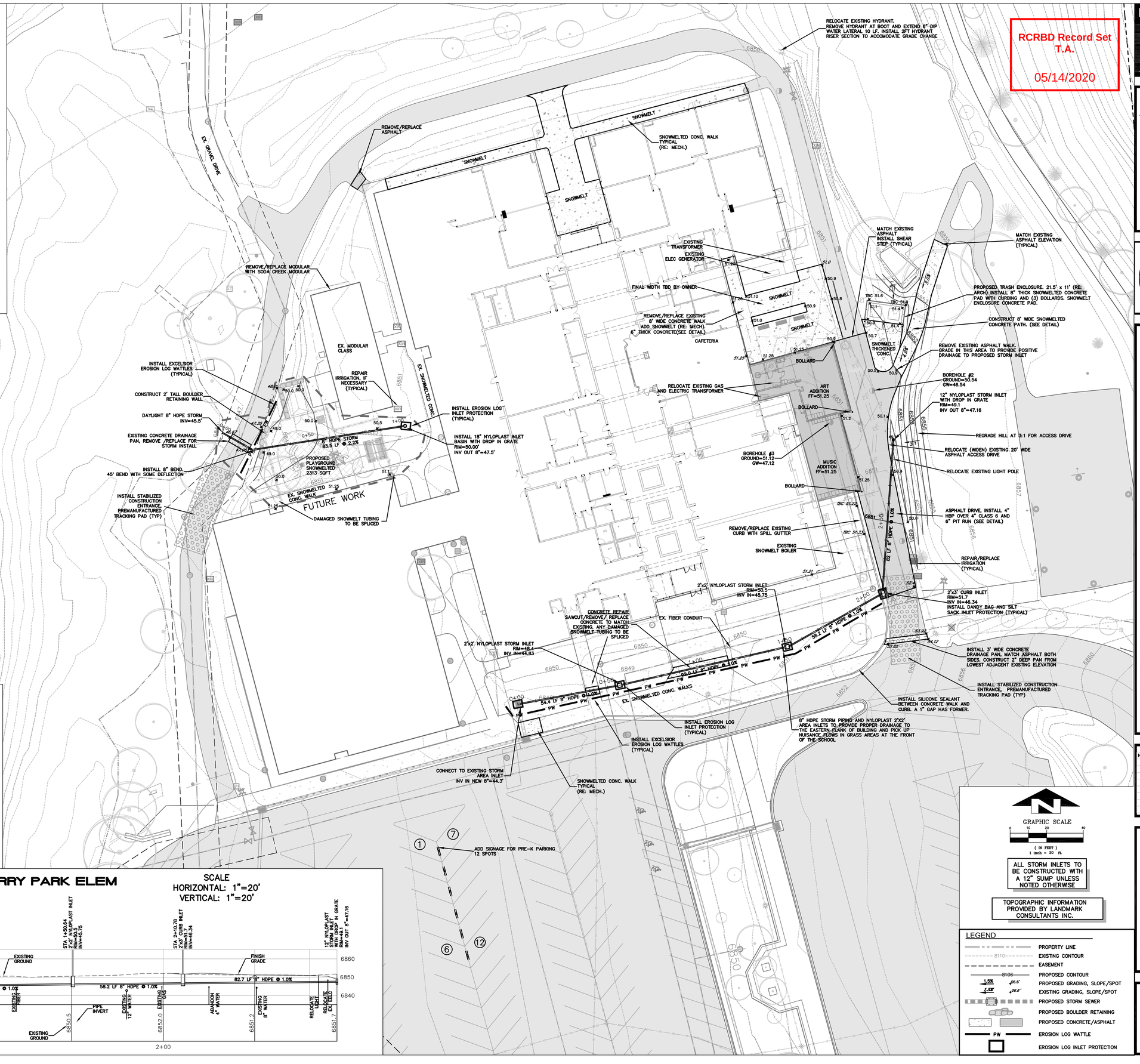


RCRBD Record Set
T.A.
05/14/2020


TAB Associates
The Architectural Balance
0056 Edwards Village Blvd.
Suite 210
Edwards, CO 8132
(970) 766-1470
fax: (970) 766-1471
email: tab@vail.net
www.tabassociates.com

Civil Engineer
ALPINE ENGINEERING
(970) 926-3373

Structural Engineer
JIRSA HEDRICK
(303) 839-1963

Mechanical Engineer
BG BUILDINGWORKS
(970) 949-6108

Electrical Engineer
BG BUILDINGWORKS
(970) 949-6108


COLORADO LICENSED
MATTHEW C. HEDRICK
4-6-20
39865
PROFESSIONAL ENGINEER

# Strawberry Park Elementary
## 39620 Amethyst Drive
Steamboat Springs, CO 80487

Revisions:

| No | Description | Date |
|---|---|---|
| | | |

Issue Dates:
SD - 1/14/20
DD - 2/20/20
95% CD - 3/30/20
100% CD - 4/6/20

Sheet Title:
**Grading & Drainage**

ALPINE ENGINEERING INC.
0056 EDWARDS VILLAGE BLVD. SUITE 210
EDWARDS, CO 81632 | 970.926.3373
WWW.ALPINECIVIL.COM

Project No:
1935.03

Sheet No:
C2.0

O:\Steamboat\School Renovations- 2019\DWG\Master\Strawberry Park ES\Grading-SPES.dwg, 4/3/2020 9:55:30 AM, wadey

## PROFILE: WATER-EAST

SCALE
HORIZONTAL: 1"=20'
VERTICAL: 1"=20'

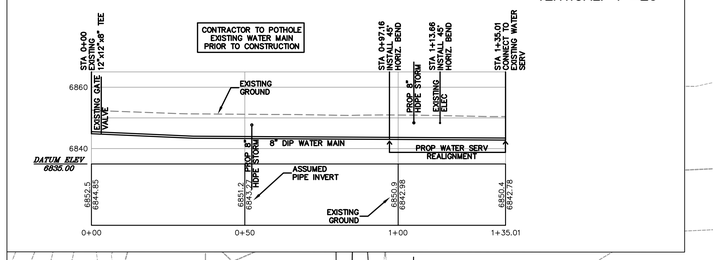


## PROFILE: SEWER-SPE

SCALE
HORIZONTAL: 1"=20'
VERTICAL: 1"=20'

ACHEN Record Set
T.A.
05/14/2020

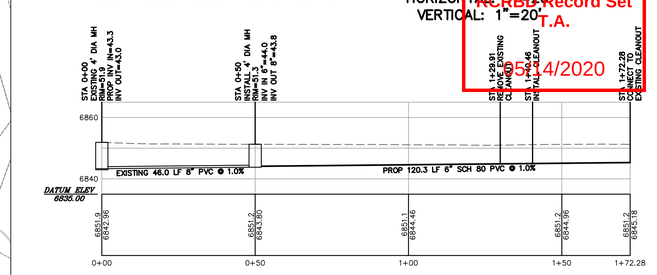

UTILITY PROVIDERS
WATER: CITY OF STEAMBOAT
SEWER: CITY OF STEAMBOAT
ELECTRIC: YAMPA VALLEY ELEC.
GAS: ATMOS ENERGY
INTERNET/PHONE: CENTURY LINK /MAMMOTH NETWORKS

GRAPHIC SCALE
0 10 20 40
( IN FEET )
1 inch = 20 ft.

TOPOGRAPHIC INFORMATION PROVIDED BY LANDMARK CONSULTANTS INC.

## LEGEND

| | |
|---|---|
| XE | EXISTING ELECTRIC |
| XTV | EXISTING COMM. SERVICE |
| XG | EXISITNG GAS |
| | EXISTING WATER |
| XS | EXISTING SEWER |
| | FIRE HYDRANT W/GV |
| | STORM SEWER |


TAB Associates
*The Architectural Balance*
0056 Edwards Village Blvd.
Suite 210
Edwards, CO 8132
(970) 766-1470
fax: (970) 766-1471
email: tab@vail.net
www.tabassociates.com

Civil Engineer
ALPINE ENGINEERING
(970) 926-3373

Structural Engineer
JIRSA HEDRICK
(303) 839-1963

Mechanical Engineer
BG BUILDINGWORKS
(970) 949-6108

Electrical Engineer
BG BUILDINGWORKS
(970) 949-6108


COLORADO LICENSED
MATTHEW C. HEDRICK
4-6-20
39865
PROFESSIONAL ENGINEER

# Strawberry Park Elementary
## 39620 Amethyst Drive
### Steamboat Springs, CO 80487

Revisions:

| No | Description | Date |
|---|---|---|
| | | |

Issue Dates:
SD - 1/14/20
DD - 2/20/20
95% CD - 3/30/20
100% CD - 4/6/20

Sheet Title:
**Utility Plan**


ALPINE ENGINEERING INC.
34510 HWY 6 / UNIT A9 / PO BOX 97
EDWARDS, CO 81632 / (970) 926-3373
WWW.ALPINECIVIL.COM


Project No:
1935.03

Sheet No:
C3.0


O:\Steamboat\School Renovations- 2019\DWG\Master\Strawberry Park ES\Utility-SPES.dwg 4/3/2020 9:51:19 AM wadley

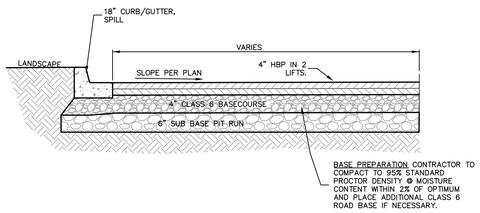


ASPHALT DRIVE/PARKING SECTION

NTS

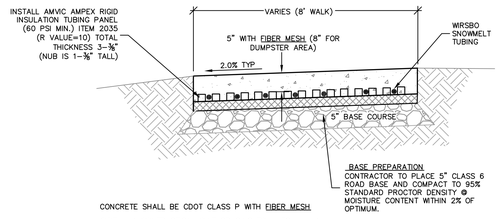


CONCRETE SHALL BE CDOT CLASS P WITH FIBER MESH

SIDEWALK CONTRACTION JOINT SPACING TO MATCH WALK WIDTH OR 6' MAX. WHICHEVER IS THE SMALLER DIMENSION.

SNOWMELTED CONCRETE SECTION

NTS

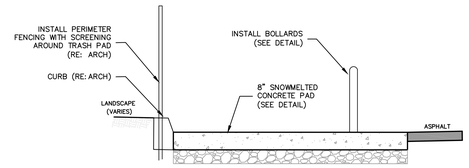


CONCRETE SHALL BE CDOT CLASS P.

CONTRACTION JOINT SPACING TO BE 10' O.C. MAX. SAWED IN UNIFORM SQUARE PATTERN

CONTRACTOR TO PROTECT CONCRETE FROM TRAFFIC UNTIL COMPRESSIVE STRENGTH REACHES 4500 PSI

CONCRETE DUMPSTER PAD

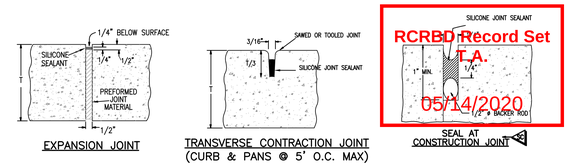


EXPANSION JOINT

TRANSVERSE CONTRACTION JOINT (CURB & PANS @ 5' O.C. MAX)

RCRBD Record Set
T.A.
05/14/2020

CONCRETE JOINTING

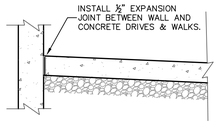


EXPANSION JOINT AT BUILDING

N.T.S.

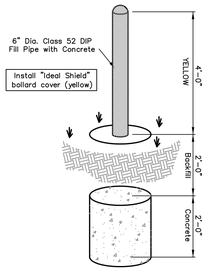


BOLLARD

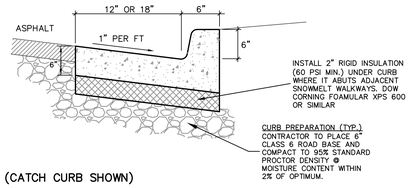


(CATCH CURB SHOWN)

ALL CONCRETE TO BE CDOT CLASS P OR B
CONSTRUCT CURB AND GUTTER PER COLORADO D.O.T. STANDARD M-609-1

PROVIDE CONTRACTION JOINTS 5' O.C. MAXIMUM

6" VERTICAL CURB AND GUTTER

NTS

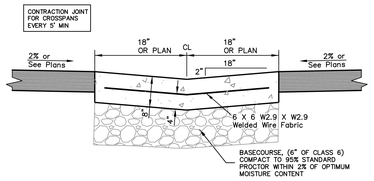


USE CDOT CLASS P CONCRETE FOR CURB AND GUTTERS

CONCRETE CROSSPAN

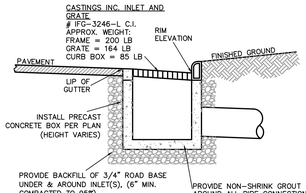


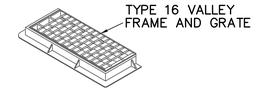

TYPE 16 VALLEY FRAME AND GRATE

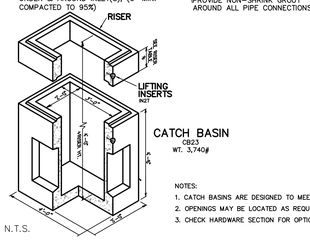


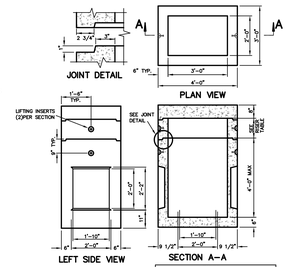


NOTES:
1. CATCH BASINS ARE DESIGNED TO MEET ASTM C858 WITH AASHTO HS-20 LOADING.
2. OPENINGS MAY BE LOCATED AS REQUIRED.
3. CHECK HARDWARE SECTION FOR OPTIONAL ACCESSORIES.

| RISER | | |
|---|---|---|
| HEIGHT | CODE | WEIGHT |
| 1' | CB231R | 930# |
| 2' | CB232R | 1,860# |
| 3' | CB233R | 2,790# |

2'x3' CURB INLET

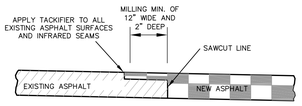


SAWCUT SHEAR STEP JOINT

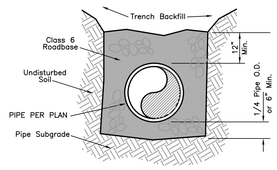


STORM SEWER BEDDING

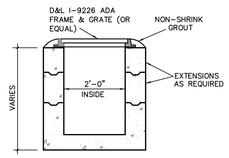

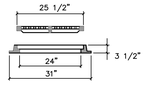


2'x2' AREA INLET

NTS

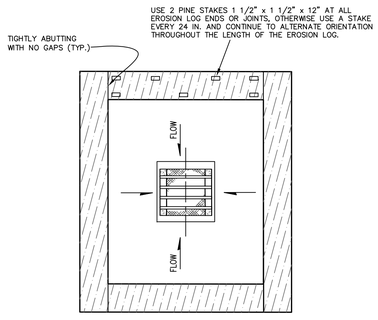


EROSION LOG INLET PROTECTION

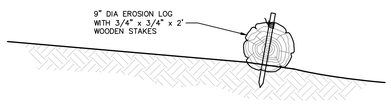


- THE HEIGHT OF A STRAW WATTLE IS 9 IN.
- THE INSTALLED HEIGHT IS APPROXIMATELY 7–9 IN.
- STAKE WATTLES AT 6' O.C.

EROSION LOG WATTLE DETAIL

N.T.S.

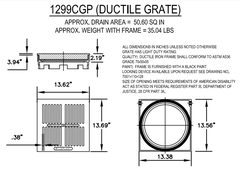


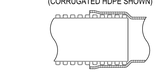


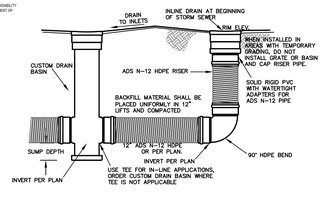


NYLOPLAST DRAIN BASINS

N.T.S.

CONTRACTOR MAY BE REQUIRED TO INSTALL SHALLOW UTILITIES BELOW STORM SEWER OR OTHER UTILITIES TO MAINTAIN MINIMUM COVER AND AVOID CONFLICTS

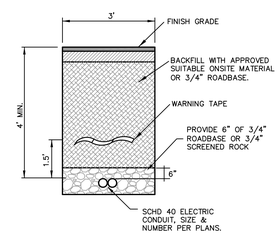


ELECTRIC TRENCH

N.T.S.

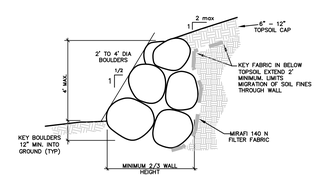


BOULDER WALL

Oldcastle Infrastructure
A CRH COMPANY

DURALITE™

1118

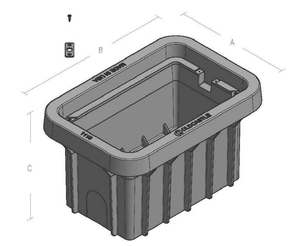


MATERIAL & STYLE

Polyolefin Blend
Straight Wall

1118-12

ANSI/SCTE-77, Tier 15
12.6 lbs

ANSI/SCTE-77, Tier 22
12.6 lbs

1118-18

ANSI/SCTE-77, Tier 15
16.3 lbs

ANSI/SCTE-77, Tier 22
16.3 lbs

| | A | B | C |
|---|---|---|---|
| 1118-12 | 14 1/4 | 21 1/8 | 12 |
| 1118-18 | 14 1/4 | 21 1/8 | 18 |

MEDIUM DUTY ANSI/SCTE TIER 15
HEAVY DUTY ANSI/SCTE TIER 22

For use in non-vehicular traffic situations only. Weights and dimensions may vary slightly. Actual load rating is determined by the box and cover combination.

Cover comes standard with greenskeeper markings for manufacturer, load rating, model size and manufacturing location. *Based upon lid and body combination, this unit can be Tier 15 or Tier 22. T22 rating when paired with T22 polymer concrete lid.

Revision 10/30/19

© 2019 Oldcastle Infrastructure, Inc

oldcastleinfrastructure.com
(888) 965-3227

Solving today. Transforming tomorrow.™

PULL BOX (ELECTRIC HANDHOLE)

TAB Associates
The Architectural Balance
0056 Edwards Village Blvd.
Suite 210
Edwards, CO 81632
(970) 766-1470
fax: (970) 766-1471
email: tab@vail.net
www.tabassociates.com

Civil Engineer:
ALPINE ENGINEERING
(970) 926-3373

Structural Engineer:
JIRSA HEDRICK
(303) 839-1963

Mechanical Engineer:
BG BUILDINGWORKS
(970) 949-6108

Electrical Engineer:
BG BUILDINGWORKS
(970) 949-6108

COLORADO LICENSED
MATTHEW C. WADLEY
7-6-20
39865
PROFESSIONAL ENGINEER

# Strawberry Park Elementary
## 39620 Amethyst Drive
Steamboat Springs, CO 80487

| Revisions: | | |
|---|---|---|
| No | Description | Date |

Issue Dates:
SD - 1/14/20
DD - 2/20/20
95% CD - 3/30/20
100% CD - 4/6/20

Sheet Title:
**Grading & Drainage Details**

ALPINE ENGINEERING INC.
34510 HWY 6 UNIT A9 / PO BOX 97
EDWARDS CO 81632 / (970)926.3373
WWW.ALPINECIVIL.COM

Project No:
1935.03

Sheet No:
C4.0

O:\Steamboat\School Renovations- 2019\DWG\Master\Strawberry Park ES\Details-SPES.dwg, 4/3/2020 9:44:27 AM, wadley

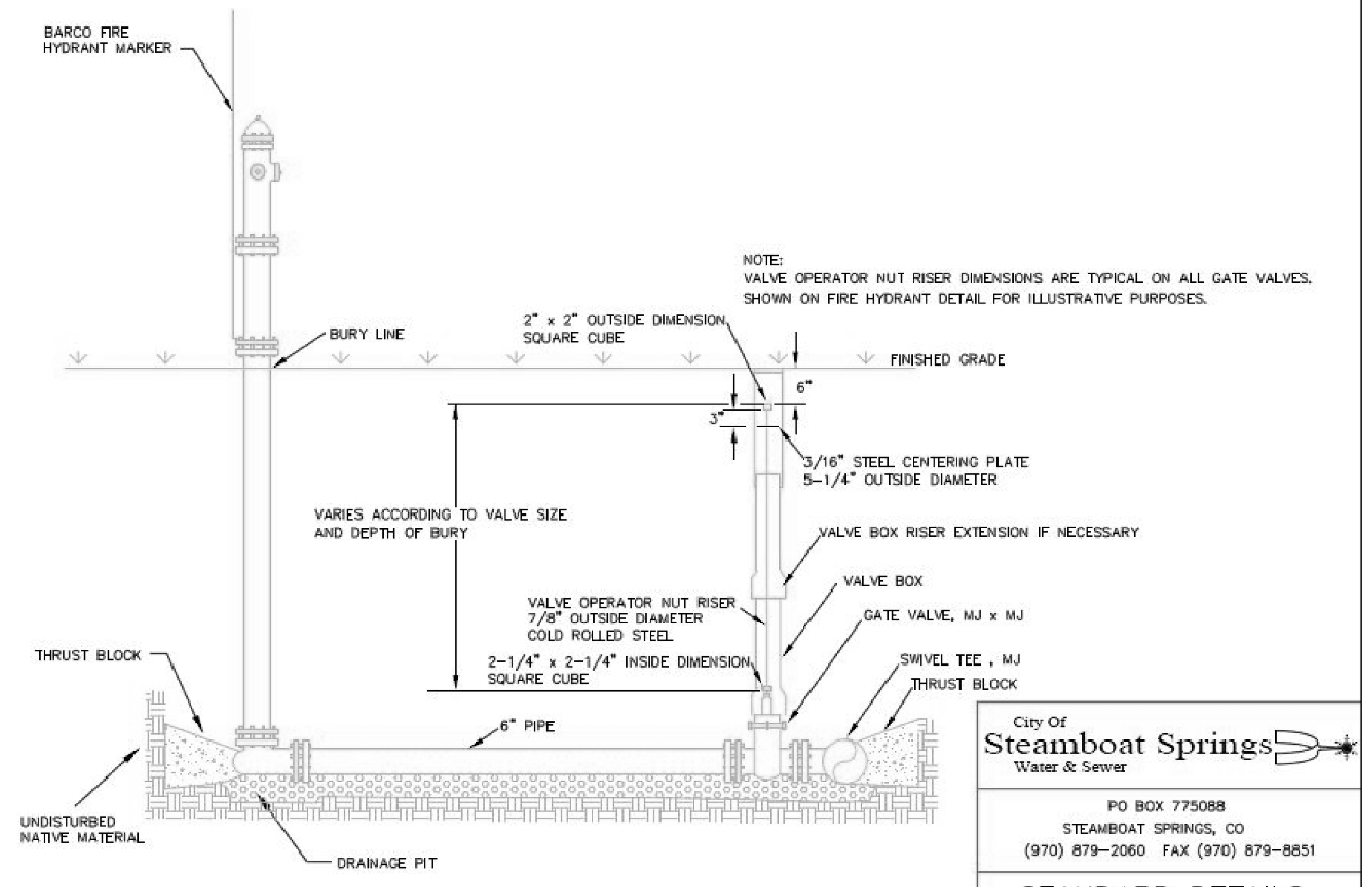


FIRE HYDRANT DETAIL
NTS

City Of
Steamboat Springs
Water & Sewer
PO BOX 775088
STEAMBOAT SPRINGS, CO
(970) 879-2060 FAX (970) 879-8851
STANDARD DETAILS
Drawn by: GLB
Scale: N.T.S. Date: 2/24/00
Revision description:
Sheet number 7 of 17

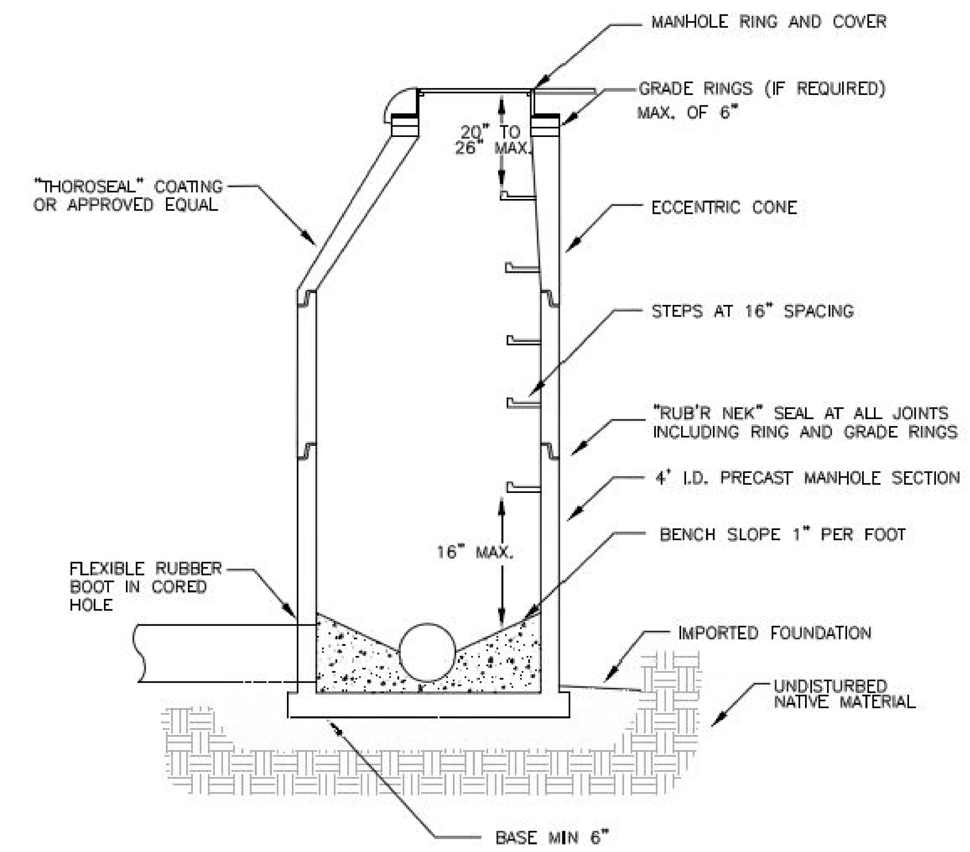


STANDARD MANHOLE CROSS SECTION
NTS

City Of
Steamboat Springs
Water & Sewer
PO BOX 775088
STEAMBOAT SPRINGS, CO
(970) 879-2060 FAX (970) 879-8851
STANDARD DETAILS
Drawn by: GLB
Scale: N.T.S. Date: 2/7/02
Revision description:
Sheet number 9 of 17

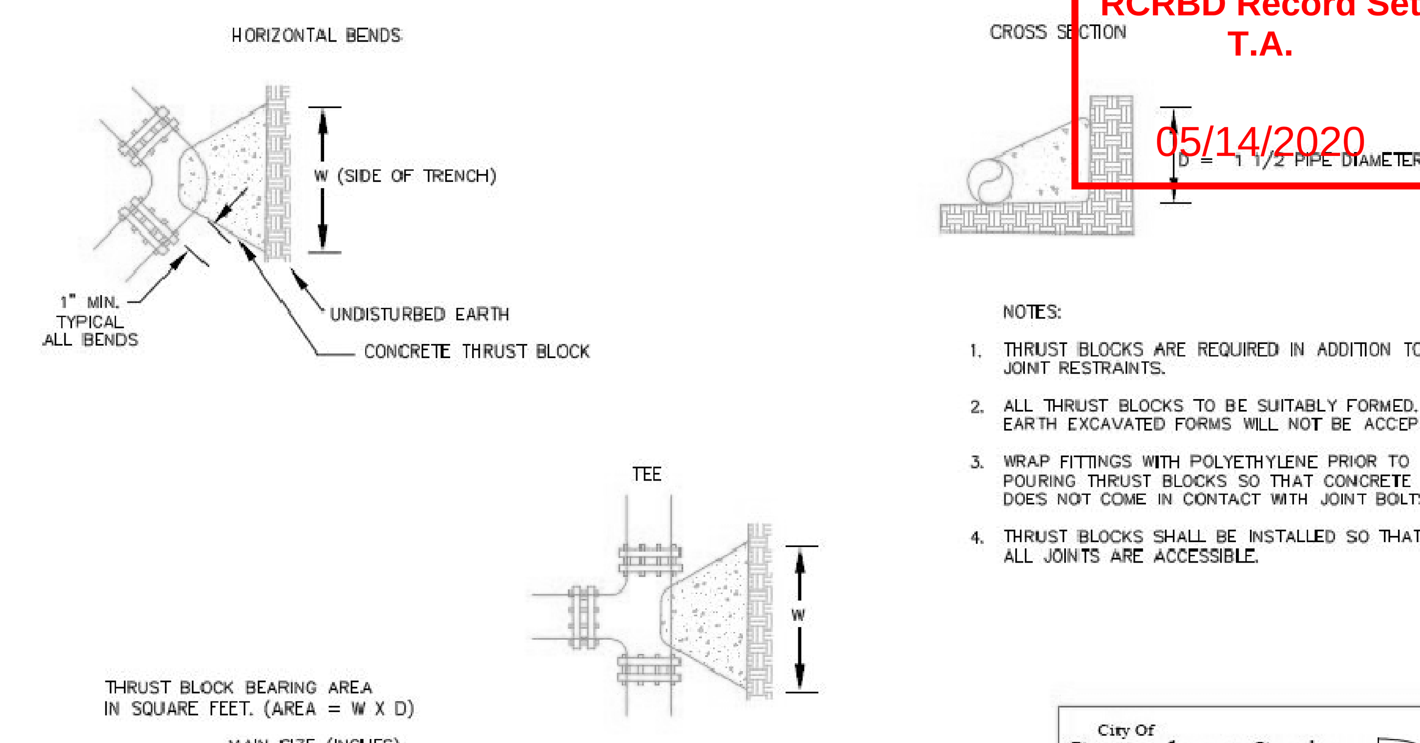


NOTES:

1. THRUST BLOCKS ARE REQUIRED IN ADDITION TO JOINT RESTRAINTS.
2. ALL THRUST BLOCKS TO BE SUITABLY FORMED. EARTH EXCAVATED FORMS WILL NOT BE ACCEPTED.
3. WRAP FITTINGS WITH POLYETHYLENE PRIOR TO POURING THRUST BLOCKS SO THAT CONCRETE DOES NOT COME IN CONTACT WITH JOINT BOLTS.
4. THRUST BLOCKS SHALL BE INSTALLED SO THAT ALL JOINTS ARE ACCESSIBLE.

THRUST BLOCK BEARING AREA
IN SQUARE FEET. (AREA = W X D)

| | MAIN SIZE (INCHES) | | | |
|---|---|---|---|---|
| FITTING TYPE | <6" | 8" | 10" | 12" |
| 45° OR LESS BEND | 3 | 3 | 3 | 5 |
| 90° BEND | 3 | 4 | 6 | 9 |
| TEE OR PLUG | 3 | 3 | 4 | 6 |

THRUST BLOCK DETAIL
NTS

City Of
Steamboat Springs
Water & Sewer
PO BOX 775088
STEAMBOAT SPRINGS, CO
(970) 879-2060 FAX (970) 879-8851
STANDARD DETAILS
Drawn by: GLB
Scale: N.T.S. Date: 2/15/06
Revision description:
Sheet number 6 of 17

RCRBD Record Set
T.A.
05/14/2020

REFER TO CITY OF STEAMBOAT'S STANDARD SPECIFICTIONS FOR WATER AND WASTEWATER UTILITIES

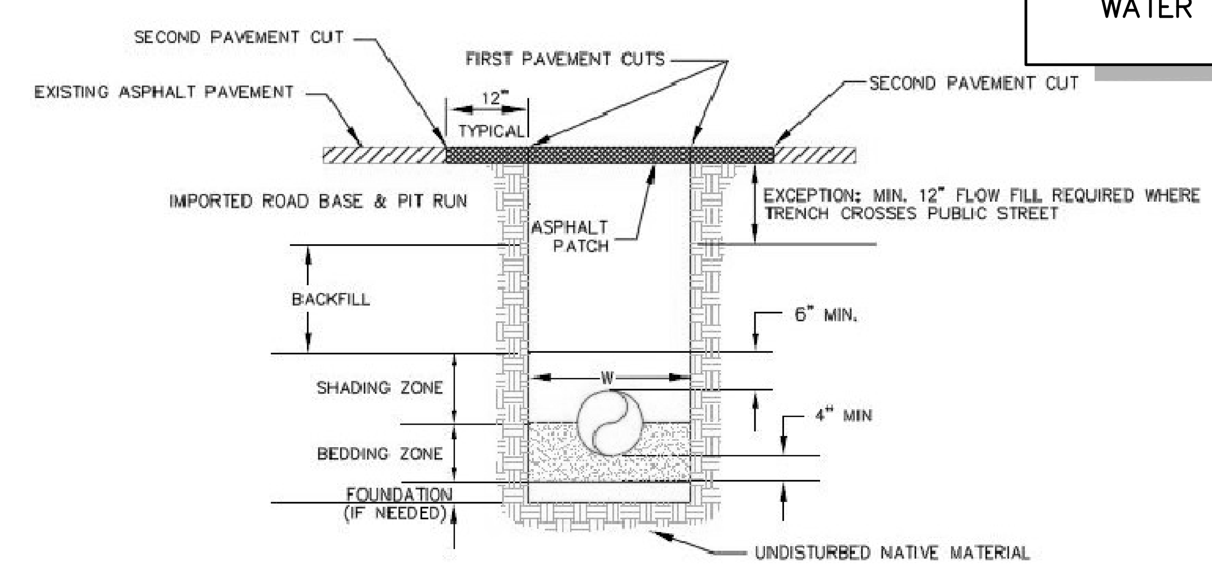


NOTES:

A GUIDE FOR DESIRABLE TRENCH WIDTH (W) AT THE TOP OF THE PIPE SHALL BE THE NOMINAL DIAMETER OF THE PIPE PLUS 12-INCHES ON EACH SIDE OF THE PIPE.

A SECOND PAVEMENT CUT SHALL BE REQUIRED PRIOR TO PLACING THE ASPHALT PATCH. REMOVE ALL IRREGULAR ASPHALT EDGES A MINIMUM OF 12-INCHES BEYOND ANY DAMAGED SURFACE TO A CLEAN VERTICAL EDGE. APPLY A BITUMINOUS TACK COAT PRIOR TO PLACING THE ASPHALT PATCH.

THE ASPHALT PATCH SHALL BE PLACED IN TWO 2-INCH LIFTS AND ROLLER COMPACTED TO MATCH THE ADJACENT ASPHALT EDGES.

SUB-BASE MATERIALS SHALL CONSIST OF 4-INCHES OF ROAD BASE ON 8-INCHES OF PIT-RUN. COMPACTION REQUIREMENTS SHALL EXCEED 95% MAXIMUM DRY DENSITY AS DETERMINED BY THE AASHTO T-180 TEST PROCEDURES.

TRENCH CROSS SECTION
NTS

City Of
Steamboat Springs
Water & Sewer
PO BOX 775088
STEAMBOAT SPRINGS, CO
(970) 879-2060 FAX (970) 879-8851
STANDARD DETAILS
Drawn by: JS
Scale: N.T.S. Date: 3/01/10
Revision description:
Sheet number 1 of 17

SEWER SERVICE LATERAL CONNECTION NOTES:

1. INSPECTION: PRIOR TO BACKFILL, SECURE A PASSING INSPECTION BY THE CITY UTILITY DEPARTMENT FOR ALL PIPE, FITTINGS, COUPLINGS, AND GRADE.
2. BACKFILL: INSTALL AND COMPACT ALL BACKFILL MATERIAL PER CITY OF STEAMBOAT SPRINGS STANDARD SPECIFICATIONS SECTION 24 AND AS SHOWN WITHIN THE TRENCH CROSS SECTION DETAIL.
3. RUBBER GASKETED BELL AND SPIGOT TYPE COUPLER FOR TRANSITION FROM SCHEDULE 40 PVC TO SDR35.
4. ALL PVC FITTINGS SHALL MEET ASTM D3034 SPECIFIATIONS, AND SHALL ALSO MEET ASTM D3212 SPECIFICATIONS FOR RUBBER GASKETED BELL AND SPIGOT TYPE WITH INTEGRAL BELL.

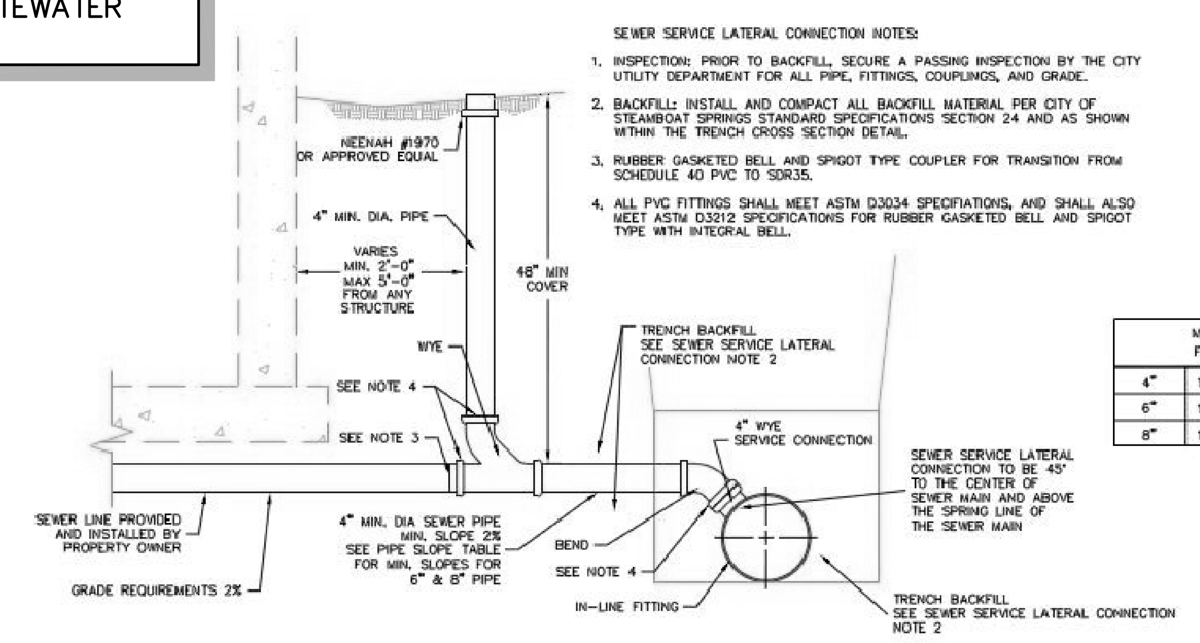


| MINIMUM PIPE SLOPES FOR SEWER SERVICES | | |
|---|---|---|
| 4" | 1/4" PER FOOT | 2% |
| 6" | 1/8" PER FOOT | 1% |
| 8" | 1/16" PER FOOT | 0.5% |

SECTION

SEWER SERVICE LATERAL CONNECTION DETAIL
NTS

City Of
Steamboat Springs
Water & Sewer
PO BOX 775088
STEAMBOAT SPRINGS, CO
(970) 879-2060 FAX (970) 879-8851
STANDARD DETAILS
Drawn by: GLB
Scale: N.T.S. Date: 1/30/01
Revision description:
Sheet number 3 of 17

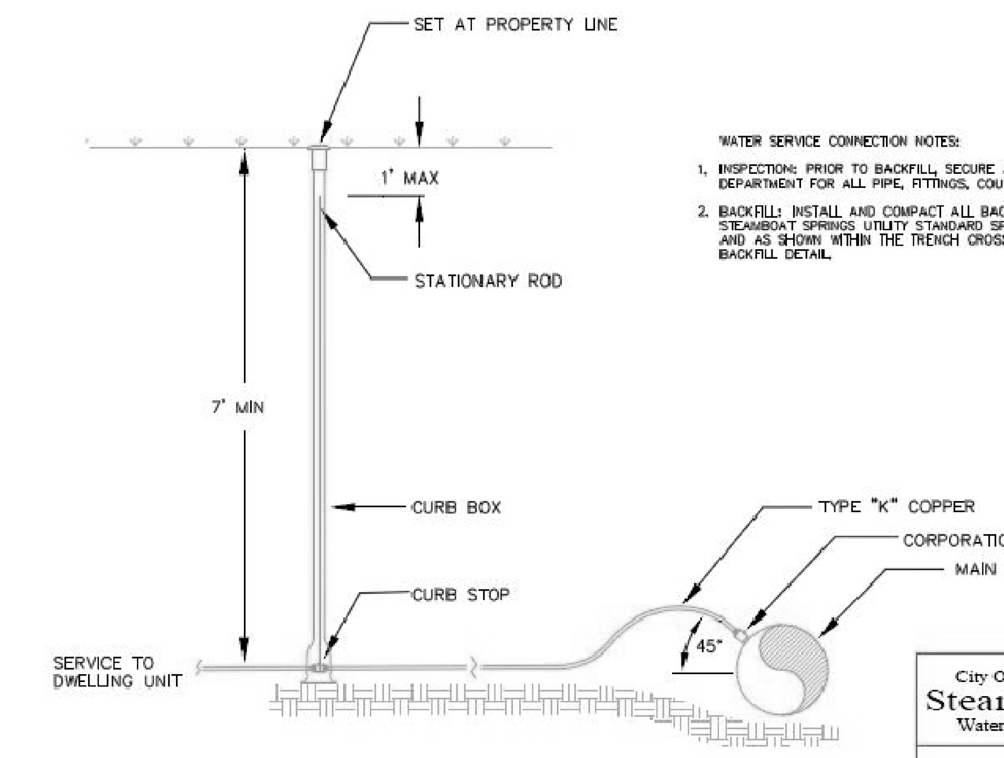


WATER SERVICE CONNECTION NOTES:

1. INSPECTION: PRIOR TO BACKFILL, SECURE ACCEPTANCE BY THE CITY UTILITY DEPARTMENT FOR ALL PIPE, FITTINGS, COUPLINGS, AND GRADE.
2. BACKFILL: INSTALL AND COMPACT ALL BACKFILL MATERIAL PER CITY OF STEAMBOAT SPRINGS UTILITY STANDARD SPECIFICATIONS SECTION 24 AND AS SHOWN WITHIN THE TRENCH CROSS SECTION AND PIPE EMBEDMENT BACKFILL DETAIL.

WATER SERVICE LINE DETAIL
NTS

City Of
Steamboat Springs
Water & Sewer
PO BOX 775088
STEAMBOAT SPRINGS, CO
(970) 879-2060 FAX (970) 879-8851
STANDARD DETAILS
Drawn by: GLB
Scale: N.T.S. Date: 2/24/00
Revision description:
Sheet number 2 of 17

NOTE:
CROSSING CONDITIONS APPLY TO ALL MAIN AND SERVICE LINES

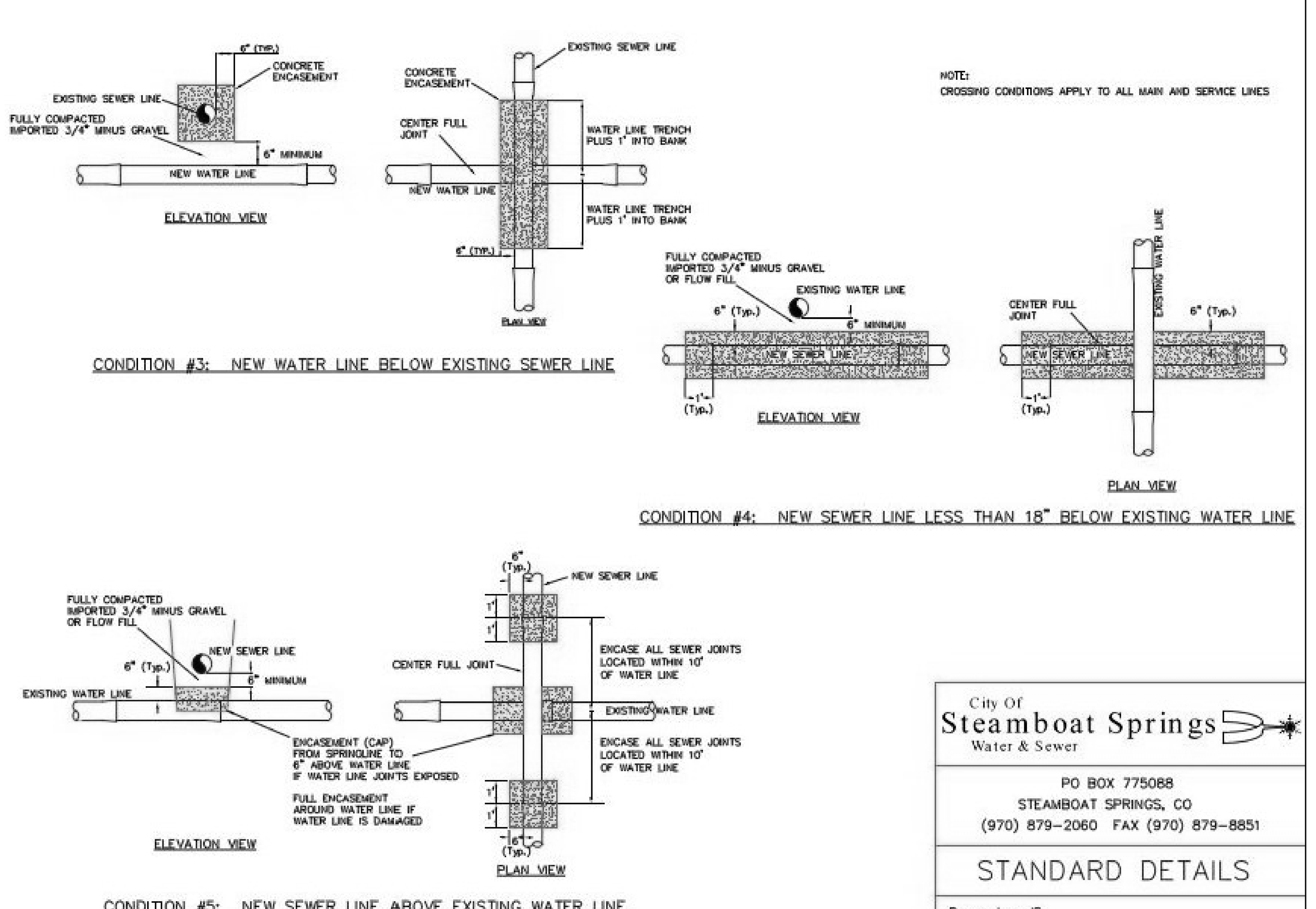


WATER AND SEWER CROSSING CONDITIONS (SHEET 2 OF 2)
NTS

City Of
Steamboat Springs
Water & Sewer
PO BOX 775088
STEAMBOAT SPRINGS, CO
(970) 879-2060 FAX (970) 879-8851
STANDARD DETAILS
Drawn by: JS
Scale: N.T.S. Date: 3/16/10
Revision description:
Sheet number 13 of 17

## EROSION/SEDIMENT CONTROL

GENERAL NOTES FOR SEDIMENT CONTROL

1. CONTRACTOR SHALL SUBMIT A CONSTRUCTION STAGING & MANAGEMENT PLAN IDENTIFYING CONSTRUCTION FENCING, STAGING, STORAGE & CONSTRUCTION TRAILER LOCATION PRIOR TO COMMENCEMENT OF CONSTRUCTION ACTIVITIES.
2. INSTALL AND MAINTAIN SEDIMENT CONTROL MEASURES IN ACCORDANCE WITH THESE PLANS AND AS NEEDED TO PREVENT SEDIMENT FROM DISCHARGING OFF-SITE.
3. ALL PROPOSED SEDIMENT CONTROL MEASURES ARE TEMPORARY MEASURES UNLESS SPECIFIED OTHERWISE ON PLANS.
4. SEDIMENT CONTROL MEASURES MAY REQUIRE FIELD ADJUSTMENTS AT THE TIME OF CONSTRUCTION TO INSURE THAT THEIR INTENDED PURPOSE IS ACCOMPLISHED.
5. PROVIDE REGULAR INSPECTION AND MAINTENANCE OF ALL SEDIMENT CONTROL MEASURES TO INSURE THAT SEDIMENT CONTROL EFFICIENCY IS OBTAINED UNTIL FINAL STABILIZATION OF SITE HAS TAKEN PLACE.
6. INSTALL SEDIMENT CONTROL MEASURES AT THE ONSET OF GRADING OPERATIONS SO THAT EFFECTIVE SEDIMENT CONTROL CAN BE ACHIEVED DURING THE ENTIRE CONSTRUCTION PERIOD.
7. STABILIZE ALL POINTS OF INGRESS AND EGRESS WITH TRACKING PAD DURING CONSTRUCTION TO PREVENT TRACKING OF MUD ONTO PUBLIC WAYS.
8. FOR TEMPORARY STOCKPILES APPLY SEED, HYDROMULCH AND TACKIFIER IMMEDIATELY AFTER THEY ARE CONSTRUCTED FOR STABILIZATION. IF EROSION OCCURS AFTER APPLICATION OF THE TACKIFIER, USE EXCELSIOR C2 EROSION CONTROL FABRIC. INSTALL SILT FENCE BELOW STOCKPILES TO CAPTURE SEDIMENT.
9. THE TERM 'REVEGETATION' ON THIS PLAN MEANS THE SUCCESSFUL GERMINATION AND ESTABLISHMENT OF STABLE GRASS COVER FROM A PROPERLY PREPARED SEEDBED CONTAINING THE SPECIFIED AMOUNTS OF FERTILIZER IN ACCORDANCE WITH APPLICABLE 'STANDARDS AND SPECIFICATIONS'. REFER TO LANDSCAPE PLANS FOR SEED MIX, FERTILIZER TYPE, MULCH, TACKIFIER AND APPLICATION RATES.
10. IT IS THE CONTRACTOR'S RESPONSIBILITY TO TAKE APPROPRIATE MEASURES TO INSURE THAT NO SEDIMENT LADEN WATER IS DISCHARGED FROM THE SITE.
11. APPROVAL SHALL BE REQUESTED UPON FINAL STABILIZATION OF ALL SITES BEFORE REMOVAL OF SEDIMENT CONTROLS.
12. CONTRACTOR SHALL OBTAIN AND CONFORM TO STORMWATER DISCHARGE PERMIT AND AND ALL ENVIRONMENTAL PERMITS AND KEEP STREETS CLEAN AND FREE OF SEDIMENT.
13. REMOVAL AND CLEANUP OF ANY SEDIMENT THAT LEAVES THE SITE IS THE RESPONSIBILITY OF THE CONTRACTOR

FUGITIVE DUST CONTROL

THE CONTRACTOR IS RESPONSIBLE TO CONTROL FUGITIVE DUST AND TO INCORPORATE THE FOLLOWING:

1. ALL UNPAVED ROADS AND OTHER DISTURBED AREAS ON SITE SHALL BE WATERED TO MINIMIZE FUGITIVE DUST.
2. HAUL ROADS SHALL BE TREATED WITH MAGNESIUM CHLORIDE IF WATER IS NOT CONTROLLING THE DUST.
3. ALL DISTURBED SURFACE AREAS SHALL BE REVEGETATED OR SURFACED PER THE LANDSCAPE PLAN AS SOON AS POSSIBLE.
4. MUD AND DIRT CARRYOUT ONTO PAVED SURFACES SHALL BE PREVENTED. ANY MUD AND DIRT CARRYOUT ONTO PAVED SURFACES SHALL BE CLEANED UP DAILY.

CONSTRUCTION SEQUENCE OF EROSION/SEDIMENT CONTROL MEASURES

BEFORE COMMENCING GRADING OR CONSTRUCTION

1. CONSTRUCT STABLIZED CONSTRUCTION ENTRANCES AT ALL POINTS OF INGRESS AND EGRESS.
2. CONTRACTOR SHALL TAKE APPROPRIATE MEASURES TO ASSURE THAT NO SEDIMENT LEAVES THE SITE.
3. CONSTRUCT SILT FENCE AND WATTLES AND ALL SEDIMENT CONTROL DEVICES.
4. BEGIN DEMOLITION, EXCAVATION AND CONSTRUCTION.
5. INSTALL EROSION CONTROL MEASURES AFTER DITCHES AND SWALES HAVE BEEN CONSTRUCTED AND TOPSOIL AND SEED HAVE BEEN PLACED. INSTALL INLET PROTECTION IN ALL INLETS AS THEY ARE CONSTRUCTED.
6. TOPSOIL AND REVEGETATE ALL DISTURBED AREAS WITH APPROVED SEED MIX PER LANDSCAPE PLAN.
7. CONTRACTOR SHALL REMOVE SEDIMENT CONTROL FACILITIES AFTER FINAL STABILIZATION.

TAB Associates
The Architectural Balance
0056 Edwards Village Blvd. Suite 210
Edwards, CO 8132
(970) 766-1470
fax: (970) 766-1471
email: tab@vail.net
www.tabassociates.com

Civil Engineer
ALPINE ENGINEERING
(970) 926-3373
Structural Engineer
JIRSA HEDRICK
(303) 839-1963
Mechanical Engineer
BG BUILDINGWORKS
(970) 949-6108
Electrical Engineer
BG BUILDINGWORKS
(970) 949-6108

COLORADO LICENSED MATTHEW C. WADEY 39865 4-6-20 PROFESSIONAL ENGINEER

**Strawberry Park Elementary**
**39620 Amethyst Drive**
**Steamboat Springs, CO 80487**

| Revisions: | | |
|---|---|---|
| No | Description | Date |
| | | |

Issue Dates:
SD - 1/14/20
DD - 2/20/20
95% CD - 3/30/20
100% CD - 4/6/20

Sheet Title:
**Water & Sewer Details**

ALPINE ENGINEERING INC.
34510 HWY 6 / UNIT A9 / PO BOX 97
EDWARDS CO 81632 / 970.926.3373
WWW.ALPINECIVIL.COM

Project No:
1935.03

Sheet No:
C4.1

O:\Steamboat\School Renovations- 2019\DWG\Master\Strawberry Park ES\Details-SPES.dwg, 4/3/2020 9:45:01 AM, wadey

**LEGEND**

TREE PROTECTION FENCING

TREES TO BE REMOVED

RCRBD Record Set
T.A.

05/14/2020

CLEAR AND GRUB WITHIN LIMITS OF DISTURBANCE

CLEAR AND GRUB WITHIN LIMITS OF DISTURBANCE

CLEAR AND GRUB WITHIN LIMITS OF DISTURBANCE

1 L1.0 TREE PROTECTION FENCING

SIDEWALK TO REMIAN, PROTECT IN PLACE

CLEAR AND GRUB WITHIN LIMITS OF DISTURBANCE

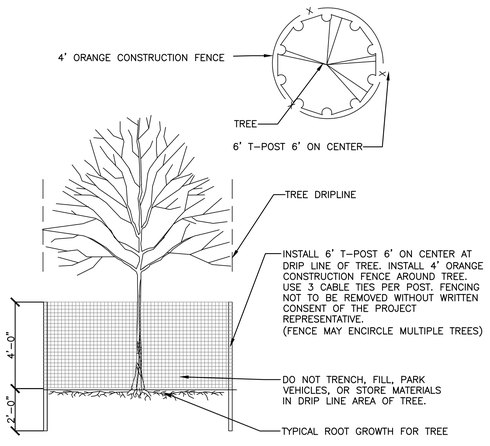


1 TREE PROTECTION FENCING

SCALE: NTS

1 L1.0 EXISTING CONDITIONS AND DEMOLITION PLANS

1" = 20' - 0"

0 10 40
5 20
SCALE: 1"=20'-0"


DHM DESIGN
900 S. Broadway
Suite 300
Denver, CO 80209
303.892.5566
www.dhmdesign.com



TAB Associates
*The Architectural Balance*
0056 Edwards Village Blvd.
Suite 210
Edwards, CO 81632
(970) 766-1470
fax: (970) 766-1471
email: tab@vail.net
www.tabassociates.com

Civil Engineer:
Alpine Engineering
970-926-3373

Structural Engineer:
Jirsa-Hedrick
303-839-1963

Mechanical Engineer:
BG BuildingWorks
970-949-6108

Electrical Engineer:
BG BuildingWorks
970-949-6108


Seal

# Strawberry Park Elementary School
## 39620 Amethyst Drive
Steamboat Springs, CO

Revisions:

| No | Description | Date |
|---|---|---|
| | | |

Issue Dates:
01/13/20 - SD
02/20/20 - DD
03/30/20 - CD
04/06/20 - CD

Sheet Title:
**EXISTING CONDITIONS AND DEMOLITION PLANS**

Project No:
1935.01

Sheet No:
L1.0

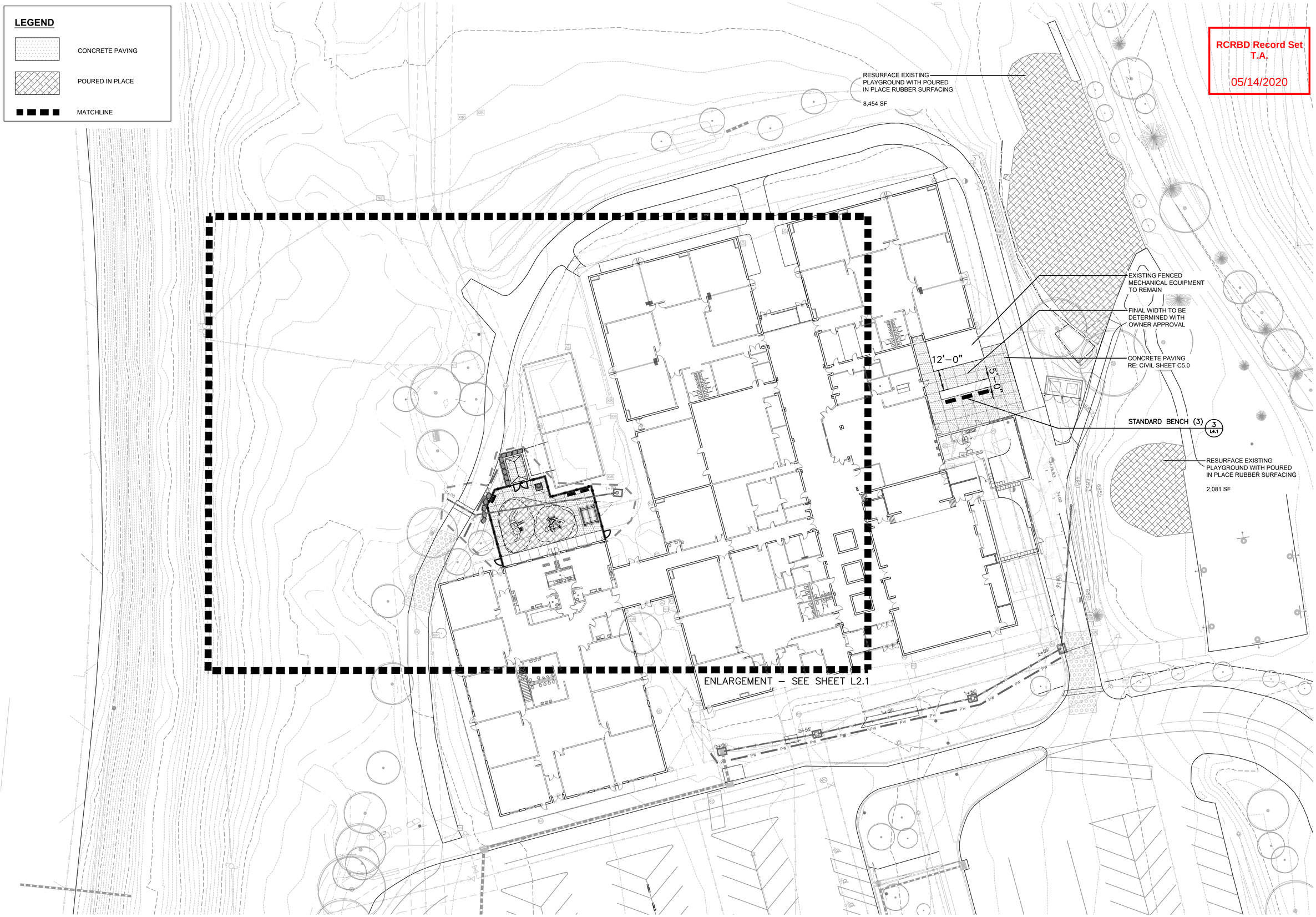


RCRBD Record Set
T.A.
05/14/2020

TAB Associates
The Architectural Balance
0056 Edwards Village Blvd.
Suite 210
Edwards, CO 8132
(970) 766-1470
fax: (970) 766-1471
email: tab@vail.net
www.tabassociates.com
Civil Engineer
Alpine Engineering
970-926-3373
Structural Engineer
Jirsa-Hedrick
303-839-1963
Mechanical Engineer
BG BuildingWorks
970-949-6108
Electrical Engineer
BG BuildingWorks
970-949-6108

Seal

MARK WILCOX
204
Surveyor
Original Date of Licensure
STATE OF COLORADO
LICENSED LANDSCAPE ARCHITECT
04.06.2020

# Strawberry Park Elementary School
## 39620 Amethyst Drive
### Steamboat Springs, CO

Revisions:

| No | Description | Date |
|---|---|---|

Issue Dates:
01/13/20 - SD
02/20/20 - DD
03/30/20 - CD
04/06/20 - CD

Sheet Title:
**SITE PLAN**

Project No:
1935.01

Sheet No:
L2.0

1 L2.0 SITE PLAN
1" = 20' - 0"

0 5 10 20 40
SCALE: 1"=20'-0"

DHM DESIGN
900 S. Broadway
Suite 300
Denver, CO 80209
303.892.5566
www.dhmdesign.com

RCRBD Record Set
T.A.
05/14/2020

TAB Associates
The Architectural Balance
0056 Edwards Village Blvd.
Suite 210
Edwards, CO 8132
(970) 766-1470
fax: (970) 766-1471
email: tab@vail.net
www.tabassociates.com
Civil Engineer
Alpine Engineering
970-926-3373
Structural Engineer
Jirsa-Hedrick
303-839-1963
Mechanical Engineer
BG BuildingWorks
970-949-6108
Electrical Engineer
BG BuildingWorks
970-949-6108

Seal

MARK WILCOX
204
Surveyor
Original Date of Licensure
STATE OF COLORADO
LICENSED LANDSCAPE ARCHITECT
04.06.2020

# Strawberry Park Elementary School
## 39620 Amethyst Drive
Steamboat Springs, CO

Revisions:

| No | Description | Date |
|---|---|---|

Issue Dates:
01/13/20 - SD
02/20/20 - DD
03/30/20 - CD
04/06/20 - CD

Sheet Title:
SITE PLAN ENLARGEMENT

Project No:
1935.01

Sheet No:
L2.1

1 L2.1 SITE PLAN ENLARGEMENT
1" = 10' - 0"

0 5 20
1 10
SCALE: 1"=10'-0"

DHM DESIGN
900 S. Broadway
Suite 300
Denver, CO 80209
303.892.5566
www.dhmdesign.com

## LEGEND

- SOD
- NATIVE SEED
- HWM — DECIDUOUS TREE
- EVERGREEN SHRUBS
- DECIDUOUS SHRUBS
- ORNAMENTAL GRASSES

RCRBD Record Set
T.A.
05/14/2020

2- SNOWBERRY
1- KALLAY'S COMPACT JUNIPER
2- ROCKY MOUNTAIN MAPLE
8- LITTLE BLUESTEM
2- BLUEMIST SPIREA

EXISTING LANDSCAPE (NATIVE SEED) DISTURBED BY CONSTRUCTION TO BE REPAIRED.

EXISTING LANDSCAPE (NATIVE SEED) DISTURBED BY CONSTRUCTION TO BE REPAIRED.

EXISTING LANDSCAPE (NATIVE SEED) DISTURBED BY CONSTRUCTION TO BE REPAIRED.

EXISTING LANDSCAPE (NATIVE SEED) DISTURBED BY CONSTRUCTION TO BE REPAIRED.

EXISTING LANDSCAPE AND IRRIGATION DISTURBED BY CONSTRUCTION TO BE REPAIRED AND FULL HEAD TO HEAD COVERAGE RESTORED.

EXISTING LANDSCAPE AND IRRIGATION DISTURBED BY CONSTRUCTION TO BE REPAIRED AND FULL HEAD TO HEAD COVERAGE RESTORED.

1 L3.0 LANDSCAPE PLAN
1" = 20' - 0"

0 10 40
5 20
SCALE: 1"=20'-0"


DHM DESIGN
900 S. Broadway
Suite 300
Denver, CO. 80209
303.892.5566
www.dhmdesign.com



TAB Associates
*The Architectural Balance*
0056 Edwards Village Blvd.
Suite 210
Edwards, CO 8132
(970) 766-1470
fax: (970) 766-1471
email: tab@vail.net
www.tabassociates.com

Civil Engineer:
Alpine Engineering
970-926-3373
Structural Engineer:
Jirsa-Hedrick
303-839-1963
Mechanical Engineer:
BG BuildingWorks
970-949-6108
Electrical Engineer:
BG BuildingWorks
970-949-6108


Seal

MARK WILCOX
204
Registered
Original Date of Licensure
STATE OF COLORADO
PROFESSIONAL
LANDSCAPE ARCHITECT
04.06.2020

# Strawberry Park Elementary School
## 39620 Amethyst Drive
Steamboat Springs, CO

Revisions:

| No | Description | Date |
|---|---|---|
| | | |

Issue Dates:
01/13/20 - SD
02/20/20 - DD
03/30/20 - CD
04/06/20 - CD

Sheet Title:
**LANDSCAPE PLAN**

Project No:
1935.01

Sheet No:
L3.0

## LANDSCAPE NOTES:

1. ALL PLANT MATERIALS SHALL MEET OR EXCEED CURRENT AMERICAN STANDARD FOR NURSERY STOCK ANSI 260.1 AND THE COLORADO NURSERY ACT AND ACCOMPANYING RULES AND REGULATIONS.
2. ALL APPROVED WORK WITHIN TREE PROTECTION ZONE/CRITICAL ROOT ZONE MUST BE ACCOMPLISHED WITH HAND TOOLS ONLY.
3. CONTRACTOR TO SUBMIT SOD CERTIFICATE TO THE OWNER'S REPRESENTATIVE FOR APPROVAL.
4. THE SODDED AREAS SHALL BE PREPARED WITH ORGANIC MATTER AT THE RATE OF 4 CUBIC YARDS PER 1,000 SQUARE FEET. REFER TO SPECIFICATION FOR NATIVE SEED LANDSCAPE AREA AMENDMENTS. THIS PREPARATION SHALL BE THOROUGHLY INCORPORATED INTO THE TOP 6" OF SOIL.
5. ALL PLANT MATERIAL ARE TO BE APPROVED BY THE OWNER'S REPRESENTATIVE PRIOR TO INSTALLATION.
6. NO SUBSTANTIAL CHANGE FROM THE APPROVED LANDSCAPE PLAN MAY OCCUR WITHOUT PRIOR REVIEW & APPROVAL BY THE OWNER'S REPRESENTATIVE WHICH MAY REQUIRE ADDITIONAL IRRIGATION TAPS FOR CHANGES DUE TO MORE WATER INTENSIVE LANDSCAPING.
7. ALL TREES IN SEEDED OR SODDED AREAS WILL HAVE A MULCH RING WITH NATURAL CEDAR FIBER MULCH AT A 3"-4" DEPTH AND AT LEAST 3'-4' DIAMETER. NO MULCH WILL BE PLACED AGAINST THE TRUNK OF THE TREE.
8. ANY TREE SUBSTITUTIONS MUST BE APPROVED BY OWNER'S REPRESENTATIVE PRIOR TO DELIVERY AND INSTALLATION.
9. ALL UTILITY EASEMENT SHALL REMAIN UNOBSTRUCTED AND FULLY ACCESSIBLE ALONG THEIR ENTIRE LENGTH FOR MAINTENANCE EQUIPMENT ENTRY.
10. THE CONTRACTOR SHALL FINE GRADE ALL AREAS TO BE PLANTED. THE CONTRACTOR SHALL REMOVE REQUIRED DEPTH OF SOIL ALONG WALKWAYS TO ACCOMMODATE SOD OR MULCH DEPTH.
11. THE CONTRACTOR SHALL MAINTAIN POSITIVE DRAINAGE AWAY FROM ALL STRUCTURES AND WALKWAYS. HAVE ALL FINE GRADING APPROVED PRIOR TO SEEDING.
12. ALL SHRUB BEDS TO BE MULCHED WITH PEA GRAVEL, 3" DEPTH, OVER FILTER FABRIC UNLESS OTHERWISE NOTED. SUBMIT SAMPLE FOR APPROVAL.
13. PRIOR TO SODDING, SEEDING, OR PLANTING, CONTRACTOR TO APPLY HERBICIDE TO ELIMINATE ALL WEED GROWTH WITHIN LANDSCAPE AREAS, PER SPECIFICATION.

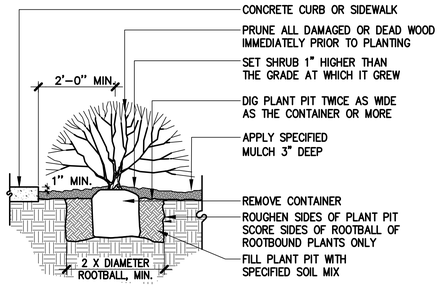


GENERAL NOTES

- HOLD GRADE 1" BELOW EDGE OF WALK OR CURB
- SHRUB PLANTING – REFER TO SHRUB BED LAYOUT FOR PLACEMENT OF SHRUBS.
- FOR GROUPINGS OF SHRUBS, MULCH ENTIRE PLANTING AREA. FOR INDIVIDUAL SHRUBS, MULCH PLANTING PIT AREA ONLY.
- GRADE EDGE OF PLANTING AREAS TO RETAIN MULCH.
- ANY BROKEN OR CRUMBLING ROOTBALL WILL BE REJECTED. REMOVING THE CONTAINERS WILL NOT BE AN EXCUSE FOR DAMAGED ROOTBALLS.

1 SHRUB PLANTING

NOT TO SCALE

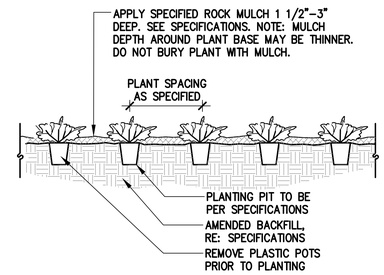


2 ORNAMENTAL GRASSES & PERENNIALS

NOT TO SCALE

## PLANT LIST

| COMMON NAME | BOTANICAL NAME | SIZE | COMMENTS |
|---|---|---|---|
| ORNAMENTAL TREES | | | |
| Rocky Mountain Maple | Acer glabrum | 6'-8' Ht. Clump form | B&B, specimen quality |
| DECIDUOUS SHRUBS | | | |
| Bluemist Spirea | Caryopteris x clandonensis 'Dark Knight' | 5 gal. | cont., 5 canes min., 12"-18" ht. |
| Mountain Snowberry | Symphoricarpos oreophilus | 5 gal. | cont., 5 canes min., 18"-24" ht. |
| CONIFEROUS/EVERGREEN SHRUBS | | | |
| Compact Oregon Grape Holly | Mahonia repens 'Compacta' | 5 gal. | cont., 5 canes min., 18"-24" ht. |
| Kallay's Compact Juniper | Juniperus × pfitzeriana 'Kallay's Compact' | 5 gal. | cont., 5 canes min., 18"-24" ht. |
| ORNAMENTAL GRASSES | | | |
| Little Bluestem | Schizachyrium Scoparium 'Blaze' | 1 gal. | Container, Well established |

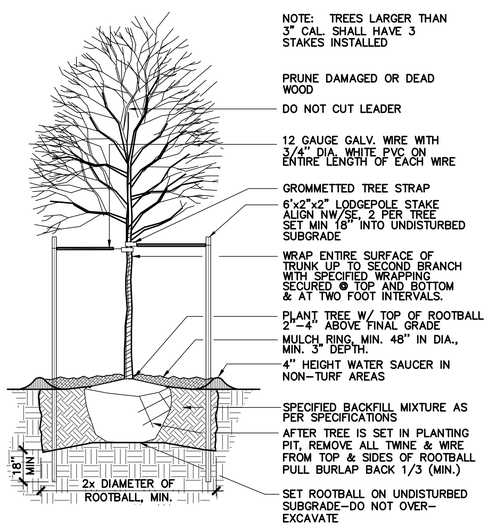


3 DECIDUOUS TREE PLANTING

NOT TO SCALE

1 L3.1 LANDSCAPE NOTES


DHM DESIGN
900 S. Broadway
Suite 300
Denver, CO 80209
303.892.5566
www.dhmdesign.com


RCRBD Record Set
T.A.
05/14/2020


TAB Associates
*The Architectural Balance*
0056 Edwards Village Blvd.
Suite 210
Edwards, CO 8132
(970) 766-1470
fax: (970) 766-1471
email: tab@vail.net
www.tabassociates.com
Civil Engineer:
Alpine Engineering
970-926-3373
Structural Engineer:
Jirsa-Hedrick
303-839-1963
Mechanical Engineer:
BG BuildingWorks
970-949-6108
Electrical Engineer:
BG BuildingWorks
970-949-6108


Seal

# Strawberry Park Elementary School
## 39620 Amethyst Drive
### Steamboat Springs, CO

Revisions:

| No | Description | Date |
|---|---|---|
| | | |

Issue Dates:
01/13/20 - SD
02/20/20 - DD
03/30/20 - CD
04/06/20 - CD

Sheet Title:
**LANDSCAPE NOTES**

Project No:
1935.01

Sheet No:
L3.1

## 1 STORAGE SHED

SCALE: NTS

MANUFACTURER: TUFF SHED
MODEL: GARDEN RANCH
COLOR: ALMOND BRITTLE
AS SUPPLIED BY TUFF SHED 1–800–289–8833 OR APPROVED EQUAL

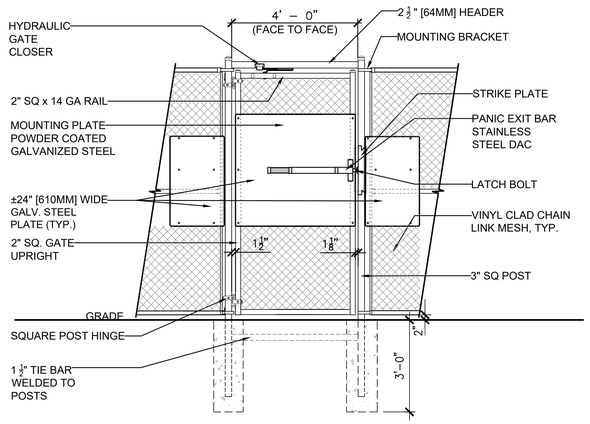


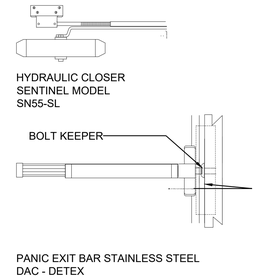


GATE ELEVATION

NOTES:
1. SPECIFICATIONS CAN BE CHANGED BY MERCHANT METALS ONLY.
2. PANEL TO BE +/-24" PERFORATED GALVENIZED STEEL

## 2 6' HT. CHAINLINK FENCE WITH 4' WIDE GATE AND PANIC BAR

COLOR: GREEN

SCALE: NTS

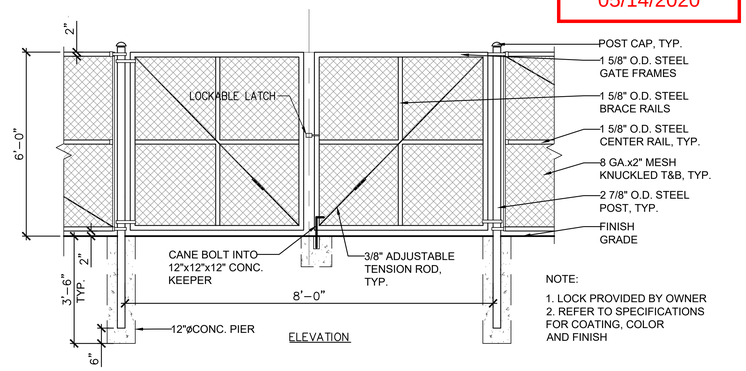


ELEVATION

NOTE:
1. LOCK PROVIDED BY OWNER
2. REFER TO SPECIFICATIONS FOR COATING, COLOR AND FINISH

## 3 8' WIDE DOUBLE GATE

SCALE: NTS

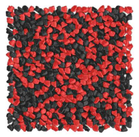

MIX COMPOSITION
50% BLACK GRANULES
50% RED GRANULES

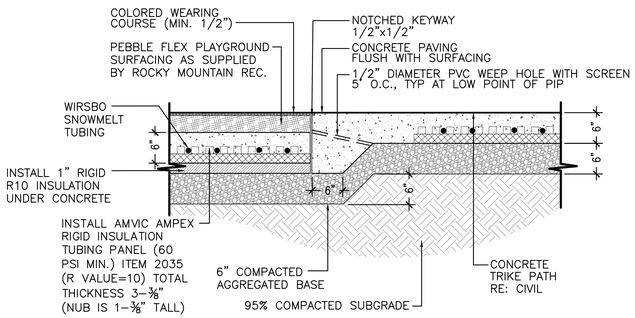


## 4 POURED IN PLACE SURFACING

SCALE: NTS

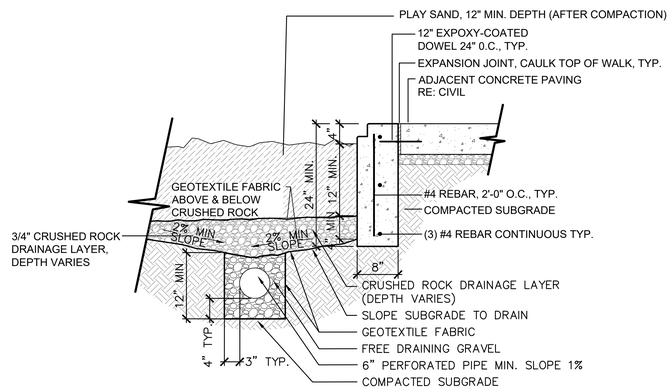


NOTE:
1. CONTROL JOINTS SHOULD OCCUR ON THE HORIZONTAL AND VERTICAL SURFACE EVERY 10' O.C. OR TO MATCH ADJACENT WALK JOINTS

## 5 SAND PLAY UNDERDRAIN

SCALE: NTS

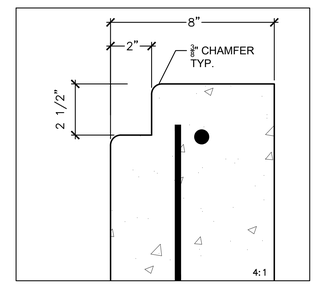


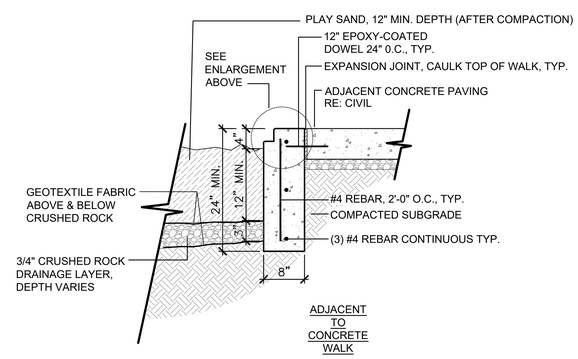


ADJACENT TO CONCRETE WALK

NOTES:
1. ALL REBAR TO BE TIED
2. LANDSCAPE ARCHITECT TO APPROVE ALL FORMS AND REBAR PRIOR TO POURING CONCRETE. 24 HOUR NOTICE REQUIRED.
3. EXPOSED CONCRETE TO HAVE MEDIUM BROOM FINISH
4. CONTROL JOINTS SHOULD OCCUR ON THE HORIZONTAL AND VERTICAL SURFACE EVERY 10' O.C. OR TO MATCH ADJACENT WALK JOINTS
5. FINAL DIMENSIONS OF SAND BOX TO BE COORDINATED WITH SAND BOX COVER MANUFACTURER FOR PROPER DIMENSIONS.

## 6 CONCRETE PLAY EDGE

SCALE: 1" = 1'–0"

RCRBD Record Set
T.A.
05/14/2020


TAB Associates
The Architectural Balance
0056 Edwards Village Blvd.
Suite 210
Edwards, CO 8132
(970) 766-1470
fax: (970) 766-1471
email: tab@vail.net
www.tabassociates.com

Civil Engineer
Alpine Engineering
970-926-3373
Structural Engineer
Jirsa-Hedrick
303-839-1963
Mechanical Engineer
BG BuildingWorks
970-949-6108
Electrical Engineer
BG BuildingWorks
970-949-6108


Seal

MARK WILCOX 204 Licensed Original Date of Licensure 8/4/2020 STATE OF COLORADO PROFESSIONAL LANDSCAPE ARCHITECT

# Strawberry Park Elementary School
## 39620 Amethyst Drive
Steamboat Springs, CO

Revisions:

| No | Description | Date |
|---|---|---|
| | | |

Issue Dates:
01/13/20 - SD
02/20/20 - DD
03/30/20 - CD
04/06/20 - CD

Sheet Title:
**SITE DETAILS**

1 L4.0 SITE DETAILS


DHM DESIGN
900 S. Broadway
Suite 300
Denver, CO 80209
303.892.5566
www.dhmdesign.com


Project No:
1935.01

Sheet No:
L4.0

landscape structures®

ISO 14001 CERTIFIED · ISO 9001 Certified

18811700

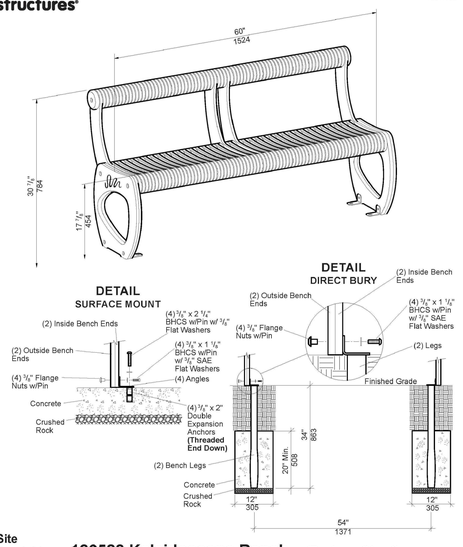


**Site Furnishings 186588 Kaleidoscope Bench, w/Back, wo/Handles** Sheet 1 of 2

601 7TH STREET SOUTH, DELANO, MINNESOTA 55328-8605 888-574-4679 LSI Install Help 888-438-6574 LSI Direct 763-972-5200 Int. FAX (763) 972-5188

© 2015 by Landscape Structures. All rights reserved.

Document #24737000

## 1 KALEIDOSCOPE BENCH

SCALE: NTS

MANUFACTURER: LANDSCAPE STRUCTURES
MODEL: 186588
AS SHOWN BY ROCKY MOUNTAIN RECREATION (303)-783-1452 OR FROM APPROVED VENDORS LIST PER SPECIFICATIONS.

landscape structures®

ISO 14001 CERTIFIED · ISO 9001 Certified

**SAFETY NOTE**
Choose a protective surfacing material that has a Head Height Value of at least the height of the Highest Accessible Part/Fall Height of the adjacent equipment. (Ref. ASTM F1487.)

214199

**PS = Playshaper**
**LW = Learning Wall - Mounted 1 3/4" Above The Playing Surface.**

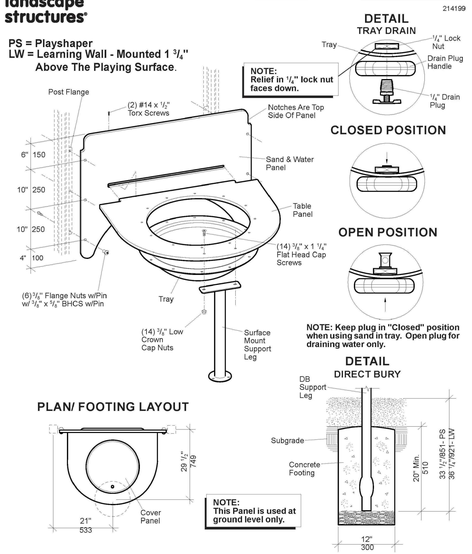


**PlayShaper® 111297/184865 Sand & Water Panel, Ground Level**

601 7TH STREET SOUTH, DELANO, MINNESOTA 55328-8605 888-574-4679 LSI Install Help 888-438-6574 LSI Direct 763-972-5200 Int. FAX (763) 972-5188

© 2015 by Landscape Structures. All rights reserved.

Document #21419900

## 2 SAND & WATER PANEL

SCALE: NTS

MANUFACTURER: LANDSCAPE STRUCTURES
MODEL: 111297/184865
AS SHOWN BY ROCKY MOUNTAIN RECREATION (303)-783-1452 OR FROM APPROVED VENDORS LIST PER SPECIFICATIONS.

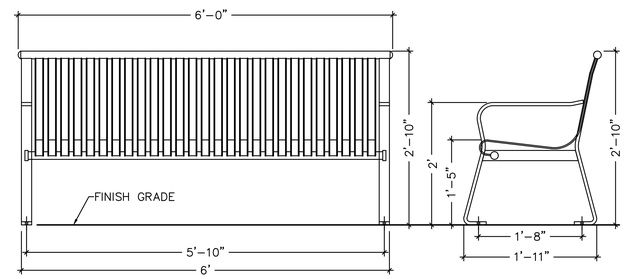


NOTES:
1. WAUSAU TILE MF2200 6' BENCH WITH BACK.
2. SURFACE MOUNT
3. COLOR: BLACK

## 3 STANDARD BENCH

SCALE: NTS

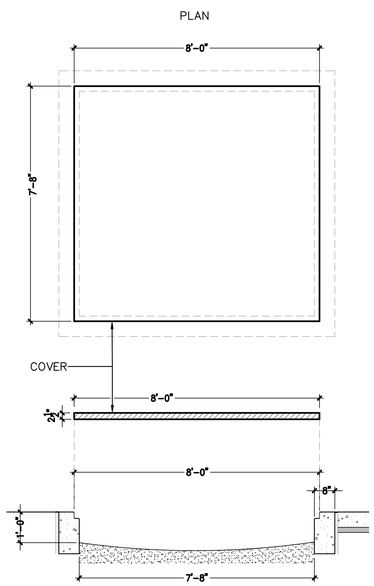


NOTES:

1. SANDBOX COVER TO BE FABRICATED WITH CUSTOM WIDTHS TO MATCH SAND BOX DIMENSIONS. NOTES REGARDING TRACK SURFACING AND ASPHALT DO NOT APPLY TO THIS APPLICATION

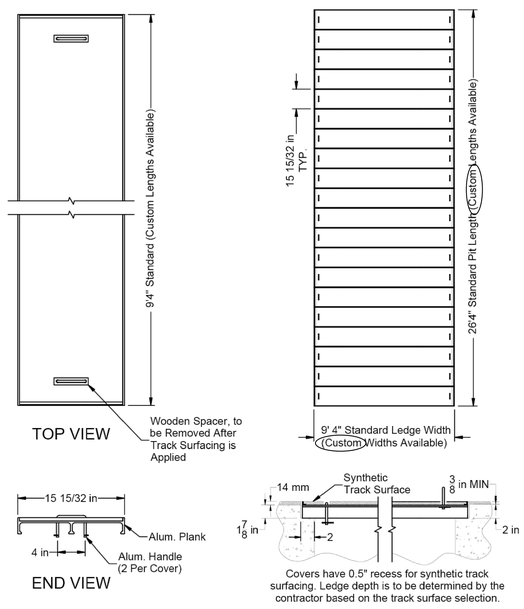


SportsEdge®
A Division of ABT, Inc.
P.O. Box 837 / 259 Murdock Road
Troutman, NC 28166
(800) 334-6057

PRODUCT DETAIL © 2019 ABT, Inc.

SAND PIT COVER

PART: SEPC.RL REV: 2/27/2019

Proprietary rights of ABT, Inc. are included in the information disclosed herein. The recipient, by accepting this document, agrees that neither this document nor the information disclosed herein nor any part thereof shall be copied, reproduced or transferred to others for manufacturing or for any other purpose except as specifically authorized in writing by ABT, Inc.

DISCLAIMER. The customer and the customer's architects, engineers, consultants and other professionals are completely responsible for the selection, installation, and maintenance of any product purchased from ABT, and EXCEPT AS EXPRESSLY PROVIDED IN ABT'S STANDARD WARRANTIES, ABT MAKES NO WARRANTY, EXPRESS OR IMPLIED, AS TO THE SUITABLITY, DESIGN, MERCHANTABILITY, OR FITNESS OF THE PRODUCT FOR THE CUSTOMER'S APPLICATION. Copies of ABT's standard warranties are available upon request.

## 4 SANDBOX COVER

SCALE: NTS

RCRBD Record Set
T.A.
05/14/2020

TAB Associates
*The Architectural Balance*
0056 Edwards Village Blvd.
Suite 215
Edwards, CO 81632
(970) 766-1470
fax: (970) 766-1471
email: tab@vail.net
www.tabassociates.com

Civil Engineer
Alpine Engineering
970-926-3373
Structural Engineer
Jirsa-Hedrick
303-839-1963
Mechanical Engineer
BG BuildingWorks
970-949-6108
Electrical Engineer
BG BuildingWorks
970-949-6108

Seal

MARK WILCOX 204 · Original Date of Licensure · STATE OF COLORADO · LICENSED LANDSCAPE ARCHITECT

# Strawberry Park Elementary School
## 39620 Amethyst Drive
Steamboat Springs, CO

Revisions:

| No | Description | Date |
|---|---|---|
| | | |

Issue Dates:
01/13/20 - SD
02/20/20 - DD
03/30/20 - CD
04/06/20 - CD

Sheet Title:
**SITE DETAILS**

Project No: 1935.01

Sheet No: L4.1

1 / L4.1 SITE DETAILS

DHM DESIGN
900 S. Broadway
Suite 300
Denver, CO 80209
303.892.5566
www.dhmdesign.com

RCRBD Record Set
T.A.

05/14/2020

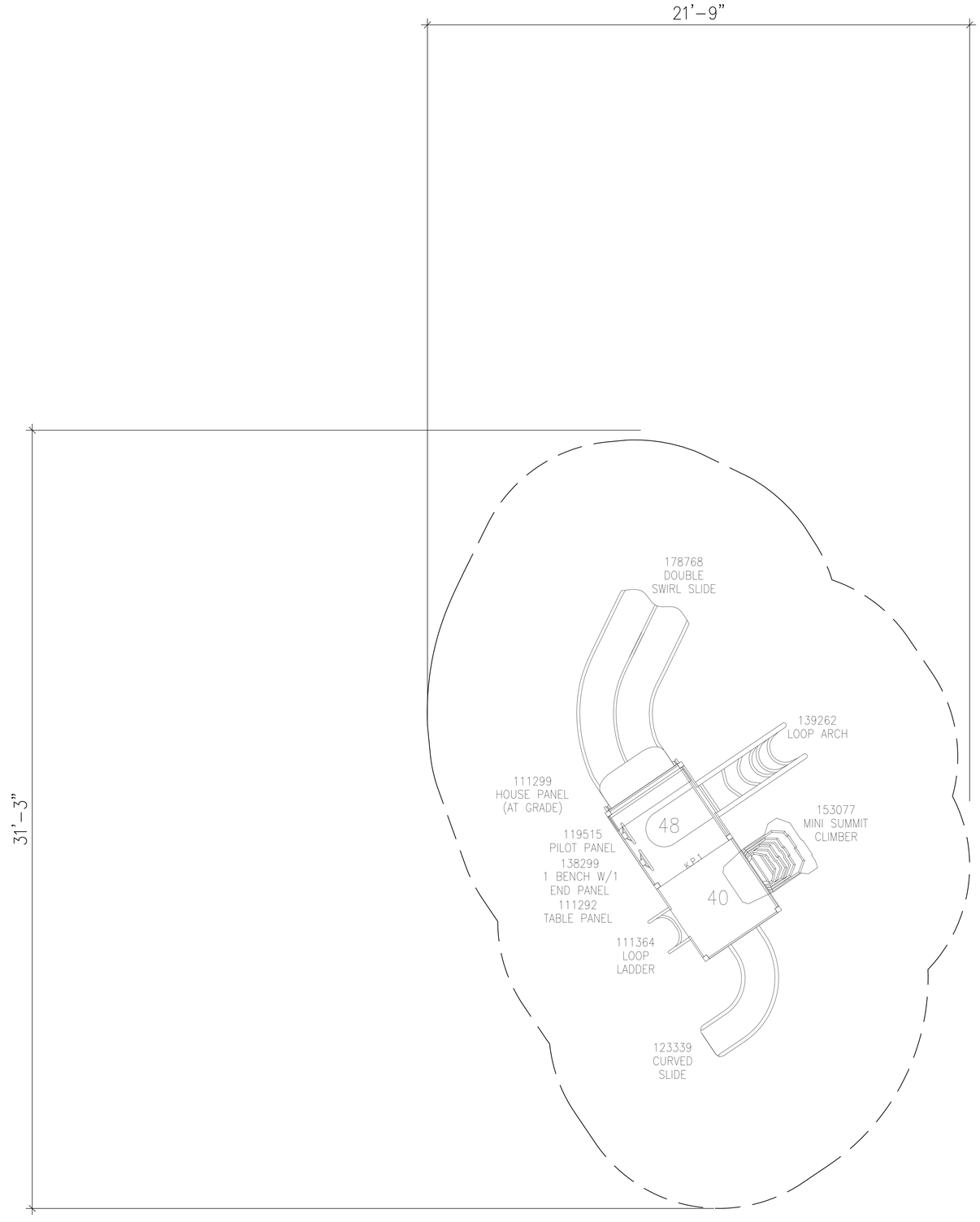


1 PLAY STRUCTURE 1 – PLAY SHAPER FOR AGES 2–5 WITH MINI SUMMIT CLIMBER, DOUBLE SLIDE AND CURED SLIDE

LANDSCAPE STRUCTURES MODEL AS SHOWN OR FROM APPROVED VENDORS LIST PER SPECIFICATIONS.

SCALE: NTS

1 / L4.2 SITE DETAILS


DHM DESIGN
900 S. Broadway
Suite 300
Denver, CO 80209
303.892.5566
www.dhmdesign.com



TAB Associates
*The Architectural Balance*
0056 Edwards Village Blvd.
Suite 210
Edwards, CO 8132
(970) 766-1470
fax: (970) 766-1471
email: tab@vail.net
www.tabassociates.com

Civil Engineer:
Alpine Engineering
970-926-3373
Structural Engineer:
Jirsa-Hedrick
303-839-1963
Mechanical Engineer:
BG BuildingWorks
970-949-6108
Electrical Engineer:
BG BuildingWorks
970-949-6108


Seal

# Strawberry Park Elementary School
## 39620 Amethyst Drive
Steamboat Springs, CO

Revisions:

| No | Description | Date |
|---|---|---|
| | | |

Issue Dates:
01/13/20 - SD
02/20/20 - DD
03/30/20 - CD
04/06/20 - CD

Sheet Title:
**SITE DETAILS**

Project No:
1935.01

Sheet No:
L4.2

RCRBD Record Set
T.A.

05/14/2020

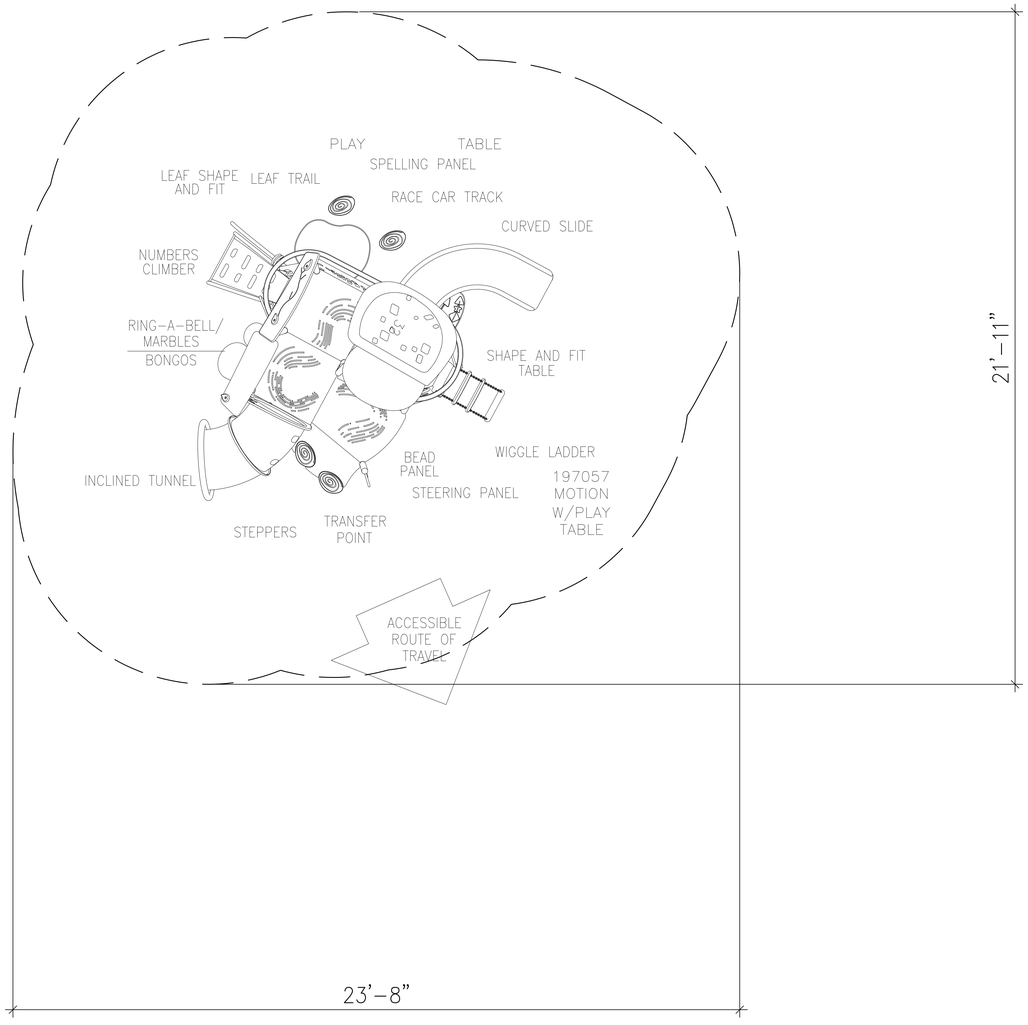

1 PLAY STRUCTURE 2 – SMART PLAY MOTION FOR AGES 2–5

LANDSCAPE STRUCTURES MODEL AS SHOWN OR FROM APPROVED VENDORS LIST PER SPECIFICATIONS.

SCALE: NTS

1 L4.3 SITE DETAILS


DHM DESIGN
900 S. Broadway
Suite 300
Denver, CO 80209
303.892.5566
www.dhmdesign.com



TAB Associates
*The Architectural Balance*
0056 Edwards Village Blvd.
Suite 210
Edwards, CO 8132
(970) 766-1470
fax: (970) 766-1471
email: tab@vail.net
www.tabassociates.com

Civil Engineer:
Alpine Engineering
970-926-3373

Structural Engineer:
Jirsa-Hedrick
303-839-1963

Mechanical Engineer:
BG BuildingWorks
970-949-6108

Electrical Engineer:
BG BuildingWorks
970-949-6108


Seal

# Strawberry Park Elementary School
## 39620 Amethyst Drive
Steamboat Springs, CO

Revisions:

| No | Description | Date |
|---|---|---|
| | | |

Issue Dates:
01/13/20 - SD
02/20/20 - DD
03/30/20 - CD
04/06/20 - CD

Sheet Title:
**SITE DETAILS**

Project No:
1935.01

Sheet No:
L4.3

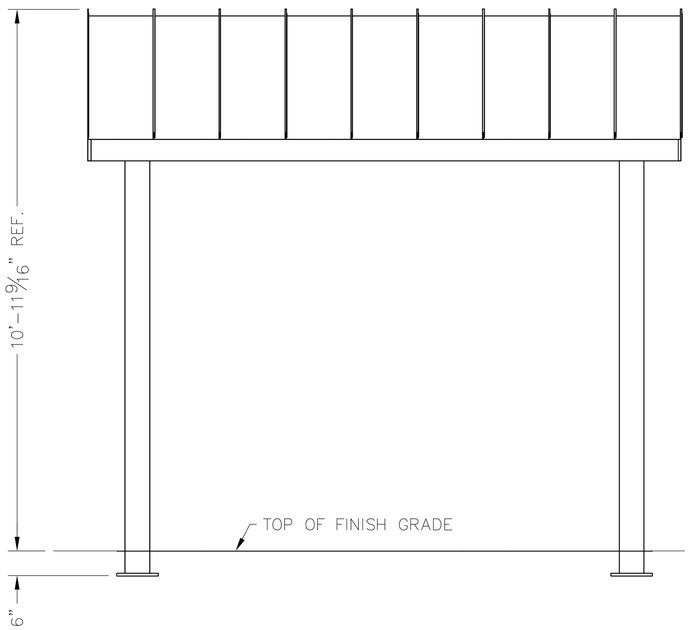


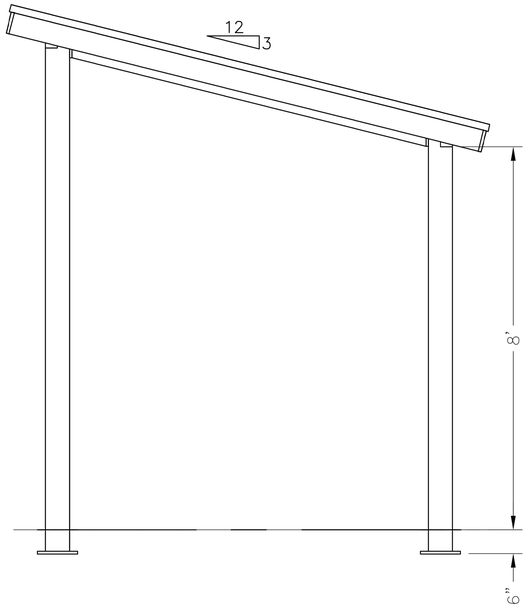


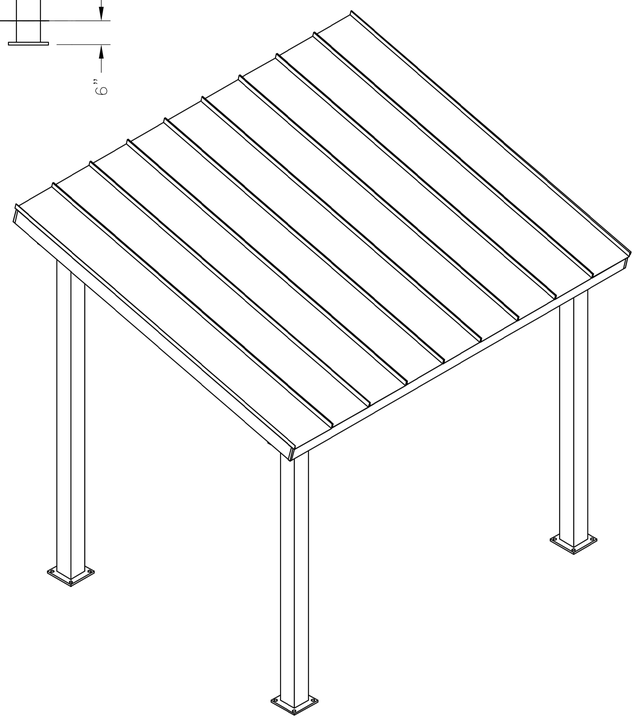

PRELIMINARY: NOT FOR CONSTRUCTION

RCRBD Record Set
T.A.
05/14/2020

ICON
Shelter Systems Inc
DISTINCTIVE STEEL SHELTERS
WWW.ICONSHELTERS.COM
COPYRIGHT 2004, ICON SHELTER SYSTEMS, INC.

1455 LINCOLN AVE.
HOLLAND MI, 49423

616.396.0919
800.748.0985
616.396.0944 FX

Elevation

DRAWN BY: ACP
DATE: 3/12/2018
JOB NO.: 51263
REVISION: A
BUILDING TYPE: MP10X12TS-P3
PROJECT NAME:

SHEET 1.0

Engineering\IconStandard\Blocks\Titles\ICONPRETI
OF-73-01-42

DWG:ing\Standards\Shelters\MP\10X12\TS-P3-20-120-30\Drawings\Preliminary\MP10x12TS-P3-20-120-30~51263.DWG

1A SHADE SHELTER – 10'x12' MONOSLOPE

MANUFACTURER: ICON SHELTERS
MODEL: MP10x12TS-P3
COLOR: FRAME-PEDESTAL GRAY ROOF-BRITE RED
AS SUPPLIED BY ROCKY MOUNTAIN RECREATION (303)-783-1452 OR APPROVED EQUAL

SCALE: NTS

1 L4.4 SITE DETAILS

DHM DESIGN
900 S. Broadway
Suite 300
Denver, CO 80209
303.892.5566
www.dhmdesign.com

TAB Associates
The Architectural Balance
0056 Edwards Village Blvd.
Suite 210
Edwards, CO 8132
(970) 766-1470
fax: (970) 766-1471
email: tab@vail.net
www.tabassociates.com
Civil Engineer:
Alpine Engineering
970-926-3373
Structural Engineer:
Jirsa-Hedrick
303-839-1963
Mechanical Engineer:
BG BuildingWorks
970-949-6108
Electrical Engineer:
BG BuildingWorks
970-949-6108

Seal

MARK WILCOX
204
Registered
Original Date of Licensure
STATE OF COLORADO
PROFESSIONAL
LANDSCAPE ARCHITECT
04.13.2020

# Strawberry Park Elementary School
## 39620 Amethyst Drive
Steamboat Springs, CO

Revisions:

| No | Description | Date |
|---|---|---|
| | | |

Issue Dates:
01/13/20 - SD
02/20/20 - DD
03/30/20 - CD
04/06/20 - CD

Sheet Title:
SITE DETAILS

Project No: 1935.01

Sheet No: L4.4

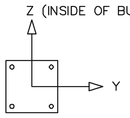


THESE FOUNDATION LOADS ARE FOR ESTIMATING PURPOSE ONLY.
THE ACTUAL LOADS WILL BE DETERMINED IN THE FINAL ENGINEERING

CL1

| LOADS TO FOUNDATION (KIPS, IN-KIPS) | FOUNDATION LOADS | | | | |
|---|---|---|---|---|---|
| LOAD COMBINATION | AXIAL (Fx) | SHEAR (Fy) | SHEAR (Fz) | MOMENT (My) | MOMENT (Mz) |
| DL | 0.40 | −0.02 | 0.03 | −0.84 | −0.93 |
| SL | 0.67 | −0.06 | 0.06 | −1.95 | −2.28 |
| W−UPLIFT | −0.62 | 0.09 | 0.19 | −15.13 | 3.82 |
| W−FY | −0.29 | 0.15 | 0.08 | −6.37 | 9.25 |
| W−FZ | 0.63 | −0.11 | −0.27 | 21.50 | −4.34 |
| E−FY | −0.02 | 0.03 | 0.00 | 0.04 | 2.65 |
| E−Z | −0.03 | 0.00 | −0.04 | 2.63 | −0.06 |

CL2

| LOADS TO FOUNDATION (KIPS, IN-KIPS) | FOUNDATION LOADS | | | | |
|---|---|---|---|---|---|
| LOAD COMBINATION | AXIAL (Fx) | SHEAR (Fy) | SHEAR (Fz) | MOMENT (My) | MOMENT (Mz) |
| DL | 0.37 | 0.01 | 0.03 | −1.33 | 0.63 |
| SL | 0.50 | 0.03 | 0.06 | −3.09 | 1.33 |
| W−UPLIFT | −1.86 | −0.18 | −0.25 | 16.78 | −7.64 |
| W−FY | −1.55 | 0.19 | −0.22 | 14.65 | 8.19 |
| W−FZ | 1.92 | 0.16 | 0.35 | −23.18 | 6.70 |
| E−FY | 0.02 | −0.03 | 0.00 | 0.03 | −2.39 |
| E−Z | 0.03 | 0.00 | 0.03 | −1.98 | −0.03 |

NOTES:
- TABLE SHOWS UNFACTORED SERVICE LOADS
- A FOUNDATION DESIGN HAS NOT BEEN PERFORMED BY ICON SHELTER SYSTEMS INC.
- A LICENSED ENGINEER FAMILIAR WITH SOIL CONDITIONS AT CONSTRUCTION SITE MUST PERFORM A FOUNDATION DESIGN.
- THE STRUCTURE HAS BEEN ENGINEERED AS AN OPEN STRUCTURE.
- CONSULT ICON SHELTER SYSTEMS INC. IF THE STRUCTURE IS TO BE ENCLOSED.
- COORDINATES ARE LOCAL TO THE COLUMN

DEFINITIONS:
DL = SERVICE LEVEL DEAD LOAD REACTION WITH THE GREATEST AXIAL LOAD
SL = SERVICE LEVEL SNOW LOAD REACTION WITH THE GREATEST AXIAL LOAD
W−UL = SERVICE LEVEL WIND LOAD REACTION WITH THE GREATEST UPLIFT LOAD
W−Y = SERVICE LEVEL WIND LOAD REACTION WITH THE GREATEST MAGNITUDE OF SHEAR IN THE LOCAL Y DIRECTION
W−Z = SERVICE LEVEL WIND LOAD REACTION WITH THE GREATEST SHEAR VALUE ACTING IN THE SAME DIRECTION AS THE DL SHEAR LOAD
E−Y = SERVICE LEVEL SEISMIC LOAD REACTION WITH THE GREATEST MAGNITUDE OF SHEAR IN THE LOCAL Y DIRECTION
E−Z = SERVICE LEVEL SEISMIC LOAD REACTION WITH THE GREATEST MAGNITUDE OF SHEAR IN THE LOCAL Z DIRECTION

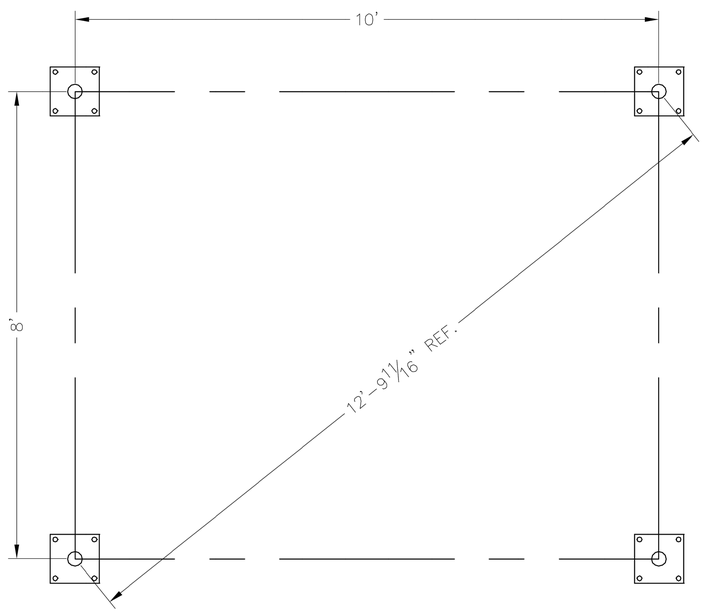


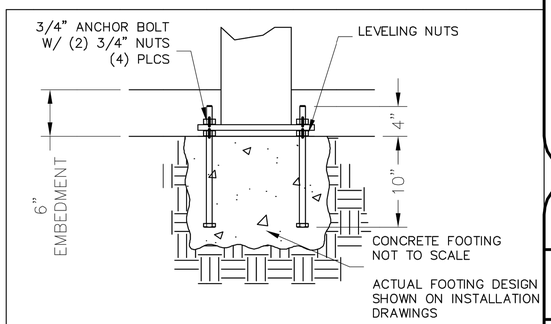


PRELIMINARY DRAWINGS SHOWN AS 6" BURIED

STANDARD BASE CONNECTION
COLUMN TYPE: A (6" BURIED)

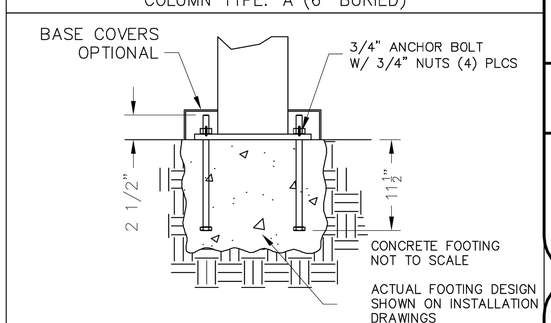


OPTIONAL BASE CONNECTION
COLUMN TYPE: B (SURFACE MOUNT W/ COVERS)

1B SHADE SHELTER – 10'x12' MONOSLOPE

MANUFACTURER: ICON SHELTERS
MODEL: MP10x12TS−P3
COLOR: FRAME−PEDESTAL GRAY ROOF−BRITE RED
AS SUPPLIED BY ROCKY MOUNTAIN RECREATION (303)−783−1452 OR APPROVED EQUAL

SCALE: NTS

1 / L4.5 SITE DETAILS

PRELIMINARY: NOT FOR CONSTRUCTION

RCRBD Record Set
T.A.
05/14/2020

ICON Shelter Systems Inc
DISTINCTIVE STEEL SHELTERS
WWW.ICONSHELTERS.COM
COPYRIGHT 2004, ICON SHELTER SYSTEMS, INC.
1455 LINCOLN AVE.
HOLLAND MI, 49423

616.396.0919
800.748.0985
616.396.0944 FX

Anchor Bolt Layout

| | |
|---|---|
| DRAWN BY: | ACP |
| DATE: | 3/12/2018 |
| JOB NO.: | 51263 |
| REVISION: | A |
| BUILDING TYPE: | MP10X12TS−P3 |
| PROJECT NAME: | |

SHEET 2.0

Engineering\AcadStandard\Blocks\Titles\ICONPRETI QF−73−01−42

DHM DESIGN
900 S. Broadway
Suite 300
Denver, CO 80209
303.892.5566
www.dhmdesign.com

TAB Associates
The Architectural Balance
0056 Edwards Village Blvd.
Suite 210
Edwards, CO 81632
(970) 766-1470
fax: (970) 766-1471
email: tab@vail.net
www.tabassociates.com
Civil Engineer
Alpine Engineering
970-926-3373
Structural Engineer
Jirsa-Hedrick
303-839-1963
Mechanical Engineer
BG BuildingWorks
970-949-6108
Electrical Engineer
BG BuildingWorks
970-949-6108

Seal

**Strawberry Park Elementary School**
**39620 Amethyst Drive**
**Steamboat Springs, CO**

Revisions:

| No | Description | Date |
|---|---|---|
| | | |

Issue Dates:
01/13/20 - SD
02/20/20 - DD
03/30/20 - CD
04/06/20 - CD

Sheet Title:
**SITE DETAILS**

Project No:
1935.01

Sheet No:
L4.5

RCRBD Record Set
T.A.
05/14/2020

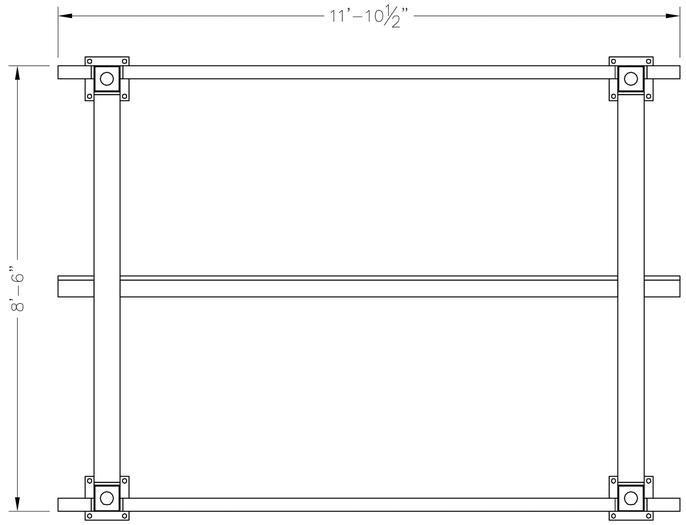


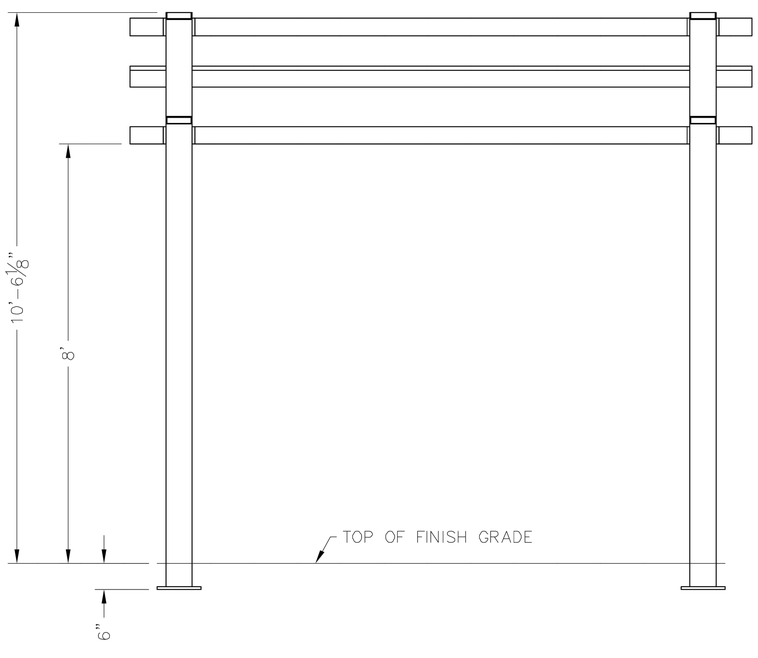


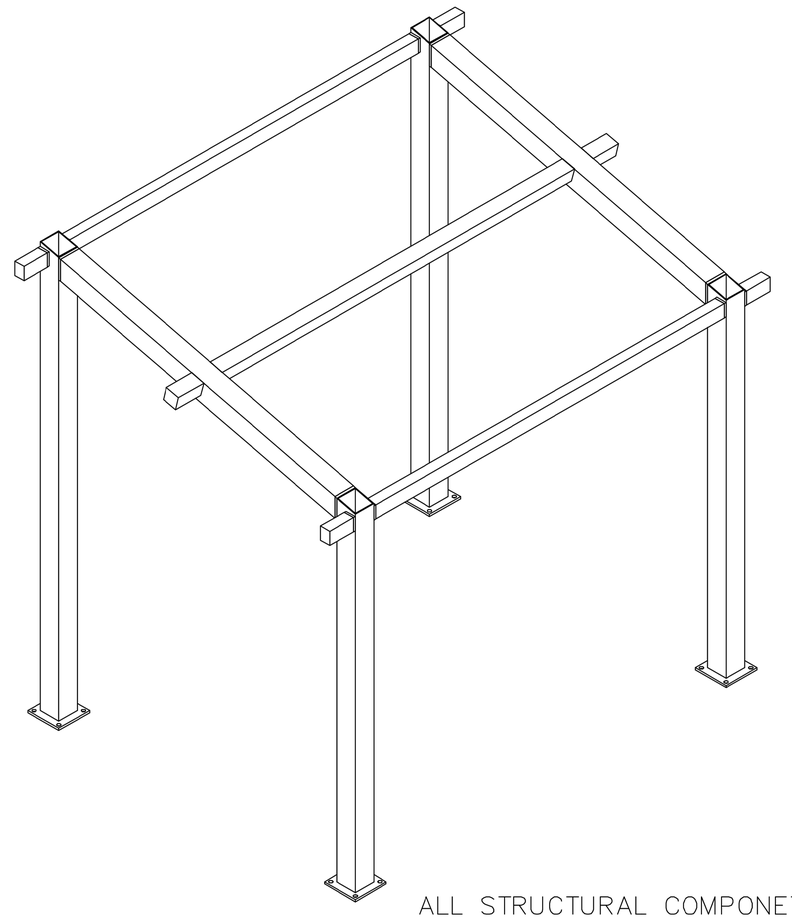

PRELIMINARY: NOT FOR CONSTRUCTION

ALL STRUCTURAL COMPONETS WILL BE:
TUBE: ASTM A500 GRADE B
PLATE: ASTM A36
BOLTS: ASTM A325
NUTS: ASTM A563
WELDING: GMAW

NOTE:
COLUMN SIZE: HSS 5x5x3/16

1C SHADE SHELTER – 10'x12' MONOSLOPE

MANUFACTURER: ICON SHELTERS
MODEL: MP10x12TS-P3
COLOR: FRAME-PEDESTAL GRAY ROOF-BRITE RED
AS SUPPLIED BY ROCKY MOUNTAIN RECREATION (303)-783-1452 OR APPROVED EQUAL

SCALE: NTS

1 / L4.6 SITE DETAILS

ICON Shelter Systems Inc
DISTINCTIVE STEEL SHELTERS
WWW.ICONSHELTERS.COM
COPYRIGHT 2004, ICON SHELTER SYSTEMS, INC.
1455 LINCOLN AVE.
HOLLAND MI, 49423
616.396.0919
800.748.0985
616.396.0944 FX

Frame

| | |
|---|---|
| DRAWN BY: | ACP |
| DATE: | 3/12/2018 |
| JOB NO.: | 51263 |
| REVISION: | A |
| BUILDING TYPE: | MP10X12TS-P3 |
| PROJECT NAME: | |

SHEET 3.0

DWG:inq\Standards\Shelters\MP\10X12\TS-P3-20-120-30\Drawings\Preliminary\MP10x12TS-P3-20-120-30~51263.DWG

Engineering\AcadStandard\Blocks\Titles\CONPRETB
QF-73-01-42

DHM DESIGN
900 S. Broadway
Suite 300
Denver, CO 80209
303.892.5566
www.dhmdesign.com

TAB Associates
The Architectural Balance
0056 Edwards Village Blvd.
Suite 210
Edwards, CO 8132
(970) 766-1470
fax: (970) 766-1471
email: tab@vail.net
www.tabassociates.com
Civil Engineer:
Alpine Engineering
970-926-3373
Structural Engineer:
Jirsa-Hedrick
303-839-1963
Mechanical Engineer:
BG BuildingWorks
970-949-6108
Electrical Engineer:
BG BuildingWorks
970-949-6108

Seal

MARK WILCOX
204
Registered
Original Date of Licensure
STATE OF COLORADO
PROFESSIONAL
LANDSCAPE ARCHITECT
04.06.2020

# Strawberry Park Elementary School
## 39620 Amethyst Drive
Steamboat Springs, CO

Revisions:

| No | Description | Date |
|---|---|---|
| | | |

Issue Dates:
01/13/20 - SD
02/20/20 - DD
03/30/20 - CD
04/06/20 - CD

Sheet Title:
SITE DETAILS

Project No:
1935.01

Sheet No:
L4.6

FASTENERS

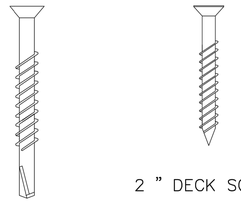

2 3/4" WOOD TO METAL SCREW

2 " DECK SCREW

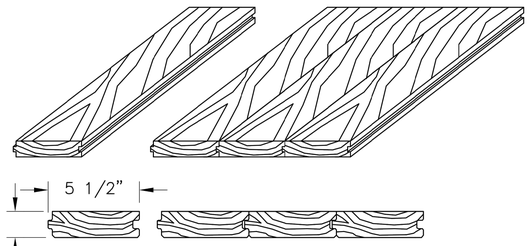

5 1/2"

1 1/2"

TONGUE & GROOVE BOARD SECTION

NOTE: STANDARD DETAILS SHOWN ACTUAL BUILDING MAY VARY

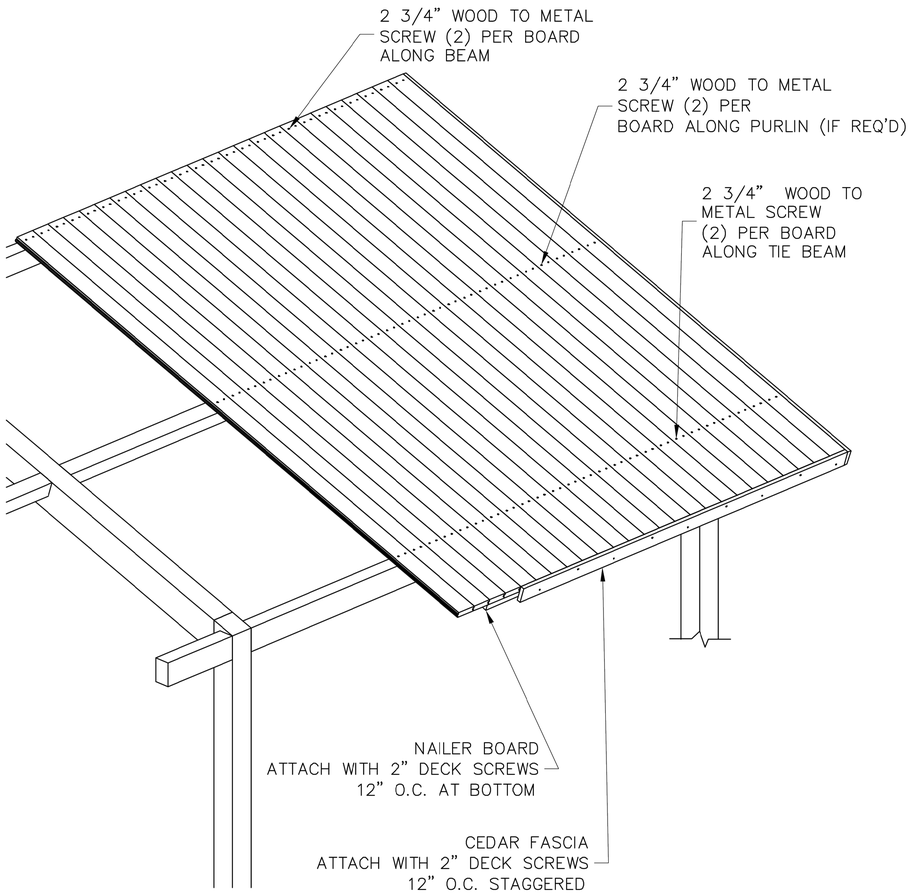


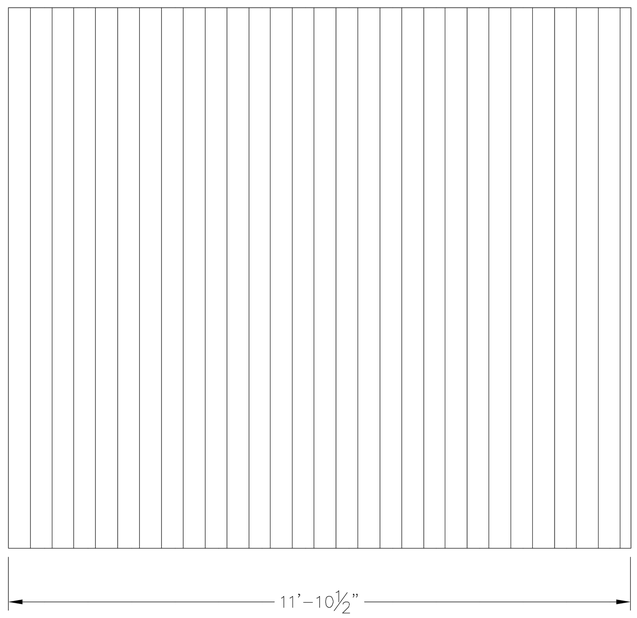


PRELIMINARY: NOT FOR CONSTRUCTION

RCRBD Record Set
T.A.
05/14/2020

ICON Shelter Systems Inc
DISTINCTIVE STEEL SHELTERS
WWW.ICONSHELTERS.COM
COPYRIGHT 2004, ICON SHELTER SYSTEMS, INC.

1455 LINCOLN AVE.
HOLLAND MI, 49423

616.396.0919
800.748.0985
616.396.0944 FX

Roof Layout

| | |
|---|---|
| DRAWN BY: | ACP |
| DATE: | 3/12/2018 |
| JOB NO.: | 51263 |
| REVISION: | A |
| BUILDING TYPE: | MP10X12TS-P3 |
| PROJECT NAME: | |

SHEET
4.0
Engineering\AcadStandard\Blocks\Titles\CONPRETS
QF-73-01-42

1D SHADE SHELTER – 10'x12' MONOSLOPE

MANUFACTURER: ICON SHELTERS
MODEL: MP10x12TS-P3
COLOR: FRAME-PEDESTAL GRAY ROOF-BRITE RED
AS SUPPLIED BY ROCKY MOUNTAIN RECREATION (303)-783-1452 OR APPROVED EQUAL

SCALE: NTS

1 L4.7 SITE DETAILS


DHM DESIGN
900 S. Broadway
Suite 300
Denver, CO 80209
303.892.5566
www.dhmdesign.com



TAB Associates
The Architectural Balance
0056 Edwards Village Blvd.
Suite 210
Edwards, CO 8132
(970) 766-1470
fax: (970) 766-1471
email: tab@vail.net
www.tabassociates.com

Civil Engineer:
Alpine Engineering
970-926-3373
Structural Engineer:
Jirsa-Hedrick
303-839-1963
Mechanical Engineer:
BG BuildingWorks
970-949-6108
Electrical Engineer:
BG BuildingWorks
970-949-6108


Seal

MARK WILCOX
204
Registered
Original Date of Licensure
STATE OF COLORADO
PROFESSIONAL LANDSCAPE ARCHITECT
04.13.2020

# Strawberry Park Elementary School
## 39620 Amethyst Drive
Steamboat Springs, CO

Revisions:

| No | Description | Date |
|---|---|---|
| | | |

Issue Dates:
01/13/20 - SD
02/20/20 - DD
03/30/20 - CD
04/06/20 - CD

Sheet Title:
SITE DETAILS

Project No:
1935.01

Sheet No:
L4.7

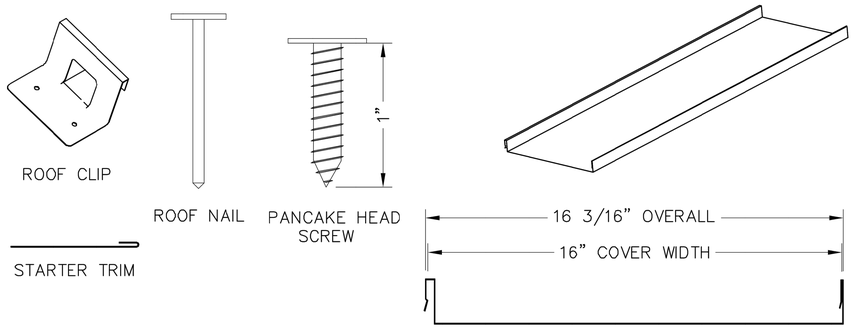


NOTE: STANDARD DETAILS SHOWN
ACTUAL BUILDING MAY VARY

STANDING SEAM PANEL SECTION

**INSTALLER TO FIELD CUT ALL ROOF PANELS**

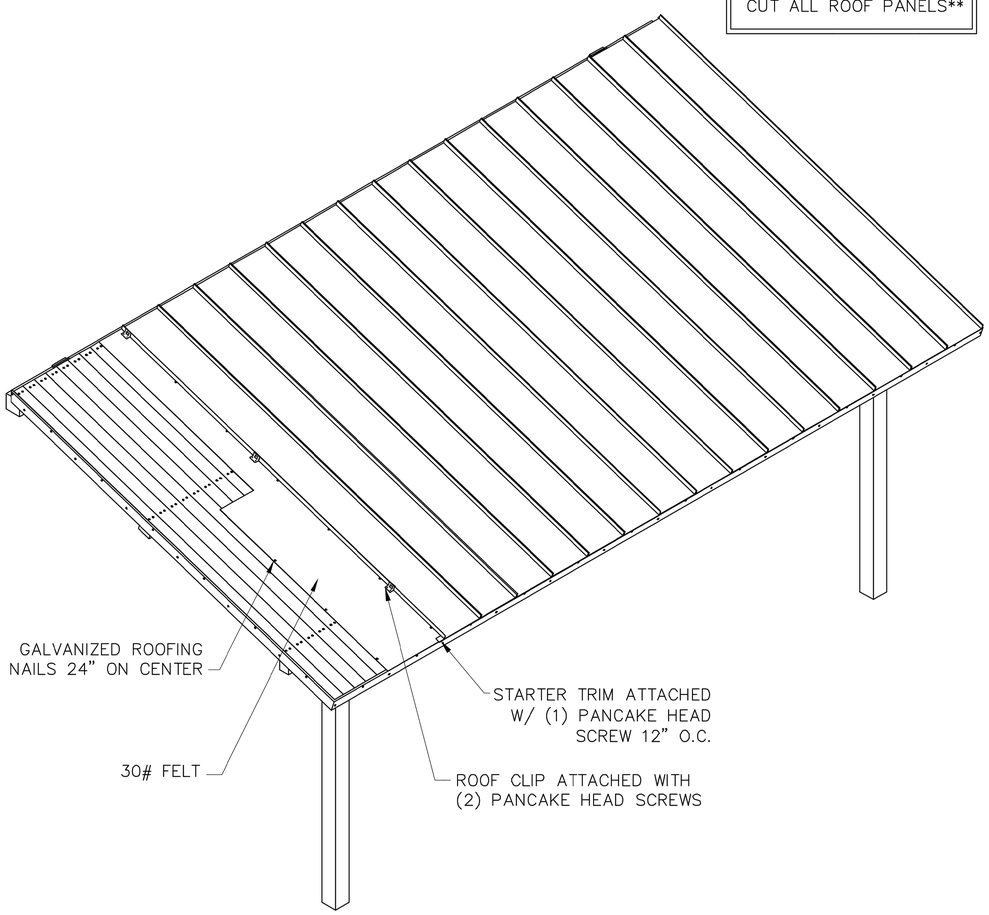


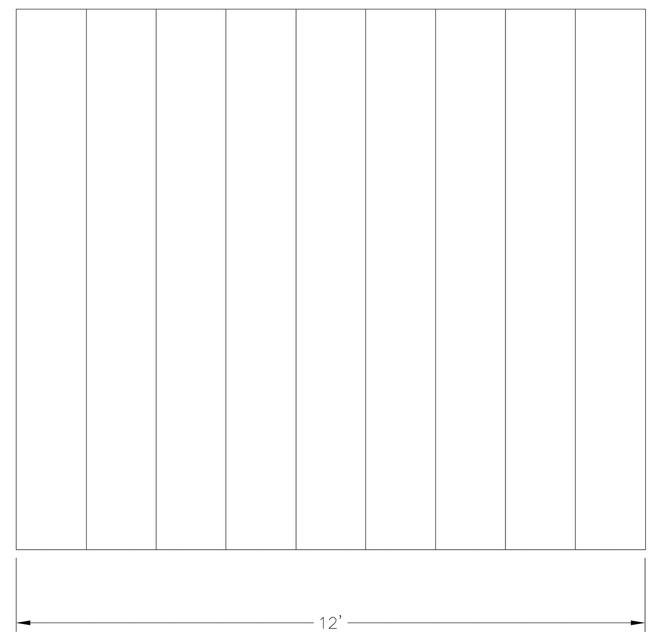


1E SHADE SHELTER – 10'x12' MONOSLOPE

MANUFACTURER: ICON SHELTERS
MODEL: MP10x12TS–P3
COLOR: FRAME–PEDESTAL GRAY ROOF–BRITE RED
AS SUPPLIED BY ROCKY MOUNTAIN RECREATION (303)–783–1452 OR APPROVED EQUAL

SCALE: NTS

1 L4.8 SITE DETAILS

PRELIMINARY: NOT FOR CONSTRUCTION

RCRBD Record Set
T.A.
05/14/2020

ICON Shelter Systems Inc
DISTINCTIVE STEEL SHELTERS
WWW.ICONSHELTERS.COM
COPYRIGHT 2004, ICON SHELTER SYSTEMS, INC.
1455 LINCOLN AVE.
HOLLAND MI, 49423

616.396.0919
800.748.0985
616.396.0944 FX

Roof Layout

| | |
|---|---|
| DRAWN BY: | ACP |
| DATE: | 3/12/2018 |
| JOB NO.: | 51263 |
| REVISION: | A |
| BUILDING TYPE: | MP10X12TS–P3 |
| PROJECT NAME: | |

SHEET 4.1

Engineering\IconStandard\Blocks\Titles\ICONPRETB
0F-73-01-42

DHM DESIGN
900 S. Broadway
Suite 300
Denver, CO 80209
303.892.5566
www.dhmdesign.com

TAB Associates
The Architectural Balance
0056 Edwards Village Blvd.
Suite 210
Edwards, CO 8132
(970) 766-1470
fax: (970) 766-1471
email: tab@vail.net
www.tabassociates.com
Civil Engineer:
Alpine Engineering
970-926-3373
Structural Engineer:
Jirsa-Hedrick
303-839-1963
Mechanical Engineer:
BG BuildingWorks
970-949-6108
Electrical Engineer:
BG BuildingWorks
970-949-6108

Seal

MARK WILCOX
204
Registered
Original Date of Licensure
STATE OF COLORADO
PROFESSIONAL
LANDSCAPE ARCHITECT
04.13.2020

**Strawberry Park Elementary School**
**39620 Amethyst Drive**
**Steamboat Springs, CO**

Revisions:

| No | Description | Date |
|---|---|---|
| | | |

Issue Dates:
01/13/20 - SD
02/20/20 - DD
03/30/20 - CD
04/06/20 - CD

Sheet Title:
**SITE DETAILS**

Project No:
1935.01

Sheet No:
L4.8

## LEGEND

- SOD
- NATIVE SEED
- HWM — DECIDUOUS TREE
- EVERGREEN SHRUBS
- DECIDUOUS SHRUBS
- ORNAMENTAL GRASSES

B REMOVAL OF THE EXISTING IRRIGATION SPRAY HEADS AND LATERAL LINES
CONTRACTOR SHALL LOCATE ALL OF THE EXISTING ROTOR SPRAY HEADS REMOVE AND RETURN TO THE SCHOOL'S STAFF. IF EXISTING PIPING AND WIRES ARE EXPOSED DURING DEMO, THE CONTRACTOR SHALL REMOVE ANY EXPOSED PVC MAINLINE / WIRES AND WILL BE RESPONSIBLE TO DISPOSED OF THEM.

RCRBD Record Set
T.A.
05/14/2020


TAB Associates
The Architectural Balance
0056 Edwards Village Blvd.
Suite 210
Edwards, CO 81132
(970) 766-1470
fax: (970) 766-1471
email: tab@vail.net
www.tabassociates.com
Civil Engineer
Alpine Engineering
970-926-3373
Structural Engineer
Jirsa-Hedrick
303-839-1963
Mechanical Engineer
BG BuildingWorks
970-949-6108
Electrical Engineer
BG BuildingWorks
970-949-6108


Seal

# Strawberry Park Elementary School
## 39620 Amethyst Drive
Steamboat Springs, CO

Revisions:

| No | Description | Date |
|---|---|---|

Issue Dates:
01/13/20-SD
02/20/20-DD
04/06/20 - CD

Sheet Title:
IRRIGATION PLAN

Project No:
1935.01

Sheet No:
IR1.0

REFER TO SHEET

| | |
|---|---|
| IR1.0 | IRRIGATION PLANS |
| IR1.1 | IRRIGATION NOTES |
| IR1.1 | IRRIGATION SCHEDULE |
| IR1.1 | IRRIGATION DETAILS |

811 Know what's below. Call before you dig.
CALL 3 BUSINESS DAYS IN ADVANCE BEFORE YOU DIG, GRADE, OR EXCAVATE FOR THE MARKING OF UNDERGROUND MEMBER UTILITIES.


KDI HydroSystems
Irrigation Consulting & Water Management
860 Tabor Street, Suite 200 Lakewood, Colorado 80401
o: 303.980.5327 www.hydrosystemskdi.com


1 IR1.0 IRRIGATION PLAN
1" = 20' - 0"

0 5 10 20 40
SCALE: 1"=20'-0"


DHM DESIGN
900 S. Broadway
Suite 300
Denver, CO 80209
303.892.5566
www.dhmdesign.com

# IRRIGATION SCHEDULE

| SYMBOL | MANUFACTURER | MODEL NO. | DESCRIPTION | DETAIL NO. |
|---|---|---|---|---|
| | HUNTER | PROS-06-CV-PRS30 WITH PRO-SPRAY NOZZLE | POPUP SPRAY HEAD | 1 |
| | HUNTER | PROS-06-CV-PRS30 WITH PRO-SPRAY SST, CORNER NOZZLE | POPUP SPRAY HEAD | 1 |
| | HUNTER | ICV-FS | ELECTRIC CONTROL VALVE | 2 |
| | | CLASS 200 BE - 2½" & SMALLER | PVC MAINLINE | 3 |
| | | CLASS 200 RT - 3" & LARGER | PVC MAINLINE | 3 |
| | | CLASS 200 BE | PVC LATERAL | 3 |
| | | CLASS 160 | PVC SLEEVING | N/S |
| | TORO | BLUE STRIPE | POLY DRIP TUBING -¾" MIN. WIDTH | 5 |
| N/S | RAIN BIRD | XERI-BUG | DRIP EMITTERS | 5 |
| | | | DRIP LINE BLOW-OUT STUB | 6 |
| N/S | | | WIRE SPLICES | 4 |
| | | | | |
| | | | EXISTING CONTROL VALVE | |
| | | | EXISTING DRIP VALVE | |
| | | | EXISTING MAINLINE | |
| | | | EXISTING LATERAL LINE | |
| | | | EXISTING SLEEVING | |
| | | | EXISTING DRIP VALVE | |
| | | | | |

GPM — CONTROLLER & STATION NO. / CONTROL VALVE SIZE

3 A (controller) — NUMBER OF SPARE WIRES - 2 CONTROL AND 1 SPARE WIRES TO WHICH CONTROLLER - SEE CONSTRUCTION NOTES

# IRRIGATION CONSTRUCTION NOTES

1. DRAWINGS AND BASE INFORMATION - ALL BASE AND PLANTING INFORMATION HAVE BEEN PROVIDED BY DHM DESIGN. THE CONTRACTOR IS RESPONSIBLE TO NOTIFY HYDROSYSTEMS*KDI OF ANY DISCREPANCIES BETWEEN THE UTILITY OR PLANTING PLANS AND THE IRRIGATION PLAN. IF CONTRACTOR FAILS TO NOTIFY HYDROSYSTEMS*KDI AND MAKES CHANGES TO THE IRRIGATION SYSTEM DESIGN, HE ASSUMES ALL COSTS AND LIABILITIES ASSOCIATED WITH THOSE FIELD CHANGES. REFER TO SPECIFICATIONS FOR ADDITIONAL PROJECT REQUIREMENTS. CONTACT IRRIGATION CONSULTANT FOR CURRENT SPECIFICATIONS IF NOT PROVIDED.

2. SYSTEM PRESSURE - HYDROSYSTEMS*KDI HAS CONTACTED THE LOCAL WATER DISTRICT THAT SERVES THIS SITE AND THEY HAVE BEEN TOLD THAT THE STATIC WATER PRESSURE IN THIS AREA SHOULD BE **70** PSI. THE CONTRACTOR IS RESPONSIBLE TO FIELD VERIFY PRESSURE PRIOR TO COMMENCING ANY CONSTRUCTION AND NOTIFY HYDROSYSTEMS*KDI OF ANY VARIANCE FROM THE STATED PRESSURE IMMEDIATELY. WRITTEN DOCUMENTATION OF PRESSURE TEST AND RESULTS SHALL BE PROVIDED TO HYDROSYSTEMS*KDI AT CONSTRUCTION ONSET. IF CONTRACTOR FAILS TO FIELD VERIFY PRESSURE AND/OR NOTIFY HYDROSYSTEMS*KDI OR ANY VARIATIONS FROM THIS PRESSURE, THEN HE ASSUMES ALL CONSTRUCTION AND ENGINEERING COSTS ASSOCIATED WITH SYSTEM MODIFICATIONS REQUIRED TO ACCOMMODATE ACTUAL SITE PRESSURE. THIS SYSTEM HAS BEEN DESIGNED FOR A REQUIRED STATIC PRESSURE OF **70** PSI MINIMUM.

3. IRRIGATION SYSTEM OPERATION INTENT - THIS IRRIGATION SYSTEM HAS BEEN DESIGNED TO IRRIGATE THE ESTABLISHED LANDSCAPE WITHIN A SIX NIGHT PER WEEK, SIX HOUR PER NIGHT WATERING WINDOW. ESTABLISHMENT WATERING WILL REQUIRE UP TO TWICE AS MUCH IRRIGATION FOR A FOUR TO SIX WEEK PERIOD. THE DESIGN IS BASED ON THE FOLLOWING PROJECTED WEEKLY APPLICATION RATES AFTER ESTABLISHMENT. THESE FIGURES ARE BASED ON A 30-YEAR AVERAGE WEATHER DATA AND WILL NEED TO BE ADJUSTED DUE TO SEASONAL CHANGES AND WEATHER CONDITIONS ABOVE AND BELOW THE AVERAGE VALUES UTILIZED.

| | |
|---|---|
| BLUEGRASS TURF | 2.00" PER WEEK PEAK SEASON |
| ORNAMENTAL PLANTINGS | 0.89" PER WEEK PEAK SEASON |

4. EQUIPMENT INSTALLATION - IT IS THE INTENT OF THIS DESIGN THAT ALL IRRIGATION EQUIPMENT BE INSTALLED WITHIN PROPERTY LIMITS AND WITHIN LANDSCAPED AREAS. ANY EQUIPMENT OTHER THAN VALVE BOXES OR SLEEVING THAT CONTAINS PIPE OR WIRES SHOWN OUTSIDE OF THESE LIMITS IS SHOWN IN THAT LOCATION FOR GRAPHICAL CLARITY ONLY. ALL VALVE BOXES SHALL BE INSTALLED A MINIMUM OF 2'-0" FROM EDGE OF ANY PAVED SURFACES UNLESS SPECIFICALLY INDICATED ON PLANS. BOXES INSTALLED IN OPEN TURF AREAS SHALL BE KEPT TO EDGES AND STAKED FOR REVIEW IF ALONG HIGH TRAFFIC AREAS. ALL VALVE BOXES SHALL BE PLACED A MINIMUM OF 3'-0" FROM THE CENTERLINE OF ANY DRAINAGE SWALE. ALL VALVE BOXES WITHIN PAVEMENT SHALL BE TIER 15 RATED BOXES FOR HEAVY DUTY NON-DELIBERATE TRAFFIC. BOX LID COLOR SHALL MATCH ADJACENT MATERIALS, I.E. GREEN IN TURF, TAN IN WOOD MULCH, GRAY IN STONE MULCH, PURPLE FOR RECLAIMED WATER SYSTEMS (IF REQUIRED). REFER TO LANDSCAPE PLANS FOR MATERIAL COLORS AND TYPES. ALL BOXES SHALL BE INSTALLED TO BE FLUSH WITH GRADE AND IN AN ORDERLY MANNER.

5. MANUAL DRAIN VALVES - CONTRACTOR TO INSTALL ONE MANUAL DRAIN VALVE ON PRESSURE SUPPLY LINE DIRECTLY DOWNSTREAM OF BACKFLOW PREVENTER AND AT ALL LOW POINTS AND DEAD ENDS OF PRESSURE SUPPLY PIPING TO ENSURE COMPLETE DRAINAGE OF SYSTEM. CONTRACTOR SHALL BE RESPONSIBLE FOR DETERMINING THESE LOCATIONS IN-FIELD AND INSTALLATION LOCATIONS SHALL BE NOTED ON AS-BUILTS.

6. POP-UP SPRAY NOZZLES - CONTRACTOR TO INSTALL PLASTIC NOZZLES ON ALL POP-UP SPRAY HEADS. INSTALL 15 SERIES NOZZLES ON ALL HEADS SPACED AT 12' TO 14'. INSTALL 12 SERIES NOZZLES ON ALL HEADS SPACED 10' TO 11'. INSTALL 10 SERIES NOZZLES ON ALL HEADS SPACED AT 8' TO 9'. INSTALL 8 SERIES NOZZLES ON ALL HEADS SPACED AT 6' TO 7'. INSTALL 5' NOZZLES ON ALL HEADS SPACED AT 5'. INSTALL SIDE STRIP NOZZLES ON ALL HEADS WITH AN "S" DESIGNATION AND RIGHT AND LEFT CORNER STRIP NOZZLES ON ALL HEADS WITH AN "L" OR "R" DESIGNATION. VARIABLE ARC NOZZLES SHOULD BE UTILIZED ADJACENT TO CURVILINEAR SHRUB BEDS OR FOR ANY ANGLES THAT ARE NOT A STANDARD NOZZLE ANGLE.

7. UNLABELED PIPING - ALL UNLABELED LATERAL PIPING SHALL BE 1" MINIMUM UNLESS OTHERWISE NOTED.

8. SLEEVING - ALL SLEEVING UNDER PAVED SURFACES SHOWN ON PLANS IS BY CONTRACTOR UNLESS OTHERWISE NOTED. SLEEVING SHALL BE INSTALLED IN THE SIZES AND QUANTITIES SHOWN ON PLANS OR BASED ON THE SCHEDULE BELOW. WHERE SLEEVES ARE SHOWN, BUT NOT LABELED, FOLLOW THE SCHEDULE BELOW. ALL MAINLINE, CONTROL WIRES AND DRIP LINES UNDER PAVED SURFACES ARE TO BE INSTALLED IN SLEEVING. ALL MAINLINE SLEEVE LOCATIONS TO INCLUDE A SEPARATE WIRE SLEEVE.

| SLEEVED PIPE SIZE/WIRE QUANTITY | REQUIRED SLEEVE SIZE & (QUANTITY) |
|---|---|
| ¾" - 1¼" PIPING | 2" PVC (1) |
| 1½" - 2" PIPING | 4" PVC (1) |
| 2½" - 3" PIPING | 6" PVC (1) |
| 1-25 CONTROL WIRES | 2" PVC (1) |

9. ADJUSTMENT - CONTRACTOR SHALL FINE TUNE/ADJUST THE IRRIGATION SYSTEM TO REDUCE/AVOID OVERSPRAY ONTO HARD SURFACES BY ADJUSTING NOZZLE DIRECTION AND NOZZLE RADIUS.

10. PLANS AND SPECIFICATIONS - CONTRACTOR RESPONSIBLE TO ENSURE WORK CONFORMS TO PLANS AND SPECIFICATIONS. AT ONSET OF CONSTRUCTION, VERIFY PLANS ARE CURRENT. WHERE REQUIRED BY CITY, CONTRACTOR SHALL CONSTRUCT ONLY OFF CITY STAMPED PLANS. REVISIONS TO CITY STAMPED PLANS SHALL CONFORM TO CITY FIELD CHANGE PROCEDURES AND DOCUMENTATION.

11. EXISTING IRRIGATION DAMAGE - CONTRACTOR SHALL REPAIR OR REPLACE ANY EXISTING IRRIGATION SYSTEMS DAMAGED DURING NEW INSTALLATION. REPAIR OR REPLACEMENT SHALL BE DETERMINED BY OWNER OR OWNER'S REPRESENTATIVE AND PAID FOR BY THE LANDSCAPE CONTRACTOR.

12. EXISTING IRRIGATION COORDINATION - EXISTING IRRIGATION SYSTEM SHALL NOT BE TURNED OFF FOR MORE THAN 24 HOURS MAXIMUM. CONTRACTOR SHALL COORDINATE TURN OFF OF SYSTEM WITH OWNER OR MAINTENANCE STAFF 72 HOURS PRIOR TO ANY NEW CONSTRUCTION.

19. IRRIGATION DETAILS AND SPECIFICATIONS - HYDROSYSTEMS-KDI WILL BE RESPONSIBLE FOR THE IRRIGATION DESIGN ITSELF. DETAILS COMPLY AND ARE STANDARD OF ADAMS 12 SCHOOL DISTRICT. THE IRRIGATION SPECIFICATIONS THAT WILL BE SUBMITTED TO THE CONTRACTOR IN CONJUNCTION WITH THIS DESIGN ARE PROPERTY OF ADAMS 12 SCHOOL DISTRICT. HYDROSYSTEMS-KDI SHALL NOT RESPONSIBLE FOR ANY OF THE INFORMATION IN THE IRRIGATION SPECIFICATIONS.

## REFER TO SHEET

| | |
|---|---|
| IR1.0 | IRRIGATION PLANS |
| IR1.1 | IRRIGATION NOTES |
| IR1.1 | IRRIGATION SCHEDULE |
| IR1.1 | IRRIGATION DETAILS |

Know what's below.
Call before you dig.
CALL 3 BUSINESS DAYS IN ADVANCE BEFORE YOU DIG, GRADE, OR EXCAVATE FOR THE MARKING OF UNDERGROUND MEMBER UTILITIES.

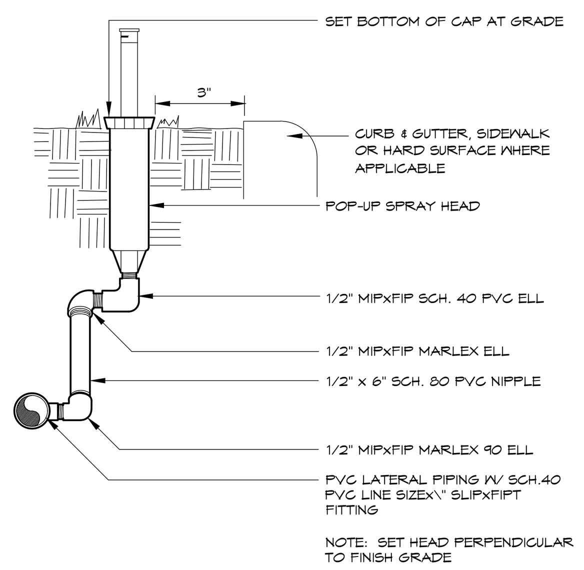


## POP SPRAY HEAD — 1

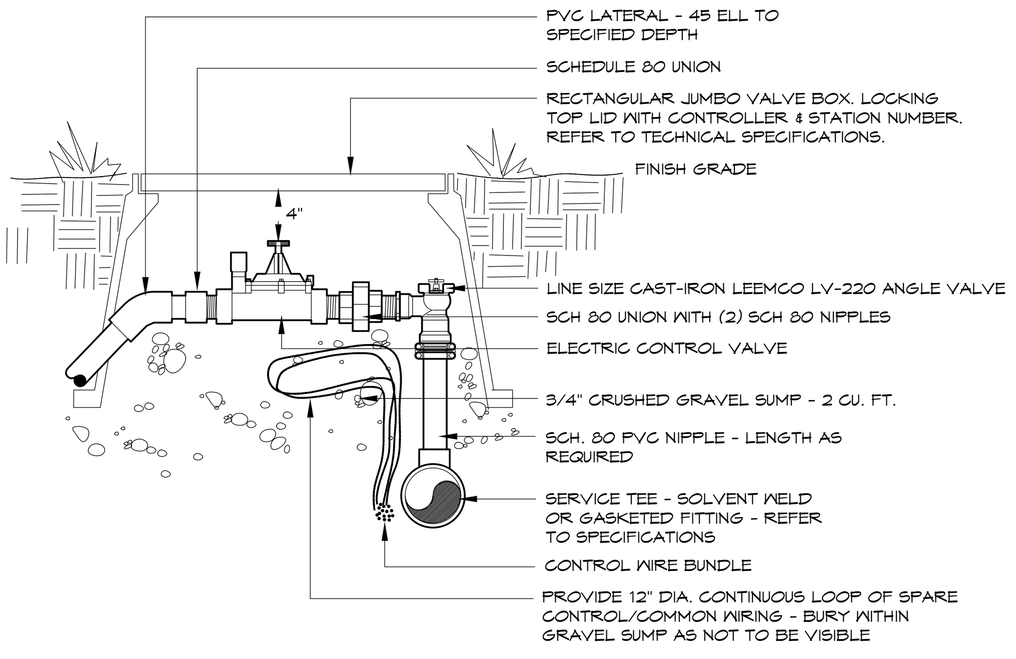


NOTE: DIAMETERS OF BALL VALVES, PVC FITTINGS AND NIPPLES SHALL EQUAL ELECTRIC CONTROL VALVE DIAMETER

VALVE BOXES SHALL BE INSTALLED PARALLEL OR PERPENDICULAR TO ADJACENT SIDEWALKS AND HARD SURFACES WHERE APPLICABLE

## ELECTRIC CONTROL VALVE — 2

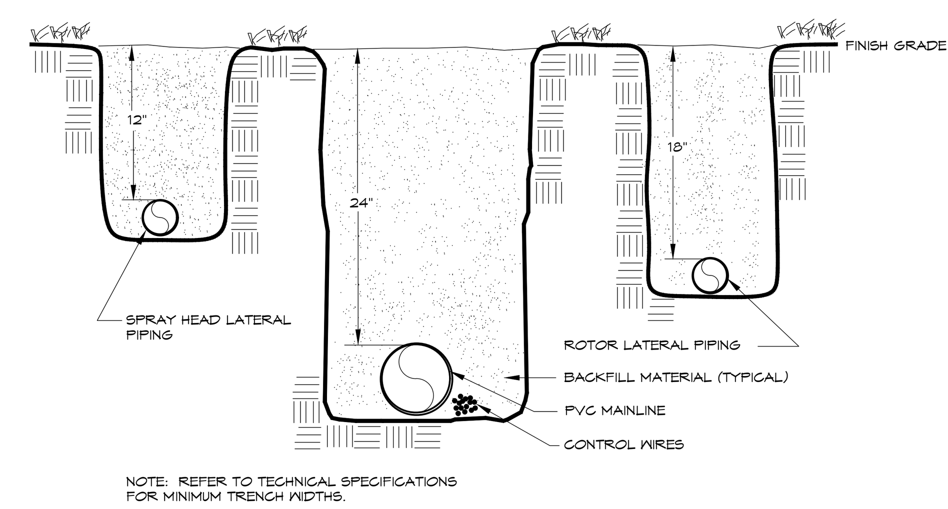


NOTE: REFER TO TECHNICAL SPECIFICATIONS FOR MINIMUM TRENCH WIDTHS.

## TRENCH — 3

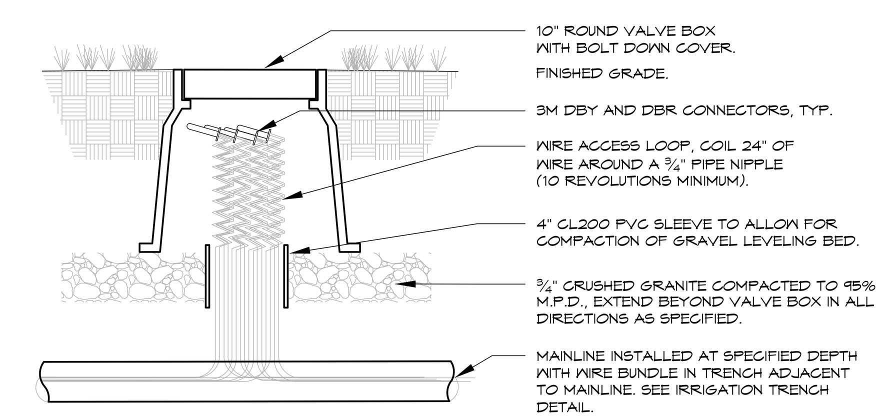


NOTE:
1. SET TOP OF BOX LEVEL WITH FINISHED GRADE IN TURF AREAS AND LEVEL WITH TOP OF MULCH IN SHRUB BEDS.
2. USE STANDARD RECTANGULAR VALVE BOX WITH BOLT DOWN LID FOR SPLICES OF MORE THAN TWENTY (20) WIRES.

## WIRE SPLICE BOX — 4

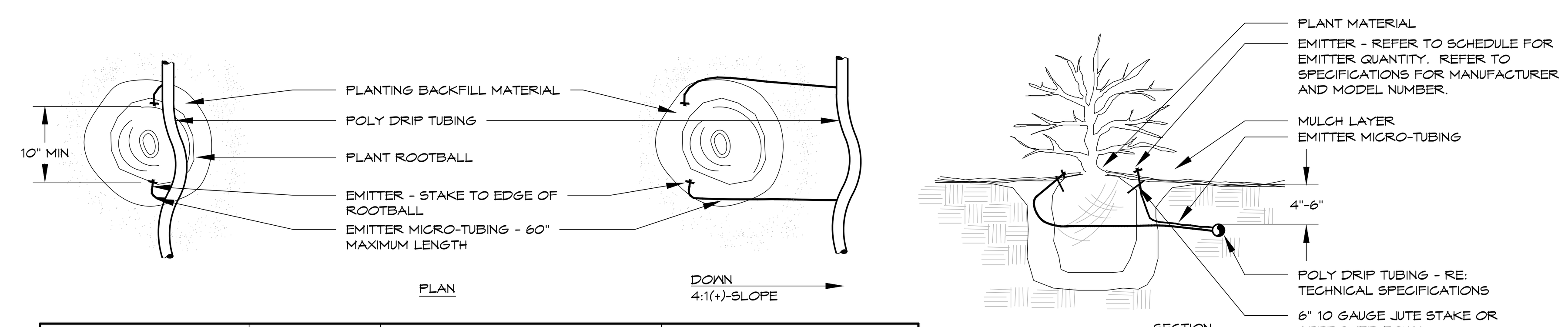


| PLANT SIZE | EMITTER FLOW RATE | EMITTER QTY. AT MULCHED BED LOCATIONS | EMITTER QTY. AT NATIVE SEED LOCATIONS |
|---|---|---|---|
| 1 - 2 GALLON MATERIAL | 0.5 GPH | ONE EACH | ONE EACH |
| 5 GALLON MATERIAL | 0.5 GPH | TWO EACH | TWO EACH |
| 1½" CALIPER TREE | 1.0 GPH | THREE EACH | FOUR EACH |
| 2" CALIPER TREE | 1.0 GPH | FOUR EACH | SIX EACH |
| 2½" CALIPER TREE | 1.0 GPH | SIX EACH | EIGHT EACH |
| 3" CALIPER TREE | 1.0 GPH | EIGHT EACH | TEN EACH |
| 3½" CALIPER TREE | 1.0 GPH | NINE EACH | ELEVEN EACH |
| 4" CALIPER TREE | 1.0 GPH | TEN EACH | TWELVE EACH |
| 6 FT. CONIFEROUS TREE | 1.0 GPH | FOUR EACH | SIX EACH |
| 8 FT. CONIFEROUS TREE | 1.0 GPH | SIX EACH | NINE EACH |
| 10 FT. CONIFEROUS TREE | 1.0 GPH | EIGHT EACH | TWELVE EACH |
| 12 FT. CONIFEROUS TREE | 1.0 GPH | TEN EACH | FOURTEEN EACH |

NOTES:
- INSTALL EMITTERS ON OPPOSING SIDES OF ROOTBALL. THREE OR MORE EMITTERS SHALL BE EQUALLY SPACED AROUND ROOT BALL.
- EMITTERS ARE TO BE INSTALLED TO CLEAR SURFACE BY A MINIMUM OF 1" AND A MAXIMUM OF 2".
- FLUSH ALL LINES THOROUGHLY, INCLUDING EMITTER MICRO-TUBING PRIOR TO EMITTER INSTALLATION.
- IF PLANTING ON A 4:1 SLOPE OR STEEPER, INSTALL BOTH EMITTERS ON UPHILL SIDE OF ROOT BALL.
- EMITTERS SHALL BE SELF-FLUSHING, PRESSURE COMPENSATING-TYPE UNLESS NOTED OTHERWISE WITHIN TECHNICAL SPECIFICATIONS.
- DRIP VALVE ZONES ARE DESIGNED TO ACCOUNT FOR DIFFERENCES IN PLANT REQUIREMENTS (HYDROZONES) AND SUN EXPOSURE.
- CONTRACTOR SHALL ENSURE HYDROZONES ARE VALVED SEPARATELY AS SHOWN ON PLAN.
- SITE CONDITIONS MAY DICTATE THAT MULTIPLE SUN EXPOSURES ARE VALVED TOGETHER DURING THE DESIGN PROCESS. CONTRACTOR SHALL ADJUST EMITTER SCHEDULE AS FOLLOWS:
  - EMITTER QUANTITIES SHALL REMAIN THE SAME BUT EMITTER GALLONAGES SHALL BE DOUBLED FOR PLANTS WITH SOUTH AND WEST EXPOSURES.
  - EMITTER QUANTITIES AND GALLONAGE SHALL BE AS SHOWN IN SCHEDULE FOR PLANTS WITH NORTH AND EAST EXPOSURES.
  - PLANTINGS WITH NORTH AND EAST EXPOSURE SHALL DICTATE VALVE RUN-TIMES AND CONTRACTOR SHALL ADJUST SCHEDULING ACCORDINGLY.

## DRIP EMITTER — 5

BELOW GRADE

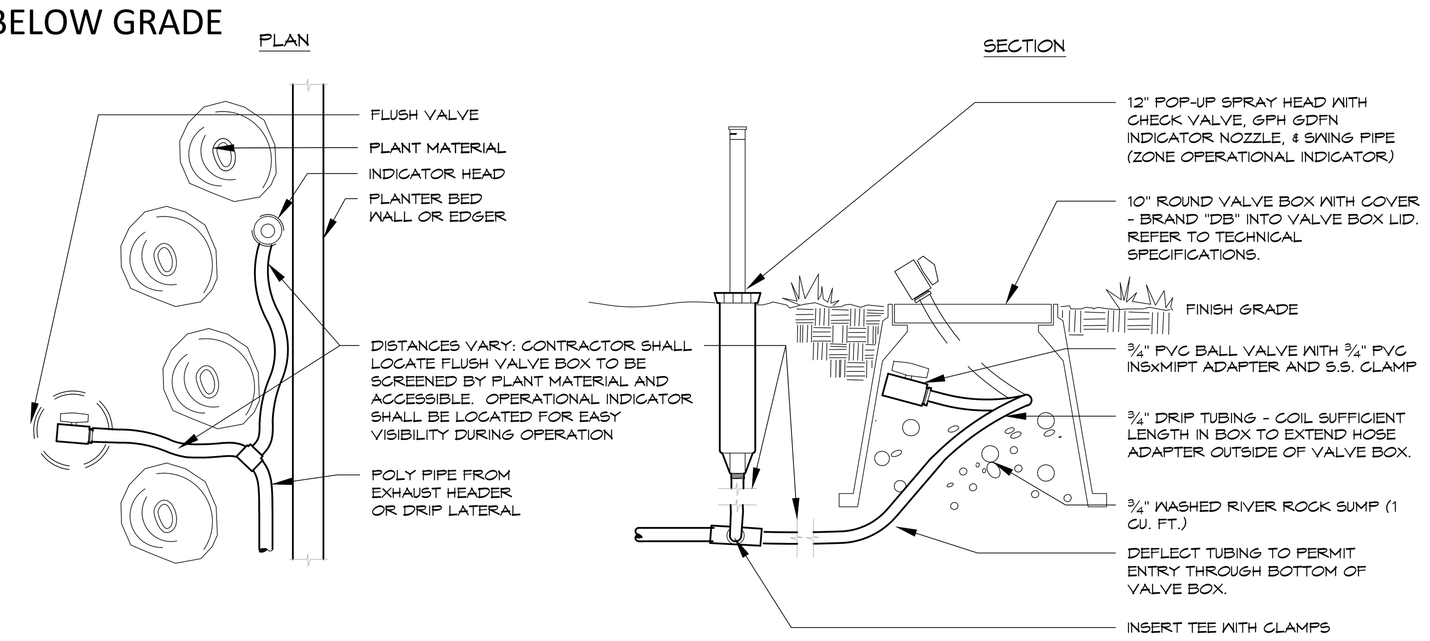


## DRIP FLUSH VALVE — 6

WITH OPERATIONAL INDICATOR

RCRBD Record Set
T.A.
05/14/2020


TAB Associates
The Architectural Balance
0056 Edwards Village Blvd. Suite 210
Edwards, CO 8132
(970) 766-1470
fax: (970) 766-1471
email: tab@vail.net
www.tabassociates.com
Civil Engineer: Alpine Engineering 970-926-3373
Structural Engineer: Jirsa-Hedrick 303-839-1963
Mechanical Engineer: BG BuildingWorks 970-949-6108
Electrical Engineer: BG BuildingWorks 970-949-6108


Seal

**Strawberry Park Elementary School**
**39620 Amethyst Drive**
**Steamboat Springs, CO**

Revisions:

| No | Description | Date |
|---|---|---|
| | | |

Issue Dates:
01/13/20-SD
02/20/20-DD
04/06/20 - CD

Sheet Title:
**IRRIGATION NOTES, SCHEDULE AND DETAILS**


HydroSystems KDI
Irrigation Consulting & Water Management
860 Tabor Street, Suite 200 Lakewood, Colorado 80401
o: 303.980.5327 www.hydrosystemskdi.com

DHM DESIGN
900 S. Broadway
Suite 300
Denver, CO 80209
303.892.5566
www.dhmdesign.com


Project No: 1935.01

Sheet No: IR1.1

RCRBD Record Set
T.A.

05/14/2020

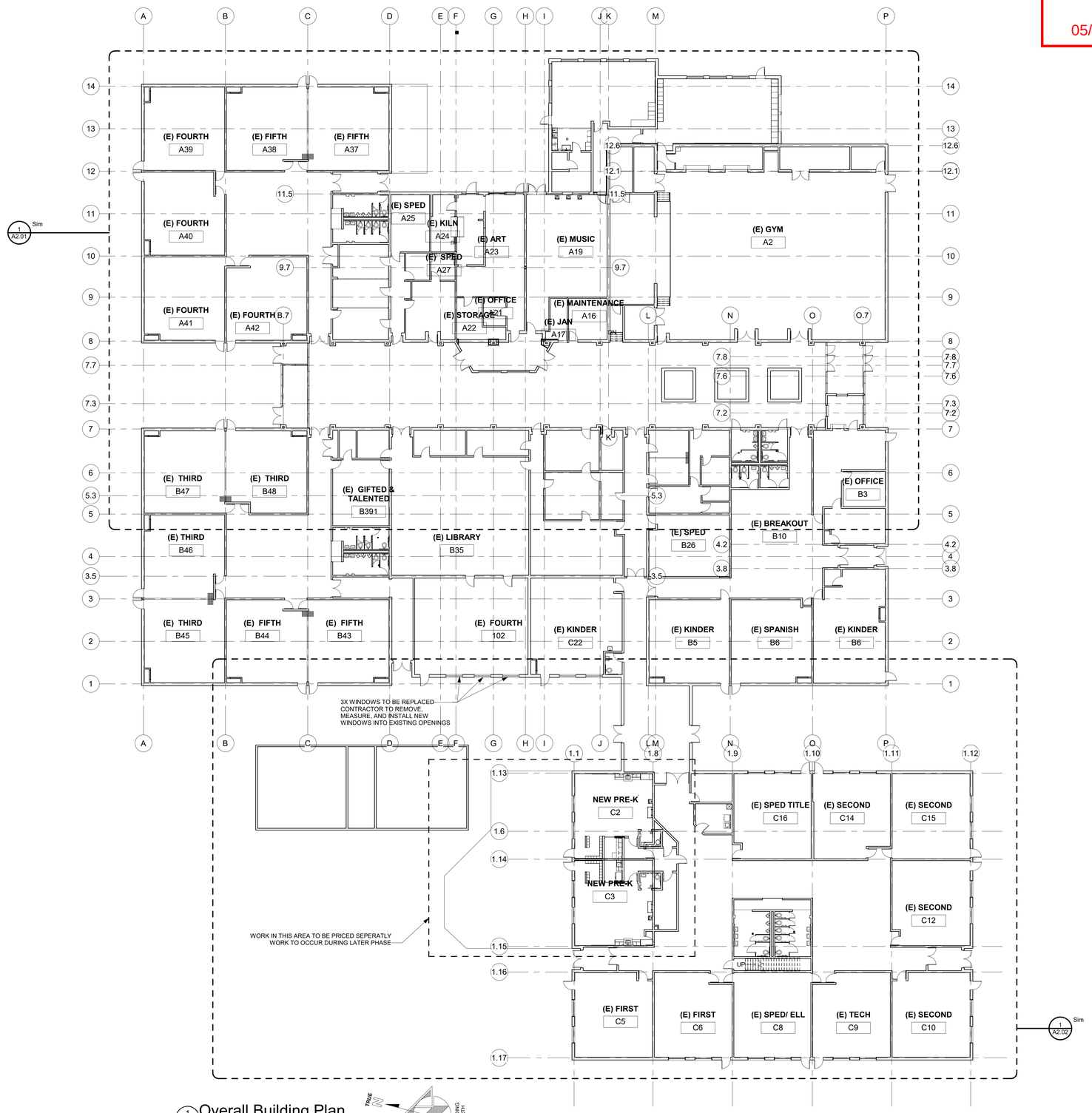


1 A2.00 Overall Building Plan
1/16" = 1'-0"


TAB Associates
*The Architectural Balance*
0056 Edwards Village Blvd.
Suite 210
Edwards, CO 81132
(970) 766-1470
fax: (970) 766-1471
email: tab@vail.net
www.tabassociates.com

Civil Engineer
Alpine Engineering, Inc.
970-926-3373
Structural Engineer
JH Structural Engineers
303-318-6539
Mechanical Engineer
BG BuildingWorks, Inc.
970-949-6108
Electrical Engineer
BG BuildingWorks, Inc.
970-949-6108


Seal

# Strawberry Park Elementary
## 39620 Amethyst Drive
### Steamboat Springs, CO

Revisions:

| No | Description | Date |
|---|---|---|

Issue Dates:
Concept - 11/19/2019
SD's - 1/13/20
DD's - 2/20/20
95% - 03/30/20
CDs - 04/06/20

Sheet Title:
**Overall Building Plan**

Project No:
1935.02

Sheet No:
A2.00

1 A2.01 LEVEL 1 - EXISTING PLAN CLASSROOMS
1/8" = 1'-0"

RCRBD Record Set
T.A.
05/14/2020

TAB Associates
The Architectural Balance
0056 Edwards Village Blvd.
Suite 210
Edwards, CO 81132
(970) 766-1470
fax: (970) 766-1471
email: tab@vail.net
www.tabassociates.com

Civil Engineer
Alpine Engineering, Inc.
970-926-3373
Structural Engineer
JH Structural Engineers
303-318-6539
Mechanical Engineer
BG BuildingWorks, Inc.
970-949-6108
Electrical Engineer
BG BuildingWorks, Inc.
970-949-6108

Seal
STATE OF COLORADO
GREGORY S. MACK
305837
LICENSED ARCHITECT
04/06/20

# Strawberry Park Elementary
## 39620 Amethyst Drive
Steamboat Springs, CO

Revisions:

| No | Description | Date |
|---|---|---|

Issue Dates:
Concept - 11/19/2019
SD's - 1/13/20
DD's - 2/20/20
95% - 03/30/20
CDs - 04/06/20

Sheet Title:
**Existing Building Floor Area A**

Project No:
1935.02

Sheet No:
A2.01

RCRBD Record Set
T.A.

05/14/2020

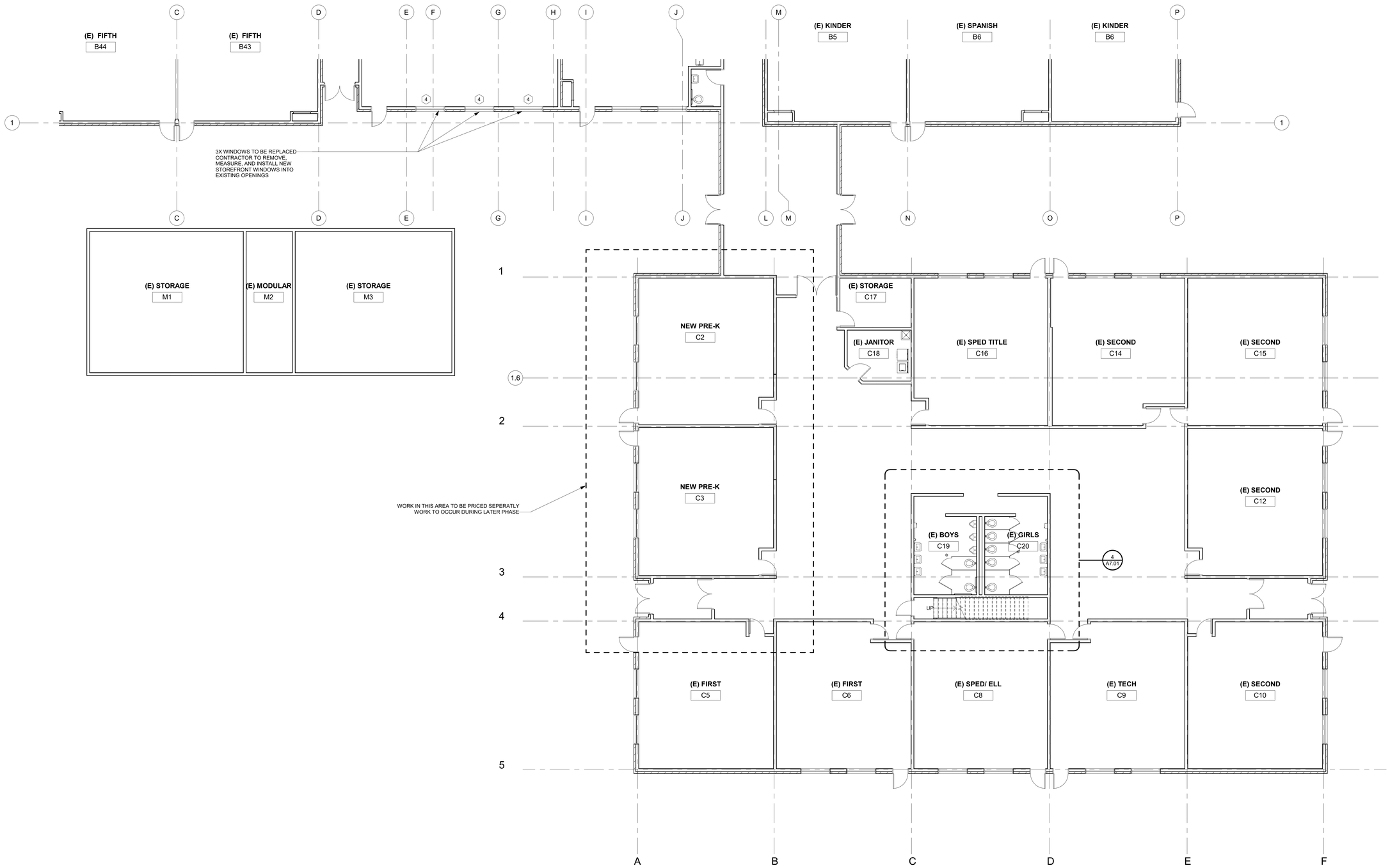


1 A2.02 LEVEL 1 - EXISTING PLAN - PRE-K
1/8" = 1'-0"


TAB Associates
The Architectural Balance
0056 Edwards Village Blvd.
Suite 210
Edwards, CO 8132
(970) 766-1470
fax: (970) 766-1471
email: tab@vail.net
www.tabassociates.com

Civil Engineer
Alpine Engineering, Inc.
970-926-3373
Structural Engineer
JH Structural Engineers
303-318-6539
Mechanical Engineer
BG BuildingWorks, Inc.
970-949-6108
Electrical Engineer
BG BuildingWorks, Inc.
970-949-6108


Seal

# Strawberry Park Elementary
## 39620 Amethyst Drive
Steamboat Springs, CO

Revisions:

| No | Description | Date |
|---|---|---|

Issue Dates:
Concept - 11/19/2019
SD's - 1/13/20
DD's - 2/20/20
95% - 03/30/20
CDs - 04/06/20

Sheet Title:
**Existing Building Floor Area B**

Project No:
1935.02

Sheet No:
A2.02

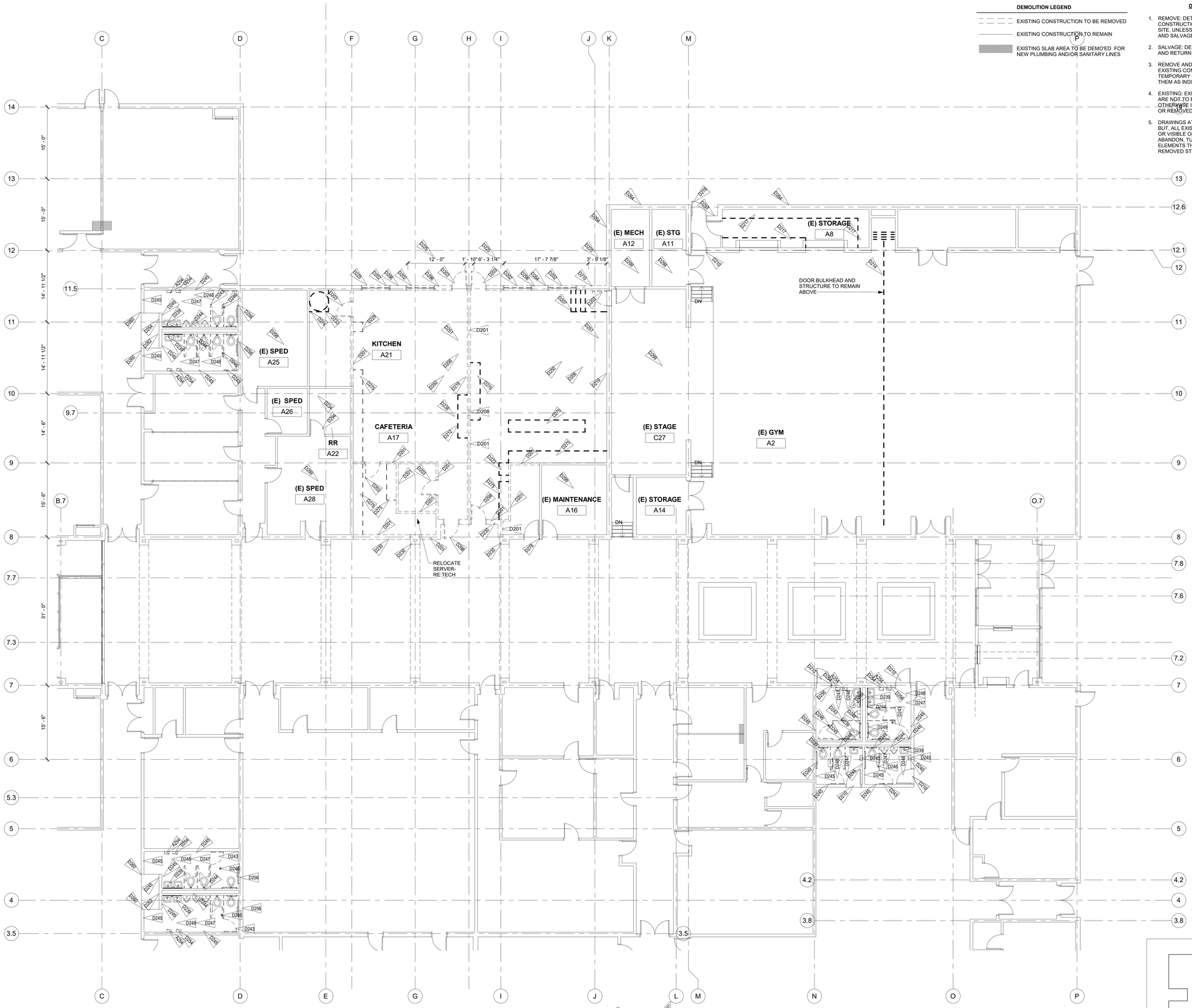


1 DEMO PLAN AREA A
D2.01 1/8" = 1'-0"

**DEMOLITION LEGEND**

- EXISTING CONSTRUCTION TO BE REMOVED
- EXISTING CONSTRUCTION TO REMAIN
- EXISTING SLAB AREA TO BE DEMO'ED FOR NEW PLUMBING AND/OR SANITARY LINES

**DEMOLITION DEFINITIONS:**

1. REMOVE: DETACH ITEMS FROM EXISTING CONSTRUCTION AND LEGALLY DISPOSE OF THEM OFF SITE, UNLESS OTHERWISE INDICATED TO BE REMOVED AND SALVAGED OR REMOVED AND REINSTALLED.
2. SALVAGE: DETACH ITEMS FROM EXISTING CONDITIONS AND RETURN TO OWNER READY FOR REUSE.
3. REMOVE AND REINSTALL: DETACH ITEMS FROM EXISTING CONDITIONS, PREPARE THEM FOR REUSE, TEMPORARY STORE AS REQUIRED AND REINSTALL THEM AS INDICATED.
4. EXISTING: EXISTING ITEMS OF CONSTRUCTION THAT ARE NOT TO BE REMOVED AND THAT ARE NOT OTHERWISE INDICATED TO BE REMOVED, SALVAGED, OR REMOVED AND REINSTALLED.
5. DRAWINGS ATTEMPT TO SHOW EXISTING CONDITIONS. BUT, ALL EXISTING CONDITIONS MAY NOT BE SHOWN OR VISIBLE ON SITE. CARE MUST BE TAKEN TO ABANDON, TURNOFF OR OTHERWISE SECURE EXISTING ELEMENTS THAT NEED TO BE REMOVED WITH REMOVED STRUCTURE.

## NOTES:

**GENERAL DEMOLITION NOTES:**

PCRPBD Record Set
T.A
DELIVERABLES AND COORDINATED WITH OWNER'S REPRESENTATION.

1. DEMOLITION NOTES ARE ON THE DEMOLITION SHEETS.
2. COORDINATE DEMOLITION AND PHASING EFFORTS WITH ARCHITECT AND OWNER'S REPRESENTATIVES. EVERY EFFORT SHALL BE MADE TO MINIMIZE DISRUPTION OF OWNER'S OPERATIONS AND TO PROVIDE BUILDING SECURITY. EXCESSIVE NOISE AND VIBRATION SHALL BE AVOIDED AND
3. VERIFY EXISTING CONDITIONS, DIMENSIONS, AND ELEVATIONS AND NOTIFY ARCHITECT OF DISCREPANCIES.
4. ITEMS NOT SHOWN DASHED ARE TO REMAIN UNLESS NOTED OTHERWISE. ALL DASHED ITEMS REPRESENT ITEMS TO BE REMOVED. COORDINATE REMOVAL WITH NEW ITEMS SHOWN IN DRAWINGS.
5. REMOVE EXISTING WALLS, DOORS, MILLWORK, PLUMBING FIXTURES, CEILINGS, SOFFITS, MARKERBOARDS, ETC. IN THEIR ENTIRETY AND AS REQUIRED TO EXECUTE DEMOLITION AND CONSTRUCTION WORK AS DESCRIBED ON THE DRAWINGS.
6. THE OWNER SHALL RESERVE THE RIGHT TO SALVAGE ANY MATERIALS.
7. PROVIDE PROTECTIONS FOR EXISTING BUILDING MATERIALS AND EQUIPMENT FROM DAMAGE DUE TO DEMOLITION OR CONSTRUCTION-RELATED INCIDENT PREFORMED UNDER THIS CONTRACT.
8. REFER TO MEP AND STRUCTURAL DRAWINGS FOR ADDITIONAL ITEMS TO BE REMOVED, CAPPED OR ALTERED.
9. IF NEW CONSTRUCTION IS SHOWN ON OTHER DRAWINGS IT IS ASSUMED DEMOLITION IS REQUIRED IF EXISTING WALLS, FINISHES AND ETC. ARE CURRENTLY PRESENT.
10. CONTRACTOR TO COORDINATE REMOVAL OF EXISTING ITEMS WITH INSTALLATIONS OF NEW ITEMS.
11. COORDINATE NEW STRUCTURAL ITEMS WITH REMOVAL OF EXISTING ITEMS. REFER TO STRUCTURAL PLANS FOR ADDITIONAL STRUCTURAL WORK TO EXISTING STRUCTURE.
12. IT IS ASSUMED ITEMS NOT TAGGED AS REMOVED OR SALVAGED WILL BE REMOVED IF ATTACHED TO WALL, CABINET, OR OTHER ITEMS. THIS INCLUDES ITEMS ON WALLS, CEILINGS AND FLOORS.
13. ALL PLUMBING SHOWN AS DASHED AND NOT SPECIFICALLY NOTED WILL BE REMOVED. ALL PLUMBING NEEDS TO BE MODIFIED TO MATCH NEW LAYOUT. REFER TO PLUMBING PLANS FOR EXTENT OF WORK.
14. DRAWINGS ATTEMPT TO SHOW EXISTING CONDITIONS. BUT, ALL EXISTING CONDITIONS MAY NOT BE SHOWN OR VISIBLE ON SITE. CARE MUST BE TAKEN TO ABANDON, TURNOFF OR OTHERWISE SECURE EXISTING ELEMENTS THAT NEED TO BE REMOVED WITH REMOVED STRUCTURE. WHEN CONFLICTS ARE FOUND CONTACT ARCHITECT FOR DIRECTION.
15. REFER TO DEMO REFLECTED CEILING PLANS FOR ADDITIONAL WORK
16. SALVAGE AND STORE ALL EXISTING FURNISHINGS AND EQUIPMENT IN EXISTING SPACES NOTED FOR RENOVATION.
17. NOT ALL ITEMS TAGGED FOR CLARITY. ASSUME REMOVE IF DASHED.

KEYNOTE LEGEND

| KEY VALUE | KEYNOTE TEXT |
|---|---|
| A254 | INSTALL NEW WALL MOUNTED SHELVES, REF DTL 2/A7.00 |
| D201 | REMOVE EXISTING WALL |
| D202 | REMOVE EXISTING WINDOW, COORDINATE WITH STRUCT DRAWINGS |
| D203 | REMOVE EXISTING DOOR AND DOOR FRAME, COORDINATE WITH STRUCT DRAWINGS |
| D206 | REMOVE EXISTING FINISHES, INCLUDING BUT NOT LIMITED TO FLOOR FINISHES AND WALL COVERINGS, ETC |
| D207 | REMOVE EXISTING STAIR |
| D208 | EXISTING STRUCTURE TO REMAIN, REF STRUCTURE DWGS |
| D210 | EXISTING DOOR TO REMAIN. REFER TO HARDWARE SCHEDULE FOR REMOVAL OF HARDWARE AS NOTED |
| D212 | REMOVE EXISTING CASEWORK, OR PORTION OF |
| D214 | DEMO GYM PARTITION WALL, TRACKS AND SOFFIT TO REMAIN |
| D215 | REMOVE PORTION OF EXISTING WALL |
| D217 | REMOVE EXSITING KITCHEN EQUIPMENT, REF KITCHEN DWGS AND OWNER FOR REUSE |
| D219 | REMOVE WHITEBOARDS |
| D223 | DEMO EXISTING DRINKING FOUNTAIN |
| D225 | REMOVE PORTION OF EXISTING WALL FOR NEW OPENINGS |
| D229 | REMOVE EXISTING UTILITY SINK |
| D230 | EXISTING PILASTER AND COLUMNS REMAIN. REMOVE PORTIONS ON SIDES FOR NEW COLUMNS PER STRCUTURE |
| D233 | SALVAGE EXISTING KILN FOR REUSE |
| D234 | REMOVE FLOORING AND BASE |
| D238 | REFERENCE STRUCTURAL DRAWINGS FOR WALL AND SLAB DEMO DETAILS |
| D239 | EXISTING FIXTURES TO REMAIN. REMOVE AS NECESSARY FOR REMOVAL OF WALL FINISHES OR INSTALLATION OF NEW WALL FINISHES. REFER TO PLUMBING FOR REPLACEMENT OF FACUETS AND FLUSH VALVES |
| D240 | REMOVE EXISTING SURFACE MOUNTED ELECTRIC HANDDRYER, MAKE ELECTRICAL SAFE FOR REINSTALLATION OF NEW HAND DRYERS |
| D243 | REMOVE EXISTING TOILET PARTITIONS |
| D244 | REMOVE EXISTING TILE AND GYPSUM BACKER BOARD ON WALL |
| D245 | EXISTING DRYWALL TO REMAIN, PREP FOR NEW TILE |
| D246 | EXISTING FLOOR DRAIN TO REMAIN |
| D247 | REMOVE EXISTING TILE FLOOR |
| D248 | REMOVE MISC WALL MOUNTED ITEMS SUCH AS MIRRORS, SOAP DISPENSERS, HOOKS, SHELVES, ETC |
| D249 | SALVAGE EX GRAB BARS FOR REINSTALLATION |
| D250 | REMOVE CEILING FINISHES |
| D251 | SALVAGE EXISTING SMART PROJECTOR |
| D253 | SALVAGE KEYPAD |
| D254 | REMOVE EXISTING SEMI RECESSED ELECTRIC HANDDRYER, MAKE ELECTRICAL SAFE FOR REINSTALLATION OF NEW HAND DRYERS |
| D255 | REMOVE EX URINAL PARTITION |
| D256 | EX CMU WALL |
| D260 | REMOVE EXISTING CORNER GUARDS |
| D262 | EXISTING HOSE BIB |
| D264 | BRICK TO REMAIN, DEMO BRICK AS REQ PER STRUCT DWG |
| D274 | SALVAGE HOOD OVER KILN FOR REINSTALLATION OVER NEW KILN LOCATION |
| D275 | REMOVE EXISITNG CASEWORK |
| D278 | REMOVE DOOR & HARDWARE, FRAME TO REMAIN |
| D294 | REMOVE DOOR HANDLE SET, LEAVE DOOR IN PLACE, REF HARDWARE SCHEDULE FOR REPLACEMENT |
| D296 | SALVAGE BRICK SIDING FOR REINSTALLATION PATCHWORK |
| D298 | REMOVE DOOR AND FRAME. SALVAGE NDE LOCKSET RETURN TO OWNER REINSTALL SOME PER DOOR HARDWARE SCHEDULE |
| D299 | NO ARCHITECTURAL WORK IN EX. ROOM, RE: MEPT FOR ANY WORK |

KEY PLAN

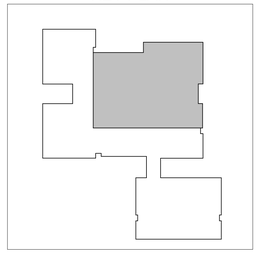

TAB Associates
*The Architectural Balance*
0056 Edwards Village Blvd.
Suite 210
Edwards, CO 81632
(970) 766-1470
fax: (970) 766-1471
email: tab@vail.net
www.tabassociates.com

Civil Engineer
Alpine Engineering, Inc.
970-926-3373
Structural Engineer
JH Structural Engineers
303-318-6539
Mechanical Engineer
BG BuildingWorks, Inc.
970-949-6108
Electrical Engineer
BG BuildingWorks, Inc.
970-949-6108

Seal

# Strawberry Park Elementary
## 39620 Amethyst Drive
Steamboat Springs, CO

Revisions:

| No | Description | Date |
|---|---|---|
| | | |

Issue Dates:
Concept - 11/19/2019
SD's - 1/13/20
DD's - 2/20/20
95% - 03/30/20
CDs - 04/06/20

Sheet Title:
**Demo Floor Area A**

Project No:
1935.02

Sheet No:
D2.01

1 D2.02 DEMO PLAN AREA B PRE-K

1/8" = 1'-0"

**DEMOLITION LEGEND**

- EXISTING CONSTRUCTION TO BE REMOVED
- EXISTING CONSTRUCTION TO REMAIN
- EXISTING SLAB AREA TO BE DEMO'ED FOR NEW PLUMBING AND/OR SANITARY LINES

KEY PLAN

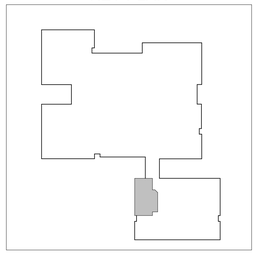

## NOTES:

RCRBD Record Set
T.A.
05/13/2020

**GENERAL DEMOLITION NOTES:**

1. DEMOLITION NOTES ARE ON THE DEMOLITION SHEETS.
2. COORDINATE DEMOLITION AND PHASING EFFORTS WITH ARCHITECT AND OWNER'S REPRESENTATIVES. EVERY EFFORT SHALL BE MADE TO MINIMIZE DISRUPTION OF OWNER'S OPERATIONS AND TO PROVIDE BUILDING USERS SAFE ACCESS. EXCESSIVE NOISE AND VIBRATION SHALL BE PRE-APPROVED AND COORDINATED WITH OWNER'S REPRESENTATION.
3. VERIFY EXISTING CONDITIONS, DIMENSIONS, AND ELEVATIONS AND NOTIFY ARCHITECT OF DISCREPANCIES.
4. ITEMS NOT SHOWN DASHED ARE TO REMAIN UNLESS NOTED OTHERWISE. ALL DASHED ITEMS REPRESENT ITEMS TO BE REMOVED. COORDINATE REMOVAL WITH NEW ITEMS SHOWN IN DRAWINGS.
5. REMOVE EXISTING WALLS, DOORS, MILLWORK, PLUMBING FIXTURES, CEILINGS, SOFFITS, MARKERBOARDS, ETC. IN THEIR ENTIRETY AND AS REQUIRED TO EXECUTE DEMOLITION AND CONSTRUCTION WORK AS DESCRIBED ON THE DRAWINGS.
6. THE OWNER SHALL RESERVE THE RIGHT TO SALVAGE ANY MATERIALS.
7. PROVIDE PROTECTIONS FOR EXISTING BUILDING MATERIALS AND EQUIPMENT FROM DAMAGE DUE TO DEMOLITION OR CONSTRUCTION-RELATED INCIDENT PREFORMED UNDER THIS CONTRACT.
8. REFER TO MEP AND STRUCTURAL DRAWINGS FOR ADDITIONAL ITEMS TO BE REMOVED, CAPPED OR ALTERED.
9. IF NEW CONSTRUCTION IS SHOWN ON OTHER DRAWINGS IT IS ASSUMED DEMOLITION IS REQUIRED IF EXISTING WALLS, FINISHES AND ETC. ARE CURRENTLY PRESENT.
10. CONTRACTOR TO COORDINATE REMOVAL OF EXISTING ITEMS WITH INSTALLATIONS OF NEW ITEMS.
11. COORDINATE NEW STRUCTURAL ITEMS WITH REMOVAL OF EXISTING ITEMS. REFER TO STRUCTURAL PLANS FOR ADDITIONAL STRUCTURAL WORK TO EXISTING STRUCTURE.
12. IT IS ASSUMED ITEMS NOT TAGGED AS REMOVED OR SALVAGED WILL BE REMOVED IF ATTACHED TO WALL, CABINET, OR OTHER ITEMS. THIS INCLUDES ITEMS ON WALLS, CEILINGS AND FLOORS.
13. ALL PLUMBING SHOWN AS DASHED AND NOT SPECIFICALLY NOTED WILL BE REMOVED. ALL PLUMBING NEEDS TO BE MODIFIED TO MATCH NEW LAYOUT. REFER TO PLUMBING PLANS FOR EXTENT OF WORK.
14. DRAWINGS ATTEMPT TO SHOW EXISTING CONDITIONS, BUT, ALL EXISTING CONDITIONS MAY NOT BE SHOWN OR VISIBLE ON SITE. CARE MUST BE TAKEN TO ABANDON, TURNOFF OR OTHERWISE SECURE EXISTING ELEMENTS THAT NEED TO BE REMOVED WITH REMOVED STRUCTURE. WHEN CONFLICTS ARE FOUND CONTACT ARCHITECT FOR DIRECTION.
15. REFER TO DEMO REFLECTED CEILING PLANS FOR ADDITIONAL WORK
16. SALVAGE AND STORE ALL EXISTING FURNISHINGS AND EQUIPMENT IN EXISTING SPACES NOTED FOR RENOVATION.
17. NOT ALL ITEMS TAGGED FOR CLARITY. ASSUME REMOVE IF DASHED.

**DEMOLITION DEFINITIONS:**

1. REMOVE: DETACH ITEMS FROM EXISTING CONSTRUCTION AND LEGALLY DISPOSE OF THEM OFF SITE, UNLESS OTHERWISE INDICATED TO BE REMOVED AND SALVAGED OR REMOVED AND REINSTALLED.
2. SALVAGE: DETACH ITEMS FROM EXISTING CONDITIONS AND RETURN TO OWNER READY FOR REUSE.
3. REMOVE AND REINSTALL: DETACH ITEMS FROM EXISTING CONDITIONS, PREPARE THEM FOR REUSE, TEMPORARY STORE AS REQUIRED AND REINSTALL THEM AS INDICATED.
4. EXISTING: EXISTING ITEMS OF CONSTRUCTION THAT ARE NOT TO BE REMOVED AND THAT ARE NOT OTHERWISE INDICATED TO BE REMOVED, SALVAGED, OR REMOVED AND REINSTALLED.
5. DRAWINGS ATTEMPT TO SHOW EXISTING CONDITIONS, BUT, ALL EXISTING CONDITIONS MAY NOT BE SHOWN OR VISIBLE ON SITE. CARE MUST BE TAKEN TO ABANDON, TURNOFF OR OTHERWISE SECURE EXISTING ELEMENTS THAT NEED TO BE REMOVED WITH REMOVED STRUCTURE.

KEYNOTE LEGEND

| KEY VALUE | KEYNOTE TEXT |
|---|---|
| D201 | REMOVE EXISTING WALL |
| D206 | REMOVE EXISTING FINISHES, INCLUDING BUT NOT LIMITED TO FLOOR FINISHES AND WALL COVERINGS, ETC |
| D210 | EXISTING DOOR TO REMAIN. REFER TO HARDWARE SCHEDULE FOR REMOVAL OF HARDWARE AS NOTED |
| D211 | EXISTING WINDOW TO REMAIN |
| D212 | REMOVE EXISTING CASEWORK, OR PORTION OF |
| D219 | REMOVE WHITEBOARDS |
| D231 | REMOVE CUBBIES AND UPPER CABINETS |
| D235 | REMOVE EXISTING COLUMN. SHORE EXISTING REMAINING STRUCTURE ABOVE. RE: STRUCTURE |
| D236 | REMOVE SLAB AS REQUIRED FOR NEW PLUMBING AND STRUCTURAL FOUNDATION |
| D237 | REMOVE PORTION OF CARPET FOR NEW WALL LOCATION, CONCRETE REMOVAL AND ETC |
| D239 | EXISTING FIXTURES TO REMAIN. REMOVE AS NECESSARY FOR REMOVAL OF WALL FINISHES OR INSTALLATION OF NEW WALL FINISHES. REFER TO PLUMBING FOR REPLACEMENT OF FACUETS AND FLUSH VALVES |
| D240 | REMOVE EXISTING SURFACE MOUNTED ELECTRIC HANDDRYER, MAKE ELECTRICAL SAFE FOR REINSTALLATION OF NEW HAND DRYERS |
| D243 | REMOVE EXISTING TOILET PARTITIONS |
| D245 | EXISTING DRYWALL TO REMAIN, PREP FOR NEW TILE |
| D246 | EXISTING FLOOR DRAIN TO REMAIN |
| D248 | REMOVE MISC WALL MOUNTED ITEMS SUCH AS MIRRORS, SOAP DISPENSERS, HOOKS, SHELVES, ETC |
| D250 | REMOVE CEILING FINISHES |
| D251 | SALVAGE EXISTING SMART PROJECTOR |
| D257 | REMOVE EXISTING FRP WALL FINISH |
| D258 | EXISTING CONTINOUS GRAB BARS, SALAVAGE FOR REINSTALLATION |
| D260 | REMOVE EXISTING CORNER GUARDS |
| D261 | EXISTING EPOXY FLOORING TO REMAIN, PREP FOR NEW FLOOR TILE |
| D262 | EXISTING HOSE BIB |
| D267 | REMOVE EXSITING SLAB AS REQUIRED FOR NEW PLUMBING LINES OR STRUCTURAL FOUNDATIONS, REF PLUMBING AND STRUCTURAL DWGS |
| D269 | REMOVE EXISTING MODULAR, MODULAR TO BE REPLACED DURING CONSTRUCTION |
| D277 | SALVAGE CASEWORK |
| D290 | EXISTING FIRE ALARM, COORDINATE RELOCATION |
| D294 | REMOVE DOOR HANDLE SET, LEAVE DOOR IN PLACE, REF HARDWARE SCHEDULE FOR REPLACEMENT |
| D298 | REMOVE DOOR AND FRAME. SALVAGE NDE LOCKSET RETURN TO OWNER. REINSTALL SOME PER DOOR HARDWARE SCHEDULE |


TAB Associates
*The Architectural Balance*
0056 Edwards Village Blvd.
Suite 210
Edwards, CO 81632
(970) 766-1470
fax: (970) 766-1471
email: tab@vail.net
www.tabassociates.com

Civil Engineer
Alpine Engineering, Inc.
970-926-3373
Structural Engineer
JH Structural Engineers
303-318-6539
Mechanical Engineer
BG BuildingWorks, Inc.
970-949-6108
Electrical Engineer
BG BuildingWorks, Inc.
970-949-6108


Seal

# Strawberry Park Elementary
## 39620 Amethyst Drive
Steamboat Springs, CO

**Revisions:**

| No | Description | Date |
|---|---|---|
| | | |

**Issue Dates:**
Concept - 11/19/2019
SD's - 1/13/20
DD's - 2/20/20
95% - 03/30/20
CDs - 04/06/20

**Sheet Title:**
**Demo Floor Area B**

**Project No:**
1935.02

**Sheet No:**
D2.02

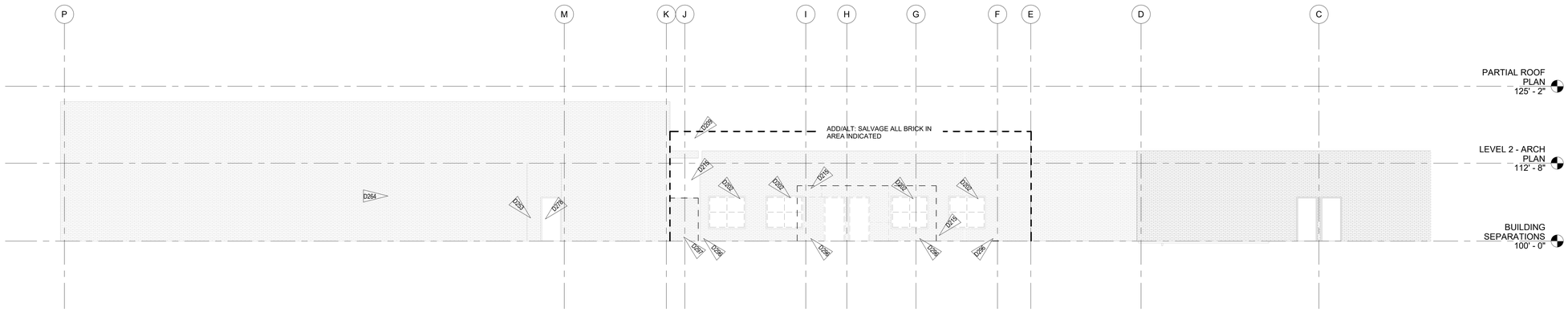


1 D3.01 DEMO EAST
1/8" = 1'-0"

## NOTES:

RCKED Record Set
T.A.
08/05/2020

**GENERAL DEMOLITION NOTES:**

1. DEMOLITION GENERAL NOTES APPLY TO ALL DEMOLITION SHEETS.
2. COORDINATE DEMOLITION AND PHASING EFFORTS WITH ARCHITECT AND OWNER'S REPRESENTATIVES. EVERY EFFORT SHALL BE MADE TO MINIMIZE DISRUPTION OF OWNER'S OPERATIONS AND TO PROVIDE BUILDING USER'S SAFETY. EXCESSIVE NOISE AND VIBRATION SHALL BE PRE-APPROVED AND COORDINATED WITH OWNER'S REPRESENTATION.
3. COORDINATE DEMOLITION WITH OWNER'S REPRESENTATIVE AND ASBESTOS ABATEMENT. PRIMARY ASBESTOS ABATEMENT DEMOLITION WILL INCLUDE BUT IS NOT LIMITED TO THE REMOVAL OF ALL THE EXISTING FLOOR VINYL TILE, EXSITING CORRIDOR CARPETS, EXISTING DRYWALL TEXTURE AND GWB, AND EXISTING ROOFING MATERIALS.
4. VERIFY EXISTING CONDITIONS, DIMENSIONS, AND ELEVATIONS AND NOTIFY ARCHITECT OF DISCREPANCIES.
5. ITEMS NOT SHOWN DASHED ARE TO REMAIN. ALL DASHED ITEMS REPRESENT ITEMS TO BE REMOVED. COORDINATE REMOVAL WITH NEW ITEMS SHOWN IN DRAWINGS.
6. THE OWNER SHALL RESERVE THE RIGHT TO SALVAGE ANY MATERIALS.
7. PROVIDE PROTECTIONS FOR EXISTING BUIDLING MATERIALS AND EQUIPMENT FROM DAMAGE DUE TO DEMOLITION OR CONSTRUCTION-RELATED INCIDENT PREFORMED UNDER THIS CONTRACT.
8. REFER TO MEP AND STRUCTURAL DRAWINGS FOR ADDITIONAL ITEMS TO BE REMOVED, CAPPED OR ALTERED.
9. CONTRACTOR TO COORDINATE REMOVAL OF EXISTING ITEMS WITH INSTALLATIONS OF NEW ITEMS.
10. COORDINATE NEW STRUCTURAL ITEMS WITH REMOVAL OF EXISTING ITEMS. REFER TO STRUCTURAL PLANS FOR ADDITIONAL STRUCTURAL WORK TO EXISTING STRUCTURE.
11. IT IS ASSUMED ITEMS NOT TAGGED AS REMOVED OR SALVAGED WILL BE REMOVED IF ATTACHED TO WALL, CABINET, OR OTHER ITEMS. THIS INCLUDES ITEMS ON WALLS, CEILINGS AND FLOORS.
12. ALL PLUMBING SHOWN AS DASHED AND NOT SPECIFICALLY NOTED WILL BE REMOVED. ALL PLUMBING NEEDS TO BE MODIFIED TO MATCH NEW LAYOUT. REFER TO PLUMBING PLANS FOR EXTENT OF WORK.
13. DRAWINGS ATTEMPT TO SHOW EXISTING CONDITIONS. BUT, ALL EXISTING CONDITIONS MAY NOT BE SHOWN OR VISIBLE ON SITE. CARE MUST BE TAKEN TO ABANDON, TURNOFF OR OTHERWISE SECURE EXISTING ELEMENTS THAT NEED TO BE REMOVED WITH REMOVED STRUCTURE. WHEN CONFLICTS ARE FOUND CONTACT ARCHITECT FOR DIRECTION.

**DEMOLITION DEFINITIONS:**

1. REMOVE: DETACH ITEMS FROM EXISTING CONSTRUCTION AND LEGALLY DISPOSE OF THEM OFF SITE, UNLESS OTHERWISE INDICATED TO BE REMOVED AND SALVAGED OR REMOVED AND REINSTALLED.
2. SALVAGE: DETACH ITEMS FROM EXISTING CONDITIONS AND RETURN TO OWNER READY FOR REUSE.
3. REMOVE AND REINSTALL: DETACH ITEMS FROM EXISTING CONDITIONS, PREPARE THEM FOR REUSE, TEMPORARY STORE AS REQUIRED AND REINSTALL THEM AS INDICATED.
4. EXISTING: EXISTING ITEMS OF CONSTRUCTION THAT ARE NOT TO BE REMOVED AND THAT ARE NOT OTHERWISE INDICATED TO BE REMOVED, SALVAGED, OR REMOVED AND REINSTALLED.
5. DRAWINGS ATTEMPT TO SHOW EXISTING CONDITIONS. BUT, ALL EXISTING CONDITIONS MAY NOT BE SHOWN OR VISIBLE ON SITE. CARE MUST BE TAKEN TO ABANDON, TURNOFF OR OTHERWISE SECURE EXISTING ELEMENTS THAT NEED TO BE REMOVED WITH REMOVED STRUCTURE.

**DEMOLITION LEGEND**

- EXISTING CONSTRUCTION TO BE REMOVED
- EXISTING CONSTRUCTION TO REMAIN
- EXISTING SLAB AREA TO BE DEMO'ED FOR NEW PLUMBING AND/OR SANITARY LINES

KEYNOTE LEGEND

| KEY VALUE | KEYNOTE TEXT |
|---|---|
| D202 | REMOVE EXISTING WINDOW. COORDINATE WITH STRUCT DRAWINGS |
| D209 | EXISTING WALL TO REMAIN |
| D215 | REMOVE PORTION OF EXISTING WALL |
| D253 | SALVAGE KEYPAD |
| D264 | BRICK TO REMAIN. DEMO BRICK AS REQ PER STRUCT DWG |
| D278 | REMOVE DOOR & HARDWARE, FRAME TO REMAIN |
| D296 | SALVAGE BRICK SIDING FOR REINSTALLATION PATCHWORK |
| D297 | COORDINATE ELECTRICAL AND GAS RELOCATION WITH CIVIL |


TAB Associates
*The Architectural Balance*
0056 Edwards Village Blvd.
Suite 210
Edwards, CO 81632
(970) 766-1470
fax: (970) 766-1471
email: tab@vail.net
www.tabassociates.com

Civil Engineer
Alpine Engineering, Inc.
970-926-3373
Structural Engineer
JH Structural Engineers
303-318-6539
Mechanical Engineer
BG BuildingWorks, Inc.
970-949-6108
Electrical Engineer
BG BuildingWorks, Inc.
970-949-6108


Seal

# Strawberry Park Elementary
## 39620 Amethyst Drive
## Steamboat Springs, CO

Revisions:

| No | Description | Date |
|---|---|---|
| | | |

Issue Dates:
Concept - 11/19/2019
SD's - 1/13/20
DD's - 2/20/20
95% - 03/30/20
CDs - 04/06/20

Sheet Title:
**Demo Exterior Elevations**

Project No:
1935.02

Sheet No:
D3.01

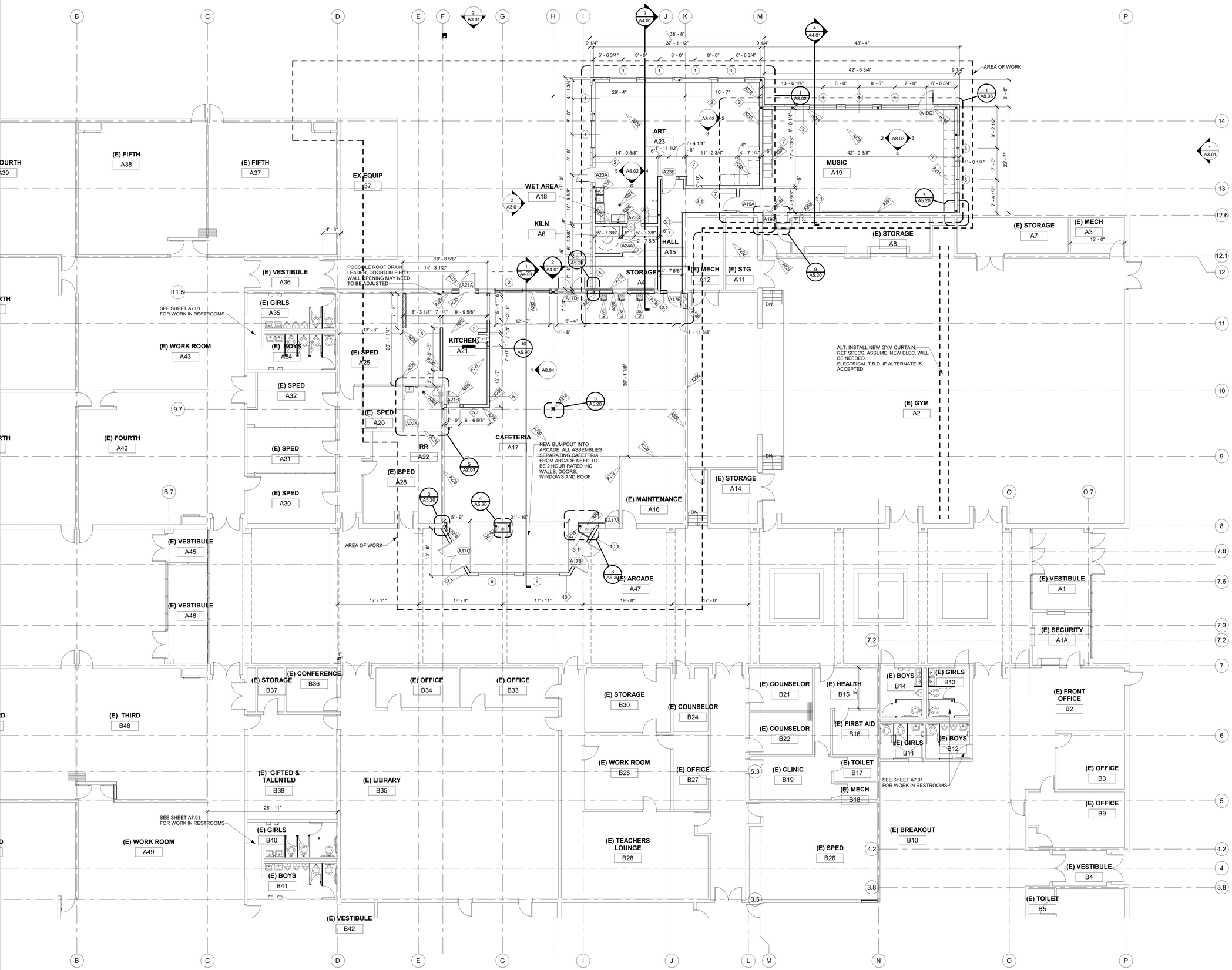


1 A2.03 BUILDING SEPARATIONS
1/8" = 1'-0"

TRUE N
BUILDING NORTH

## NOTES:

**FLOOR PLAN GENERAL NOTES:**

RCBD Record Set
3.1A
05/14/2020

1. PATCH EXISTING FINISHES TO REMAIN. REPAIRED SURFACES TO BE FLUSH WITH ADJACENT FINISH SURFACES OF THE SAME QUALITY AS NEW CONSTRUCTION PRIOR TO INSTALLING NEW FINISHES. REFER TO THE FINISH MANUFACTURER'S GUIDELINES FOR INSTALLATION.
2. PATCH EXISTING FINISHES TO MAINTAIN THE FIRE RATING. ADD FIRE-SMOKE DAMPERS WHERE NEW DUCTS CROSS. ADD FIRE STOP AT ALL
3. PATCH WALLS AT REMOVED RECEPTACLE OPENINGS SO AS TO RECEIVE SUBSEQUENT WORK.
4. PATCH AND LEVEL FLOOR SUBSTRATES TO RECEIVE NEW WORK AS SCHEDULED.
5. COORDINATE ALL FLOOR CORE DRILLING WITH EXISTING.
6. DO NOT SCALE DRAWINGS.
7. IN ROOMS WITH FLOOR DRAINS, DO NOT SLOPE FLOOR TO SUMP. FLOOR DRAINS TO BE FLUSH WITH TILE.
8. ALL SPOT ELEVATIONS SHOWN ON THE FLOOR PLANS OUTSIDE THE BUILDING RELATE TO USGS ELEVATIONS. ALL SPOT ELEVATIONS INSIDE THE BUILDING REFER TO BUILDING REFERENCE ELEVATIONS. NOTIFY ARCHITECT IMMEDIATELY SHOULD CONDITIONS BE FOUND CONTRADICTORY TO THESE DRAWINGS.
9. ALL ANGLES SHOWN ON THE FLOOR PLANS ARE 90 DEGREES UNLESS OTHERWISE NOTED.
10. ALL DIMENSIONS ARE TO GRID LINE, FACE OF CONCRETE OR MASONRY, OR FACE OF GYPSUM BOARD, UNLESS OTHERWISE NOTED.
11. ALL FLOOR PLAN DIMENSIONS TO MASONRY ARE NOMINAL DIMENSIONS, UNLESS NOTED AS ACTUAL.
12. "TB" NEW CORK TACKBOARDS OR "MB" NEW MARKERBOARDS
13. NEW ROOM SIGNAGE BY OWNER.

KEYNOTE LEGEND

| KEY VALUE | KEYNOTE TEXT |
|---|---|
| A205 | INSTALL NEW KITCHEN EQUIPMENT, REF KITCHEN DWGS |
| A206 | EX CMU WALL, PATCH AS NEEDED AND REPAINT ENTIRE WALL |
| A208 | INSTALL NEW CASEWORK WITH UPPER AND LOWER CABINETS. REF INTERIOR ELEVATIONS |
| A209 | INSTALL NEW FLOOR FINISHES TO MATCH EX FLOOR FINISH ELEVATION |
| A210 | EXISTING AND NEW BRICK, PREP, PRIME AND PAINT |
| A211 | INSTALL NEW MUSIC INSTRUMENT STORAGE CABINETS |
| A214 | INSTALL NEW DRYWALL WRAP AROUND STRUCTURAL COLUMN, REF STRUCT |
| A216 | EX. WALL OR COLUMN TO REMAIN, PATCH SECTION WHERE DEMO'D WALL WAS CONNECTED |
| A218 | INSTALL NEW TACKBOARDS WITH PROJECTABLE/MAGNETIC WHITEBOARD ON TEACHING WALL |
| A220 | EXISTING WALL TO REMAIN. PATCH DRYWALL AS NECESSARY, REPAINT ENTIRE WALL AFTER. PATCHING OF WALL ABOVE EXISTING CEILING MAY BE NECESSARY TO EXTEND TO DECK |
| A225 | INSTALL NEW DRINKING FOUNTAIN WITH BOTTLE FILLER, REF MEP DWGS |
| A227 | INSTALL NEW KITCHEN WALL TILE |
| A229 | EXISTING DOOR TO REMAIN |
| A230 | NEW DOOR IN AN EXISTING FRAME, REF DOOR SCHEDULE |
| A231 | INSTALL NEW DRINKING FOUNTAIN, REF MEP DWGS |
| A232 | INSTALL ROLLER BLINDS IN ALL WINDOWS IN ROOM, INCLUDING DOORS. RE:11/A5.70 |
| A235 | INFILL WALL W/ SIMILAR EX. WALL TYPE 2:1 & SALVAGE BRICK WHERE EXISTING WINDOWS AND DOORS ARE TO BE REMOVED. TOOTH IN BRICK @ JAMBS. |
| A236 | INFILL EXISTING OPENING WITH CMU, PAINT ENTIRE WALL TO MATCH. REF STRUCT DWGS |
| A237 | WRAP WALL WITH STANINLESS STEEL PANELS, ALL SIDES, TO CEILING AND UNDER HOOD |
| A238 | REFER TO KITCHEN DRAWINGS FOR HEIGHT OF WALL BELOW. APPLY WALL TILE, SEE ELEVATION |
| A240 | INSTALL VERTICAL DRYWALL CONTROL JOINT |
| A252 | NEW FRP ON 2 WALLS ABOVE FLOOR SINK 4' TALL + MOP SHELF PER SPEC |
| A255 | INSTALL NEW DOUBLE SWING SHORT DOOR |
| A256 | INSTALL 12" TALL X WIDTH OF SINK, CORIAN BACKSPLASH |
| A261 | INSTALL (2) NEW 4'x 4' TACKBOARDS WITH A 8'x 4' MAGNETIC WHITEBOARD AND A 6' X 4' PROJECTABLE MARKER BOARD WITH MUSIC STAFF, ON TEACHING WALL |
| A269 | NEW FLOOR DRAIN |
| A270 | ADJUST DOOR INSTALL LOCATION TO ALIGN WITH BRICK COURSING |
| A273 | ELECTRIC HAND DRYER |
| A291 | DRYALL WRAP PER DETAIL 7/A5.30 |
| A292 | NEW OFFICE AREA. RE: MEP DRAWINGS FOR SCOPE |

KEY PLAN

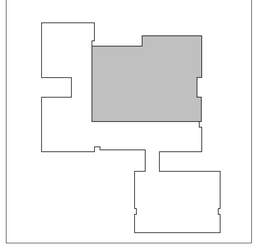


TAB Associates
*The Architectural Balance*
0056 Edwards Village Blvd.
Suite 210
Edwards, CO 81632
(970) 766-1470
fax: (970) 766-1471
email: tab@vail.net
www.tabassociates.com

Civil Engineer
Alpine Engineering, Inc.
970-926-3373
Structural Engineer
JH Structural Engineers
303-318-6539
Mechanical Engineer
BG BuildingWorks, Inc.
970-949-6108
Electrical Engineer
BG BuildingWorks, Inc.
970-949-6108


Seal

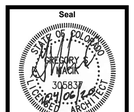


# Strawberry Park Elementary
# 39620 Amethyst Drive
## Steamboat Springs, CO

Revisions:

| No | Description | Date |
|---|---|---|
| | | |

Issue Dates:
Concept - 11/19/2019
SD's - 1/13/20
DD's - 2/20/20
95% - 03/30/20
CDs - 04/06/20

Sheet Title:
**Main Level Floor Area A**

Project No:
1935.02

Sheet No:
A2.03

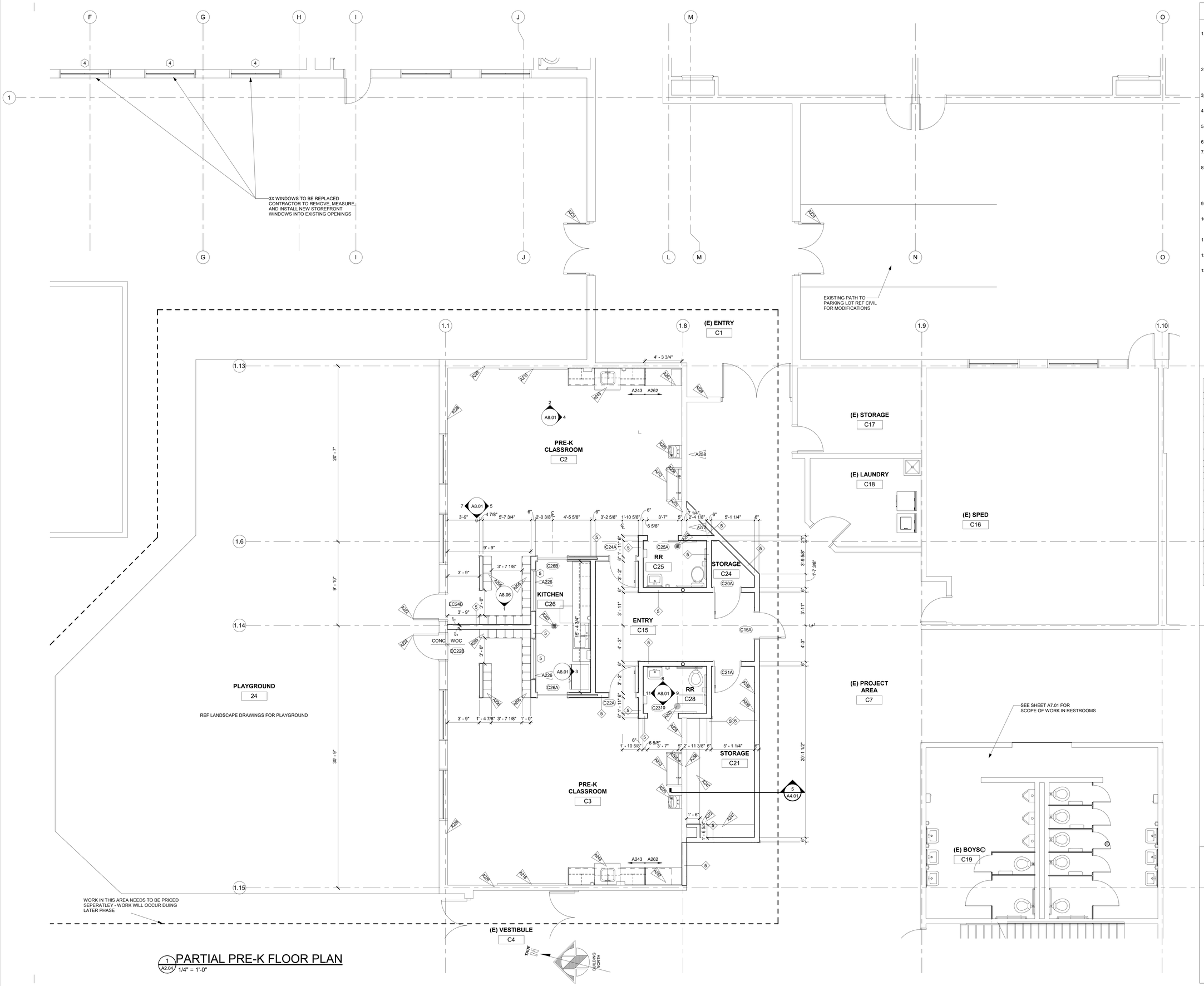


1 A2.04 PARTIAL PRE-K FLOOR PLAN
1/4" = 1'-0"

## NOTES:

**FLOOR PLAN GENERAL NOTES:**

RECORD Released Set
REF TA
REVISED 04/06/20

1. PATCH EXISTING FINISHES TO REMAIN. REPAIRED SURFACES TO BE FLUSH WITH ADJACENT FINISH SURFACES, TO THE SAME QUALITY AS NEW CONSTRUCTION PRIOR TO INSTALLING NEW FINISHES. REFER TO THE FINISH MANUFACTURER'S GUIDELINES FOR INSTALLATION.
2. PATCH EXISTING FINISHED WALLS, FLOOR CEILINGS, ETC. SO AS TO MAINTAIN THE FIRE RATING. ADD FIRE-SMOKE DAMPERS WHERE NEW DUCTS CROSS. ADD FIRE STOP AT ALL
3. PATCH WALLS AT REMOVED RECEPTACLE OPENINGS SO AS TO RECEIVE SUBSEQUENT WORK.
4. PATCH AND LEVEL FLOOR SUBSTRATES TO RECEIVE NEW WORK AS SCHEDULED.
5. COORDINATE ALL FLOOR CORE DRILLING WITH EXISTING.
6. DO NOT SCALE DRAWINGS.
7. IN ROOMS WITH FLOOR DRAINS, DO NOT SLOPE FLOOR TO SUMP. FLOOR DRAINS TO BE FLUSH WITH TILE.
8. ALL SPOT ELEVATIONS SHOWN ON THE FLOOR PLANS OUTSIDE THE BUILDING RELATE TO USGS ELEVATIONS. ALL SPOT ELEVATIONS INSIDE THE BUILDING REFER TO BUILDING REFERENCE ELEVATIONS. NOTIFY ARCHITECT IMMEDIATELY SHOULD CONDITIONS BE FOUND CONTRADICTORY TO THESE DRAWINGS.
9. ALL ANGLES SHOWN ON THE FLOOR PLANS ARE 90 DEGREES UNLESS OTHERWISE NOTED.
10. ALL DIMENSIONS ARE TO GRID LINE, FACE OF CONCRETE OR MASONRY, OR FACE OF GYPSUM BOARD, UNLESS OTHERWISE NOTED.
11. ALL FLOOR PLAN DIMENSIONS TO MASONRY ARE NOMINAL DIMENSIONS, UNLESS NOTED AS ACTUAL.
12. "TB" NEW CORK TACKBOARDS OR "MB" NEW MARKERBOARDS
13. NEW ROOM SIGNAGE BY OWNER.

KEYNOTE LEGEND

| KEY VALUE | KEYNOTE TEXT |
|---|---|
| A203 | NEW FLOOR DRAIN |
| A213 | INSTALL NEW TROUGH HANDWASHING SINK, 2 FAUCETS |
| A218 | INSTALL NEW TACKBOARDS WITH PROJECTABLE/MAGNETIC WHITEBOARD ON TEACHING WALL |
| A222 | EXISTING DOOR FRAME TO REMAIN. INSTALL NEW DOOR AND HARDWARE SET PER DOOR SCHEDULE |
| A225 | INSTALL NEW DRINKING FOUNTAIN WITH BOTTLE FILLER, REF MEP DWGS |
| A226 | NEW ONE WAY VIEWING WINDOW |
| A228 | EXISTING WALL TO REMAIN |
| A229 | EXISTING DOOR TO REMAIN |
| A243 | INSTALL SALVAGED CABINETS WITH NEW SOLID SURFACE COUNTER |
| A247 | 18" DEEP LAMINATED ADJSUTABLE SHELVING. SEE DETAIL 4/A8.05 |
| A256 | INSTALL 12" TALL X WIDTH OF SINK, CORIAN BACKSPLASH |
| A258 | PATCH DRYWALL AS NECCESSARY AT REMOVE CUBBIES AND UPPER CABINETS. REPAINT ENTIRE WALL |
| A259 | PEG BOARD. HEAVY DUTY POLY ULINE 48X24 INSTALL TOP OF BOARD AT 60" AFF |
| A262 | NEW DIAPER CHANGING STATION |
| A272 | RE: MECHANICAL FOR NEW RETURN AIR PATH. PROVIDE WALL EXTENSION AND OR SHAFT |
| A295 | INSTALL NEW PRE-K CUBBIES, REFER TO SECTION DETAILS, A8.06 |
| A296 | INSTALL NEW PRE-K CUBBIES AGAINST NEW HALF WALL, SEE DETAILS A8.06 |

KEY PLAN

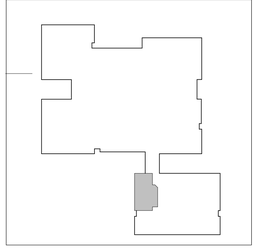


TAB Associates
*The Architectural Balance*
0056 Edwards Village Blvd.
Suite 210
Edwards, CO 81632
(970) 766-1470
fax: (970) 766-1471
email: tab@vail.net
www.tabassociates.com

Civil Engineer
Alpine Engineering, Inc.
970-926-3373
Structural Engineer
JH Structural Engineers
303-318-6539
Mechanical Engineer
BG BuildingWorks, Inc.
970-949-6108
Electrical Engineer
BG BuildingWorks, Inc.
970-949-6108


Seal

STEVE D. COLDEWAY
GREGORY A. WACK
305837
04/06/2020
LICENSED ARCHITECT

# Strawberry Park Elementary
# 39620 Amethyst Drive
## Steamboat Springs, CO

Revisions:

| No | Description | Date |
|---|---|---|
| | | |

Issue Dates:
Concept - 11/19/2019
SD's - 1/13/20
DD's - 2/20/20
95% - 03/30/20
CDs - 04/06/20

Sheet Title:
**Pre-K Plan Floor Area B**

Project No:
1935.02

Sheet No:
A2.04

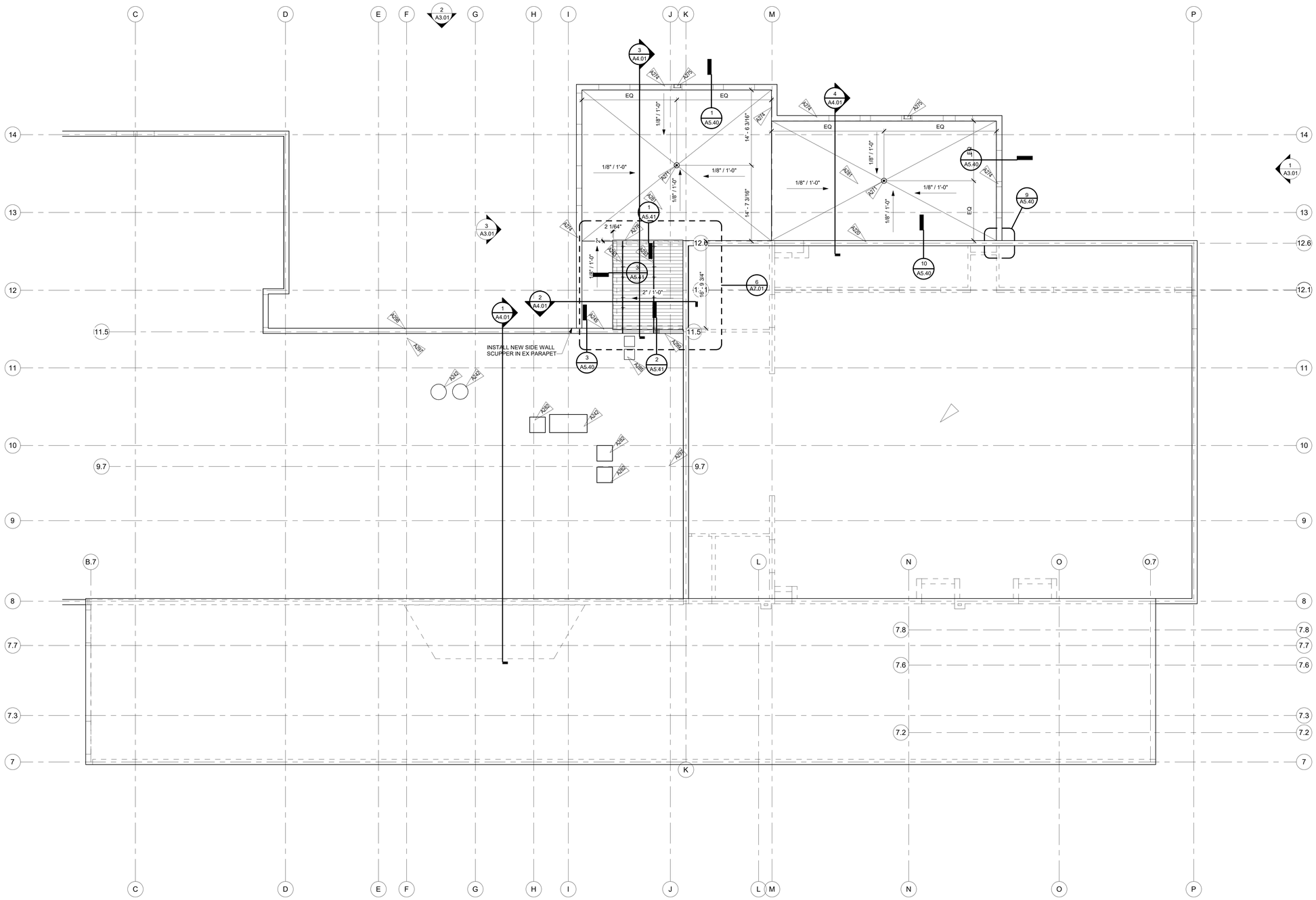


1 A2.05 PARTIAL ROOF PLAN
1/8" = 1'-0"

## NOTES:

RCRBD Record Set
05/14/2020

**ROOF PLAN GENERAL NOTES:**

1. FLAT ROOFING TO BE FULLY ADHERED 90 MIL EPDM ON 1/2" PROTECTION BOARD OVER R-30 CONTINUOUS INSULATION.
2. REFER TO MECHANICAL AND ELECTRICAL DRAWINGS FOR ADDITIONAL SCOPE.
3. EXISTING ROOF STRUCTURE INCLUDES METAL DECK AT ALL LOCATIONS.
4. ALL GUTTERS AND DOWNSPOUTS TO REVIEVE HEAT TAPE FOR ENTIRE LENGTH REF DIAGRAM ON ELECTRICAL PLANS

### ROOF FINISH LEGEND

R-1 90 MIL REINFORCED EPDM

R-2 METAL STANDING SEAM ROOF

METAL FLASHING, GUTTERS, AND DOWNSPOUTS

OVERHANGS ARE AS DIMENSIONED

| KEYNOTE LEGEND | |
|---|---|
| KEY VALUE | KEYNOTE TEXT |
| A220 | EXISTING WALL TO REMAIN. PATCH DRYWALL AS NECESSARY, REPAINT ENTIRE WALL AFTER. PATCHING OF WALL ABOVE EXISTING CEILING MAY BE NECESSARY TO EXTEND TO DECK |
| A242 | NEW MECHANICAL EQUIPMENT, REF MEP DWGS FOR SCOPE |
| A245 | EXISTING PARAPET TO REMAIN |
| A253 | INSTALL NEW SNOW RETENTION SYSTEM, RE:4/A5.40 |
| A271 | NEW ROOF DRAIN WITH HEAT TRACE, REF MEP DWGS AND DETAIL 6/A5.40 |
| A274 | INSTALL NEW PARAPET |
| A275 | INSTALL NEW ROOF OVERFLOW DRAIN WITH HEAT TRACE, RE:11/A5.40 |
| A278 | NEW 12" STANDING SEAM METAL ROOF, REF EXTERIOR ELEVATIONS |
| A281 | INSTALL NEW 90 MIL REINFORCED EPDM ROOF WITH TAPERED R-35 MIN RIGID INSULATION |
| A282 | EXISTING MECHANICAL EQUIPMENT, REF MEP DWGS FOR SCOPE |
| A285 | INSTALL NEW WALKWAY PADS |
| A297 | EXISTING ROOF DRAIN |
| A298 | EXISTING ROOF SCUPPER TO REMAIN |
| A299 | EXISTING ROOF SCUPPER TO BE REMOVE AND PARPAET PATCHED |

KEY PLAN

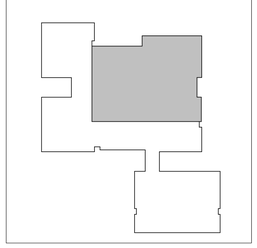

TAB Associates
*The Architectural Balance*
0056 Edwards Village Blvd.
Suite 210
Edwards, CO 81632
(970) 766-1470
fax: (970) 766-1471
email: tab@vail.net
www.tabassociates.com

Civil Engineer
Alpine Engineering, Inc.
970-926-3373
Structural Engineer
JH Structural Engineers
303-318-6539
Mechanical Engineer
BG BuildingWorks, Inc.
970-949-6108
Electrical Engineer
BG BuildingWorks, Inc.
970-949-6108

Seal

# Strawberry Park Elementary
# 39620 Amethyst Drive
## Steamboat Springs, CO

Revisions:

| No | Description | Date |
|---|---|---|
| | | |

Issue Dates:
Concept - 11/19/2019
SD's - 1/13/20
DD's - 2/20/20
95% - 03/30/20
CDs - 04/06/20

Sheet Title:
**Roof Plan**

Project No:
1935.02

Sheet No:
A2.05

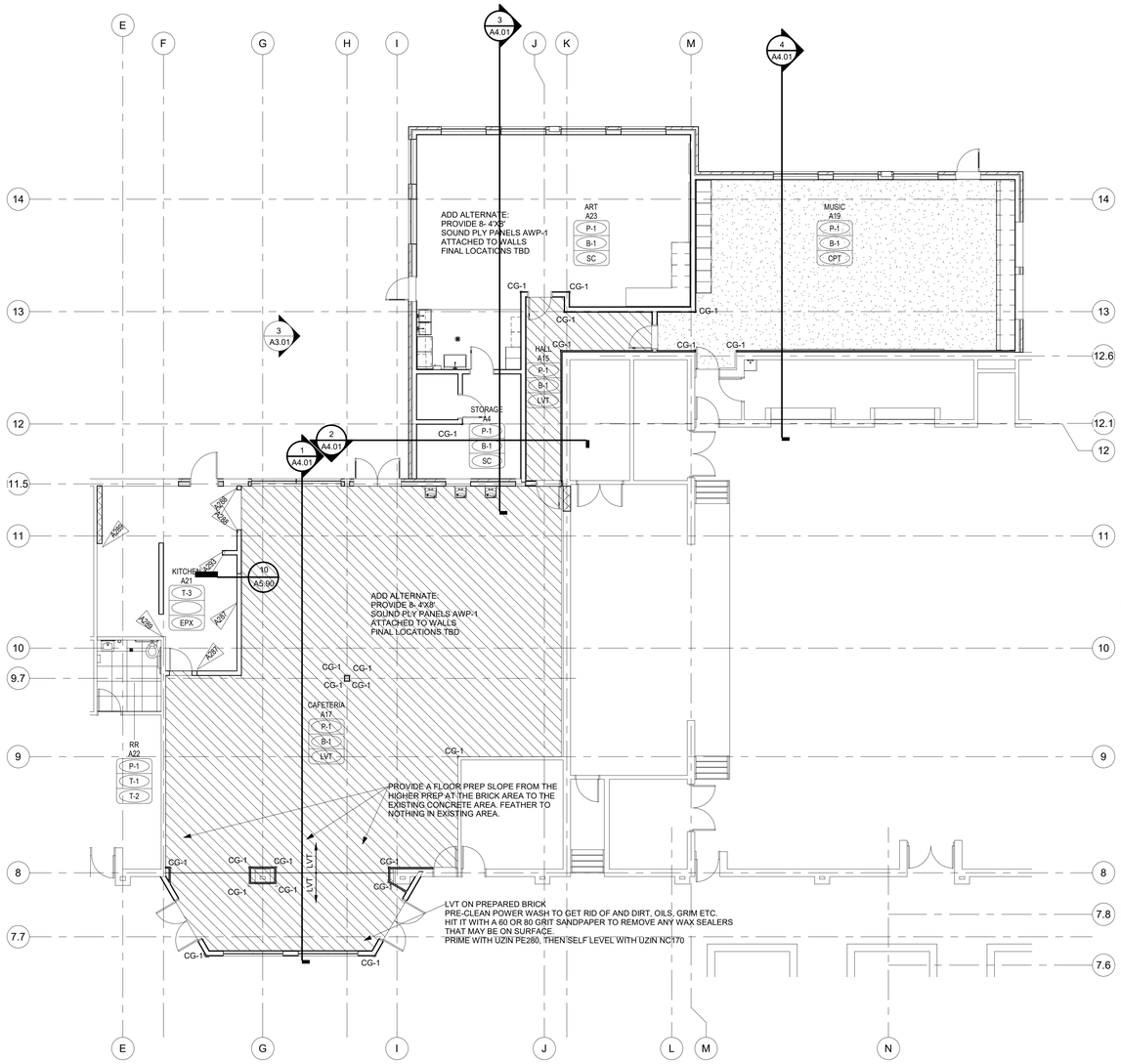


1 A2.06 AREA A FINISH FLOOR PLAN
1/8" = 1'-0"

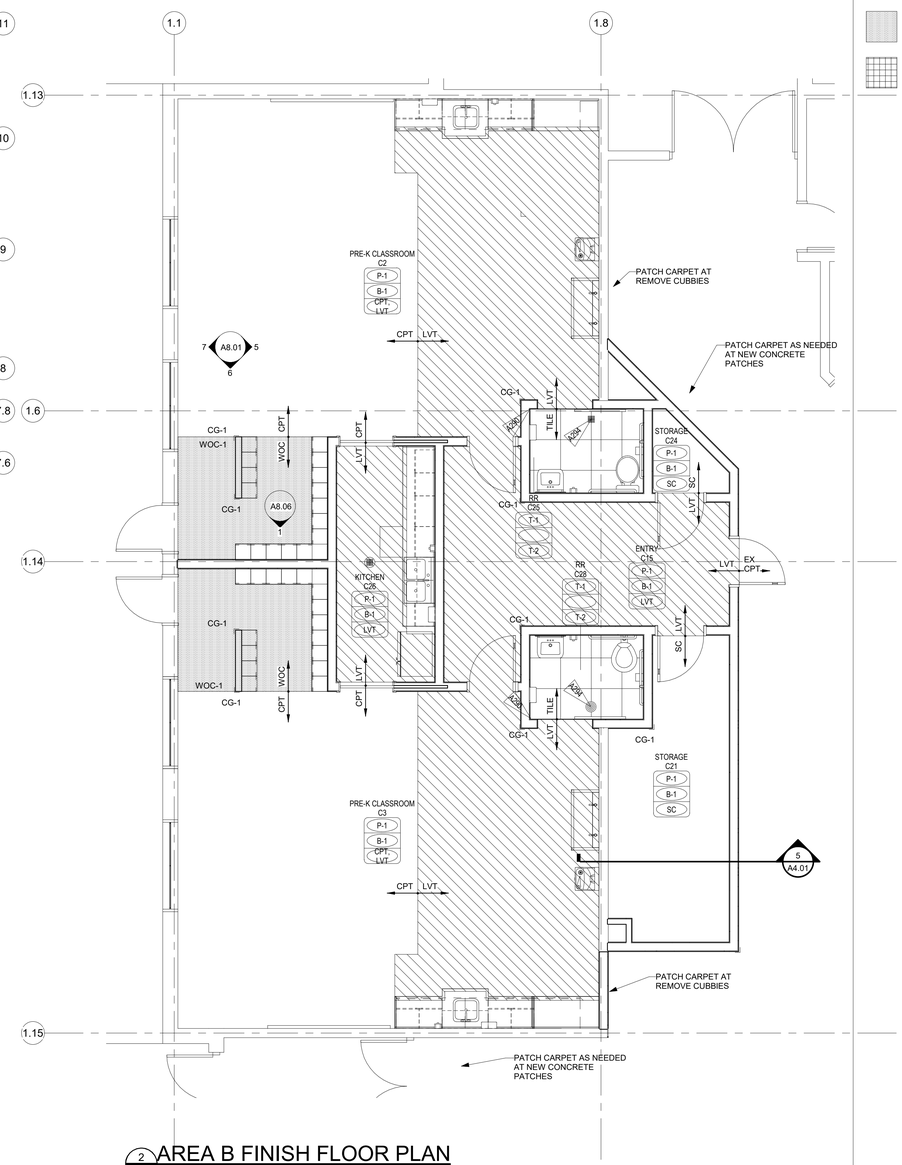


2 A2.06 AREA B FINISH FLOOR PLAN
1/4" = 1'-0"

## NOTES:

SYMBOL LEGEND
ROOM #
WALL
BASE
FLOOR

RCRBD Record Set
T.A.
05/14/2020

| KEYNOTE LEGEND | |
|---|---|
| KEY VALUE | KEYNOTE TEXT |
| A287 | RE: KITCHEN PLANS FOR SHELVING UNDER COUNTER. PROVIDE DRYWALL FINISH BEHIND COUNTER SHELVING |
| A288 | TILE STOPS AT OUTSIDE CORNER ON KITCHEN SIDE, SEE SIMILAR OTSIDE TILE CORNER DETAIL WITH SCHULTER TRIM |
| A289 | USE SCHLUTER CORNER TRIM SIMILAR TO 7/A5.30 |
| A290 | TILE START POINT, FLOOR AND WALL TILES ALIGN FROM THIS POINT |
| A293 | OUTSIDE TILE CORNER SEE TYPICAL DETAIL 7/A5.30 |
| A294 | NEW FLOOR DRAIN - FLOOR DRAIN LOCATIONS TO BE INSTALLED PER TILE LAYOUT |

### FLOOR MATERIAL LEGEND

- LVT
- CARPET
- WALK-OFF CARPET
- WALK-OFF CARPET


TAB Associates
*The Architectural Balance*
0056 Edwards Village Blvd.
Suite 210
Edwards, CO 81632
(970) 766-1470
fax: (970) 766-1471
email: tab@vail.net
www.tabassociates.com

Civil Engineer
Alpine Engineering, Inc.
970-926-3373
Structural Engineer
JH Structural Engineers
303-318-6539
Mechanical Engineer
BG BuildingWorks, Inc.
970-949-6108
Electrical Engineer
BG BuildingWorks, Inc.
970-949-6108


Seal

# Strawberry Park Elementary
# 39620 Amethyst Drive
Steamboat Springs, CO

Revisions:

| No | Description | Date |
|---|---|---|
| | | |

Issue Dates:
Concept - 11/19/2019
SD's - 1/13/20
DD's - 2/20/20
95% - 03/30/20
CDs - 04/06/20

Sheet Title:
**Floor Finish Plans**

Project No:
1935.02

Sheet No:
A2.06

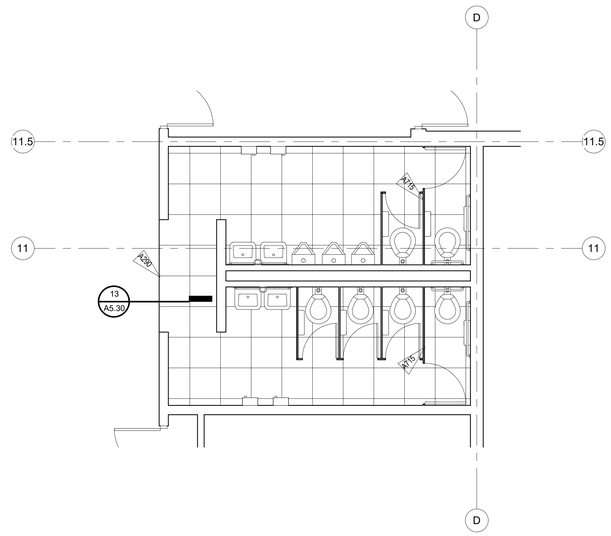


1 A2.07 RESTROOMS-A34-A35 FLOOR FINISH PLAN
1/4" = 1'-0"

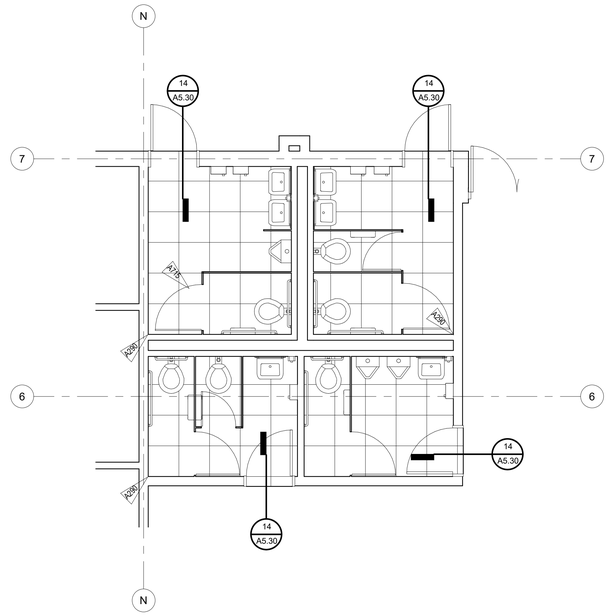


2 A2.07 RESTROOMS-B14-B15 FLOOR FINISH
1/4" = 1'-0"

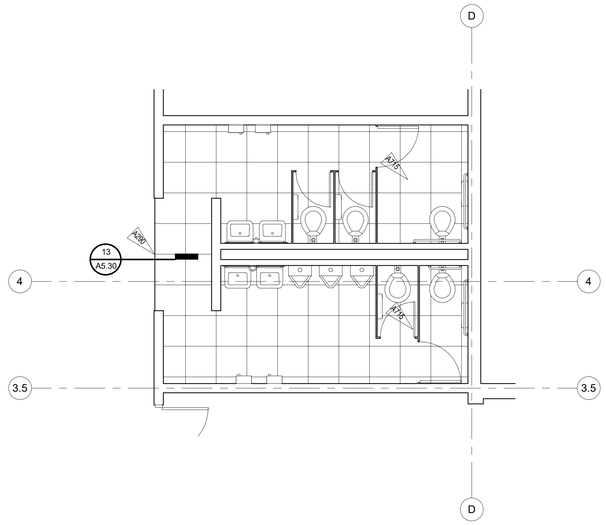


3 A2.07 RESTROOMS-B40-B41 FLOOR FINISH
1/4" = 1'-0"

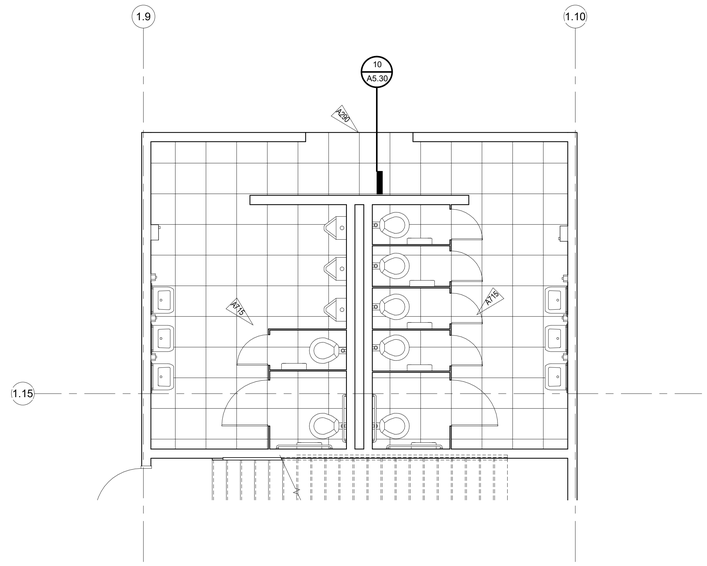


4 A2.07 RESTROOMS-C19-C20 FLOOR FINISH
1/4" = 1'-0"

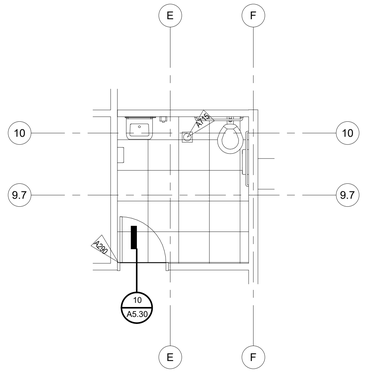


5 A2.07 RESTROOM A22 FLOOR FINISH
1/4" = 1'-0"

NOTES:

RCRBD Record Set
T.A.
05/14/2020

FLOOR MATERIAL LEGEND

- LVT
- CARPET
- WALK-OFF CARPET
- WALK-OFF CARPET

| KEYNOTE LEGEND | |
|---|---|
| KEY VALUE | KEYNOTE TEXT |
| A290 | TILE START POINT, FLOOR AND WALL TILES ALIGN FROM THIS POINT |
| A715 | EXISTING FLOOR DRAIN - INSTALL TILE PER DETAILS 8-9/A5.30 |


TAB Associates
*The Architectural Balance*
0056 Edwards Village Blvd.
Suite 210
Edwards, CO 81632
(970) 766-1470
fax: (970) 766-1471
email: tab@vail.net
www.tabassociates.com

Civil Engineer
Alpine Engineering, Inc.
970-926-3373
Structural Engineer
JH Structural Engineers
303-318-6539
Mechanical Engineer
BG BuildingWorks, Inc.
970-949-6108
Electrical Engineer
BG BuildingWorks, Inc.
970-949-6108


Seal

# Strawberry Park Elementary
## 39620 Amethyst Drive
Steamboat Springs, CO

Revisions:

| No | Description | Date |
|---|---|---|
| | | |

Issue Dates:
Concept - 11/19/2019
SD's - 1/13/20
DD's - 2/20/20
95% - 03/30/20
CDs - 04/06/20

Sheet Title:
**Floor Finish Plans**

Project No:
1935.02

Sheet No:
A2.07

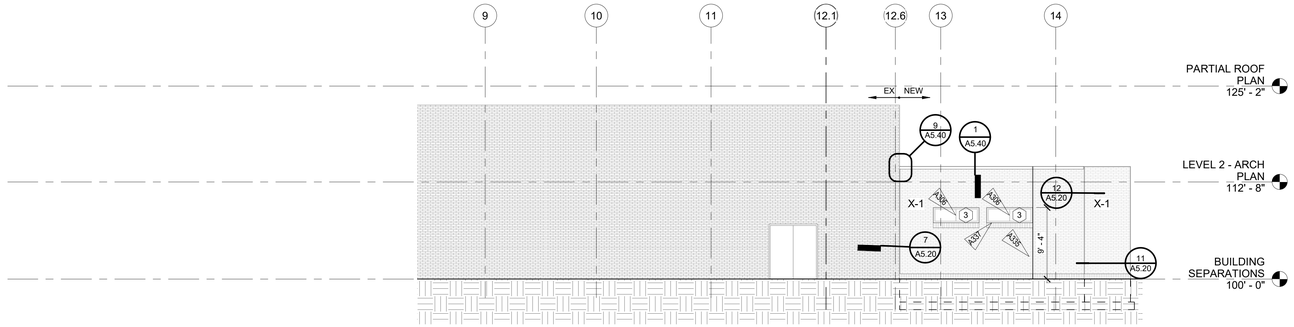


1 A3.01 SOUTH
1/8" = 1'-0"

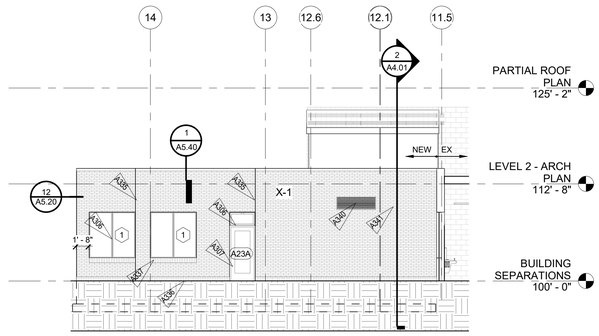


3 A3.01 PARTIAL NORTH ELEVATION ART
1/8" = 1'-0"

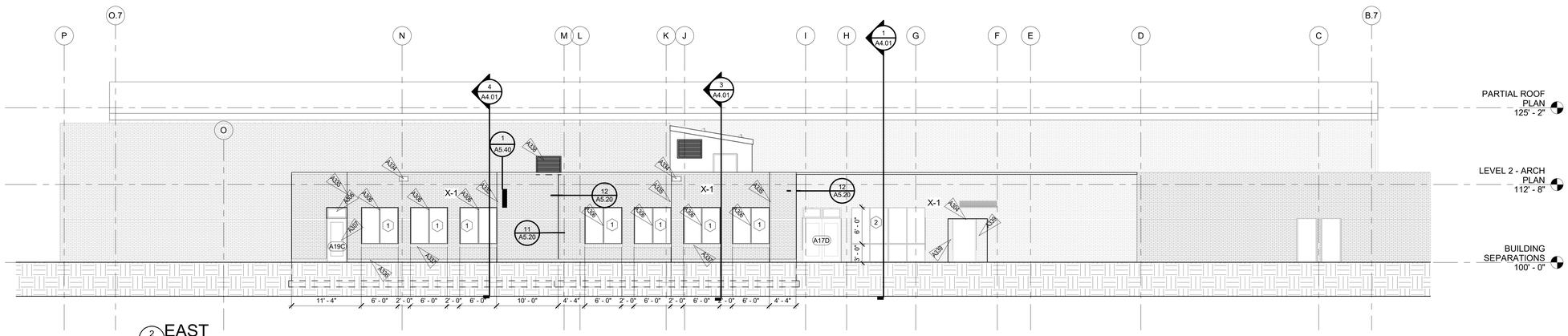


2 A3.01 EAST
1/8" = 1'-0"

## NOTES:

RCRBD Record Set
T.A.
05/14/2020

**EXTERIOR MATERIAL LEGEND:**

| | |
|---|---|
| EX-1 | EXISTING BRICK |
| X-1 | NEW BRICK TO MATCH EXISTING |
| ER-1 | EXISTING EPDM |
| R-1 | NEW 90 MIL FULLY ADHERED REINFORCED EPDM |
| CJ | CONTROL JOINT |

KEYNOTE LEGEND

| KEY VALUE | KEYNOTE TEXT |
|---|---|
| A304 | INSTALL NEW DOOR IN EXISTING WALL REF DOOR SCHEDULE |
| A306 | INSTALL NEW GLAZING, REF WINDOW SCHEDULE |
| A307 | INSTALL NEW DOOR, REF DOOR SCHEDULE |
| A334 | NEW WALL SCUPPER. RE DETAIL |
| A335 | MASONRY CONTROL JOINT, RE: 13/A5.20 |
| A336 | BRICK SOLIDER STARTED BASE COURSE |
| A337 | BRICK SOLIDER SILL COURSE |
| A338 | EXISTING LOUVER REUSED, RE: MECH |
| A339 | INFILL NEW WALL INFILL WITH SALVAGED BRICK |
| A340 | LOUVER PER MECH, SEE DETAILS 9,10,11/A5.70 |
| A341 | KILN EXHAUST. PER MECH |
| X-1 | NEW BRICK TO MATCH EXISTING |


TAB Associates
*The Architectural Balance*
0056 Edwards Village Blvd.
Suite 210
Edwards, CO 81632
(970) 766-1470
fax: (970) 766-1471
email: tab@vail.net
www.tabassociates.com

Civil Engineer
Alpine Engineering, Inc.
970-926-3373

Structural Engineer
JH Structural Engineers
303-318-6539

Mechanical Engineer
BG BuildingWorks, Inc.
970-949-6108

Electrical Engineer
BG BuildingWorks, Inc.
970-949-6108


Seal

# Strawberry Park Elementary
## 39620 Amethyst Drive
Steamboat Springs, CO

Revisions:

| No | Description | Date |
|---|---|---|
| | | |

Issue Dates:
Concept - 11/19/2019
SD's - 1/13/20
DD's - 2/20/20
95% - 03/30/20
CDs - 04/06/20

Sheet Title:
**Exterior Elevations**

Project No:
1935.02

Sheet No:
A3.01

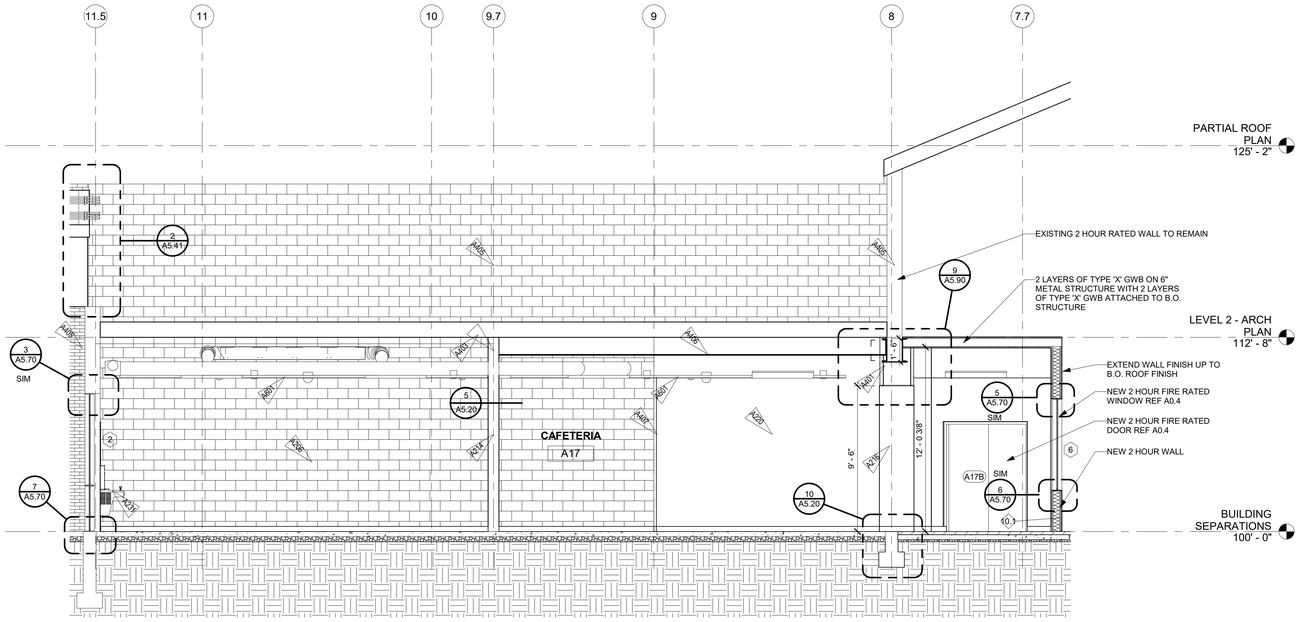


1 A4.01 CAFETERIA A17
1/4" = 1'-0"

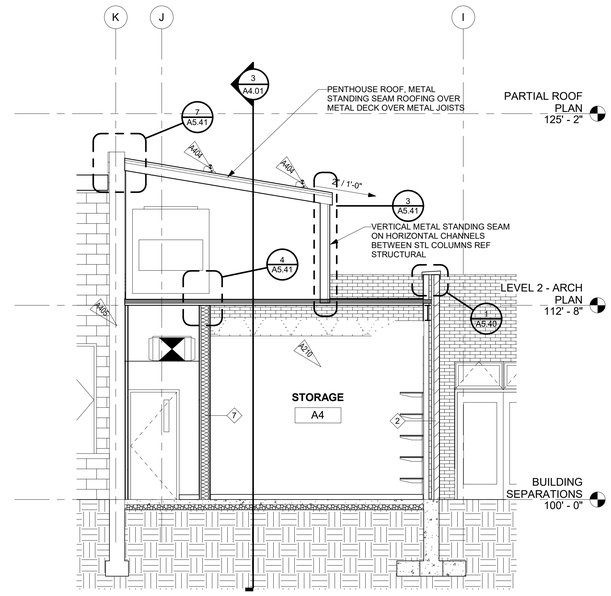


2 A4.01 MECH PENTHOUSE CROSS SECTION
1/4" = 1'-0"

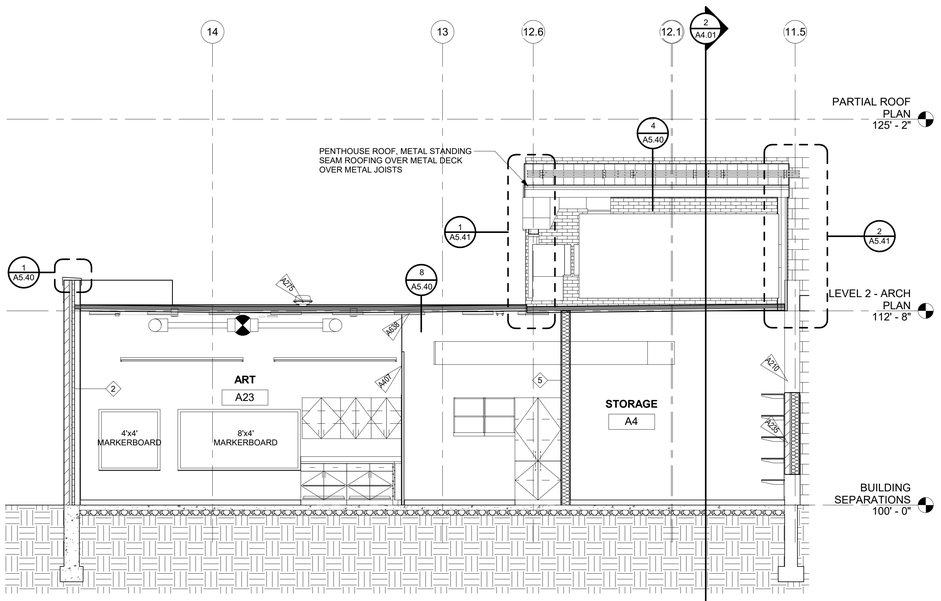


3 A4.01 ART A23 SECTION
1/4" = 1'-0"

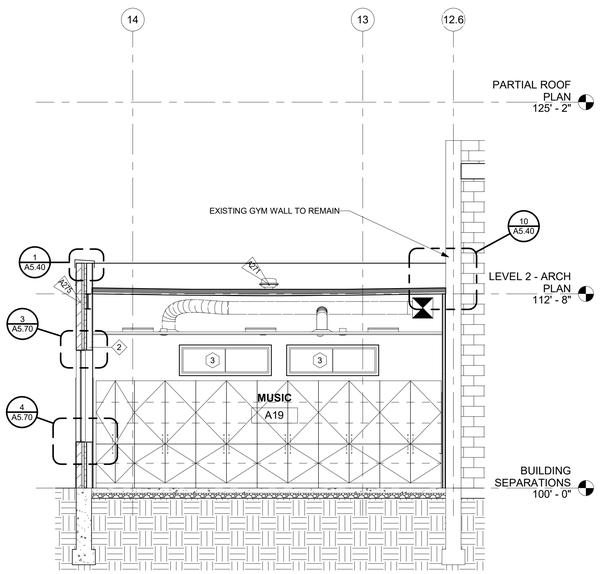


4 A4.01 MUSIC A19 SECTION
1/4" = 1'-0"

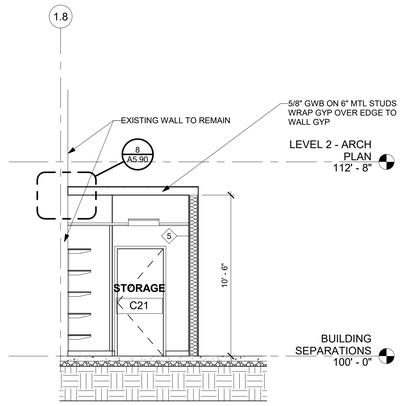


5 A4.01 PRE-K BUMPOUT ROOF
1/4" = 1'-0"

## NOTES:

**EXTERIOR MATERIAL LEGEND**

| | |
|---|---|
| EX-1 | EXISTING BRICK |
| X-1 | NEW BRICK TO MATCH EXISTING |
| ER-1 | EXISTING EPDM |
| R-1 | NEW 90 MIL FULLY ADHERED REINFORCED EPDM |
| CJ | CONTROL JOINT |

KEYNOTE LEGEND

| KEY VALUE | KEYNOTE TEXT |
|---|---|
| A206 | EX CMU WALL. PATCH AS NEEDED AND REPAINT ENTIRE WALL |
| A210 | EXISTING AND NEW BRICK, PREP, PRIME AND PAINT |
| A214 | INSTALL NEW DRYWALL WRAP AROUND STRUCTURAL COLUMN, REF STRUCT |
| A216 | EX. WALL OR COLUMN TO REMAIN, PATCH SECTION WHERE DEMO'D WALL WAS CONNECTED |
| A220 | EXISTING WALL TO REMAIN. PATCH DRYWALL AS NECESSARY, REPAINT ENTIRE WALL AFTER. PATCHING OF WALL ABOVE EXISTING CEILING MAY BE NECESSARY TO EXTEND TO DECK |
| A231 | INSTALL NEW DRINKING FOUNTAIN, REF MEP DWGS |
| A235 | INFILL WALL W/ SIMILAR EX. WALL TYPE 2.1 & SALVAGE BRICK WHERE EXISTING WINDOWS AND DOORS ARE TO BE REMOVED. TOOTH IN BRICK @ JAMBS. |
| A271 | NEW ROOF DRAIN WITH HEAT TRACE, REF MEP DWGS AND DETAIL 6/A5.40 |
| A275 | INSTALL NEW ROOF OVERFLOW DRAIN WITH HEAT TRACE, RE:11/A5.40 |
| A401 | NEW BEAMS IN EXISTING WALL W/2 LAYERS OF TYPE 'X' GWB, REF STRUCTURAL |
| A403 | EXISTING ROOF STRUCTURE TO REMAIN |
| A404 | STANDING SEAM METAL SNOWFENCES |
| A405 | EX MASONRY VENEER WALL |
| A406 | NEW ROOF BEAM BELOW EX ROOF STRUCTURE. RE: STRUC |
| A407 | |
| A407 | CORNER GUARDS/ RE:SPEC AND FINISH PLANS |
| A601 | NEW 2X4 ACOUSTIC CEILING TILE |
| A638 | TECTUM PANEL 2' X 4' APPLIED TO DECK |


TCHBD Record Set
T.A.
05/14/2020



TAB Associates
*The Architectural Balance*
0056 Edwards Village Blvd.
Suite 210
Edwards, CO 81632
(970) 766-1470
fax: (970) 766-1471
email: tab@vail.net
www.tabassociates.com

Civil Engineer
Alpine Engineering, Inc.
970-926-3373
Structural Engineer
JH Structural Engineers
303-318-6539
Mechanical Engineer
BG BuildingWorks, Inc.
970-949-6108
Electrical Engineer
BG BuildingWorks, Inc.
970-949-6108


Seal

# Strawberry Park Elementary
# 39620 Amethyst Drive
Steamboat Springs, CO

Revisions:

| No | Description | Date |
|---|---|---|
| | | |

Issue Dates:
Concept - 11/19/2019
SD's - 1/13/20
DD's - 2/20/20
95% - 03/30/20
CDs - 04/06/20

Sheet Title:
**Building Sections**

Project No:
1935.02

Sheet No:
A4.01

RCRBD Record Set
T.A.

05/14/2020

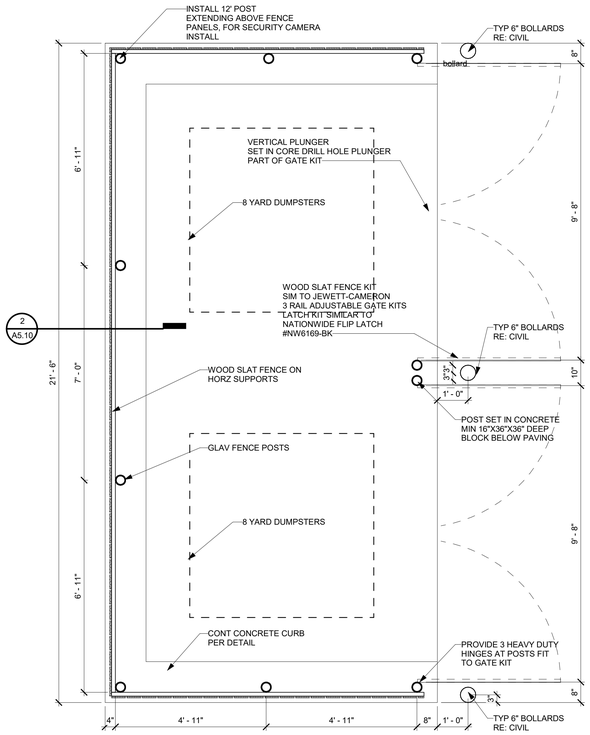


1 A5.10 TRASH ENCLOSURE PLAN
1/2" = 1'-0"

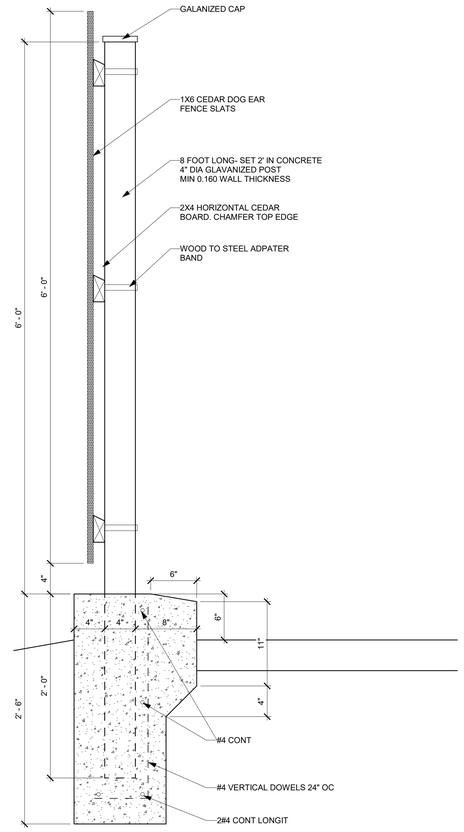


2 A5.10 FENCE SECTION
1 1/2" = 1'-0"


TAB Associates
*The Architectural Balance*
0056 Edwards Village Blvd.
Suite 210
Edwards, CO 81632
(970) 766-1470
fax: (970) 766-1471
email: tab@vail.net
www.tabassociates.com

Civil Engineer
Alpine Engineering, Inc.
970-926-3373
Structural Engineer
JH Structural Engineers
303-318-6539
Mechanical Engineer
BG BuildingWorks, Inc.
970-949-6108
Electrical Engineer
BG BuildingWorks, Inc.
970-949-6108


Seal

# Strawberry Park Elementary
## 39620 Amethyst Drive
### Steamboat Springs, CO

Revisions:

| No | Description | Date |
|---|---|---|
| | | |

Issue Dates:
Concept - 11/19/2019
SD's - 1/13/20
DD's - 2/20/20
95% - 03/30/20
CDs - 04/06/20

Sheet Title:
**Foundation/ Site Details**

Project No:
1935.02

Sheet No:
A5.10

C:\Users\greg\Documents\1935.02 SSSD Strawberry Park Elem_greg@tabassociates.com.rvt

4/2/2020 11:10:42 AM

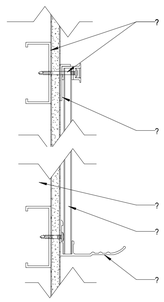

1 A5.20 MARKERBOARD ATTACHMENT
3" = 1'-0"

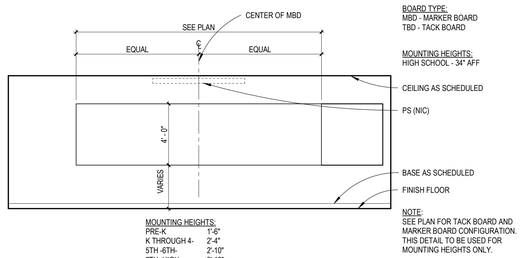


2 A5.20 MBD / TBD / TV ELEVATION
1/4" = 1'-0"

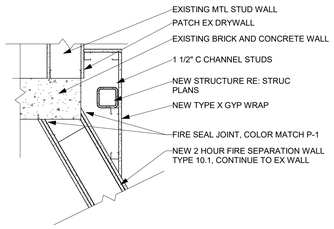


3 A5.20 NORTH ARCADE TO EX WALL
1" = 1'-0"

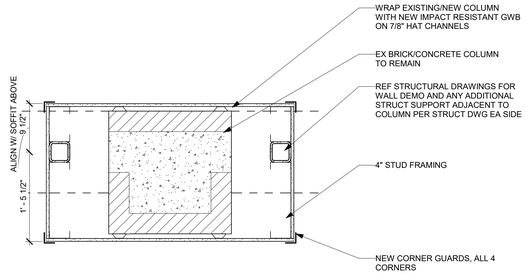


4 A5.20 EX COLUMN ARCADE BUMPOUT
1" = 1'-0"

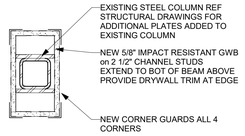


5 A5.20 EX COLUMN IN NEW CAFETERIA
1 1/2" = 1'-0"

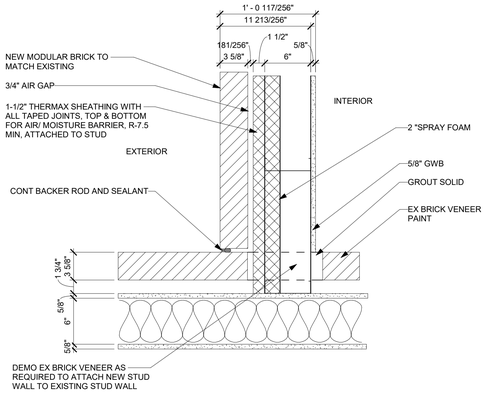


6 A5.20 EX EXT WALL TO NEW EXT WALL
1 1/2" = 1'-0"

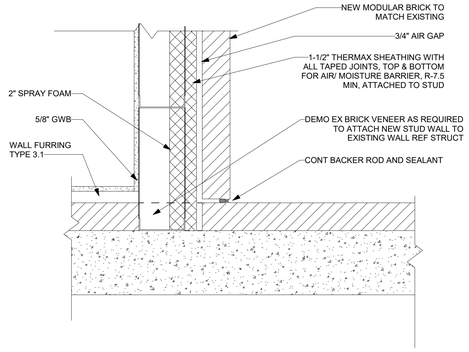


7 A5.20 NEW WALL TO EX MASONRY
1 1/2" = 1'-0"

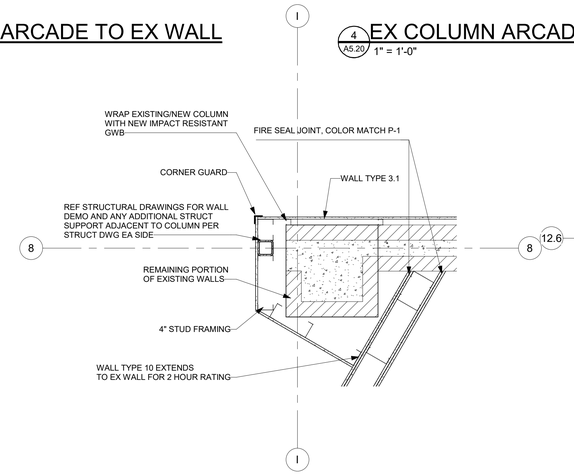


8 A5.20 ARCADE CORNER
3/4" = 1'-0"

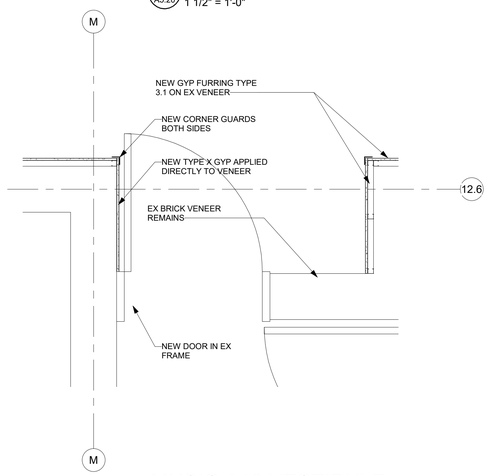


9 A5.20 MUSIC A19 VESTIBULE
3/4" = 1'-0"

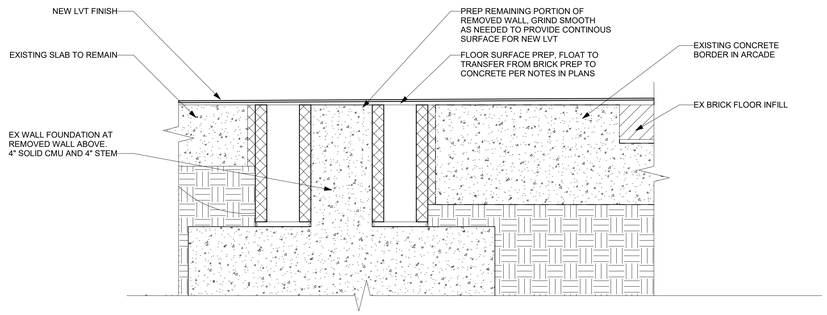


10 A5.20 TRANSITION FROM ARCADE BRICK TO LVT
3" = 1'-0"

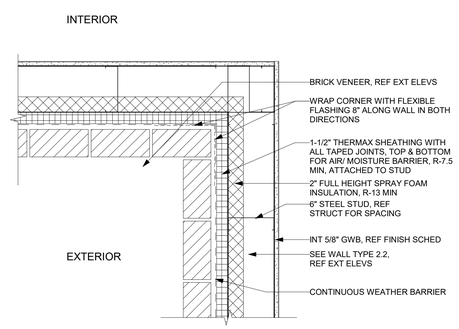


11 A5.20 TYP BRICK INSIDE CORNER
1 1/2" = 1'-0"

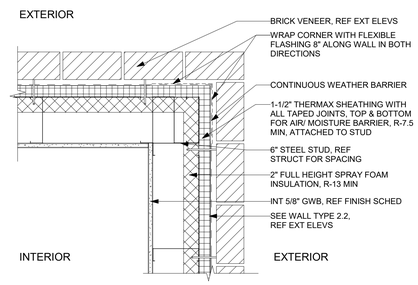


12 A5.20 TYP BRICK OUTSIDE CORNER
1 1/2" = 1'-0"

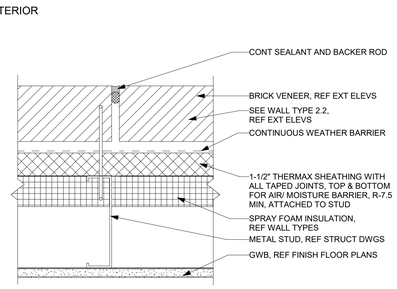


13 A5.20 TYP BRICK CONTROL JOINT
3" = 1'-0"

RCRBD Record Set
T.A.
05/14/2020


TAB Associates
*The Architectural Balance*
0056 Edwards Village Blvd.
Suite 210
Edwards, CO 81632
(970) 766-1470
fax: (970) 766-1471
email: tab@vail.net
www.tabassociates.com

Civil Engineer
Alpine Engineering, Inc.
970-926-3373
Structural Engineer
JH Structural Engineers
303-318-6539
Mechanical Engineer
BG BuildingWorks, Inc.
970-949-6108
Electrical Engineer
BG BuildingWorks, Inc.
970-949-6108


Seal

# Strawberry Park Elementary
## 39620 Amethyst Drive
### Steamboat Springs, CO

Revisions:

| No | Description | Date |
|---|---|---|
| | | |

Issue Dates:
Concept - 11/19/2019
SD's - 1/13/20
DD's - 2/20/20
95% - 03/30/20
CDs - 04/06/20

Sheet Title:
**Plan Details**

Project No:
1935.02

Sheet No:
A5.20

C:\Users\greg\Documents\1935.02 SSSD Strawberry Park Elem_greg@tabassociates.com.rvt

4/2/2020 11:10:45 AM

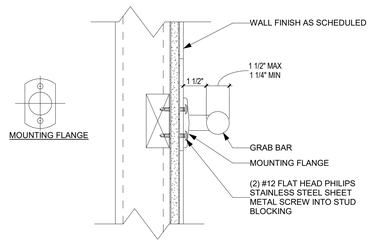


1 A5.30 GRAB BAR ATTACHMENT DETAIL1
3" = 1'-0"

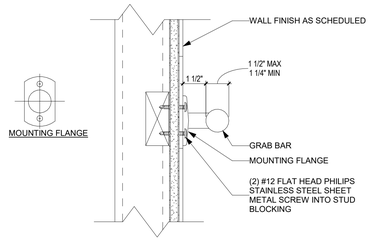


2 A5.30 GRAB BAR ATTACHMENT DETAIL
3" = 1'-0"

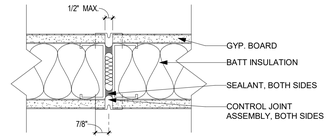


3 A5.30 EXPANSION JOINT @ WALL
3" = 1'-0"

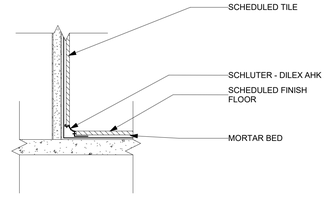


4 A5.30 RESTROOM WALL BASE DETAIL
3" = 1'-0"

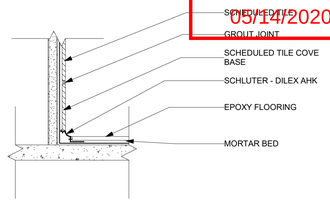


5 A5.30 TILE/EPOXY FLOORING
3" = 1'-0"

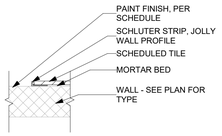


6 A5.30 TILE END - SCHLUTER
3" = 1'-0"

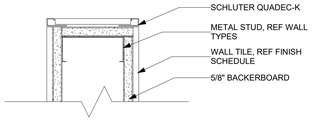


7 A5.30 TILE CORNER EDGE - TYP
3" = 1'-0"

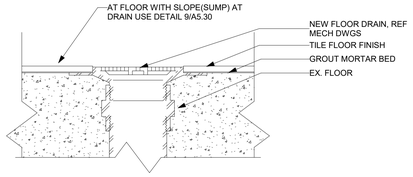


8 A5.30 TYP TILE @ DRAIN SECTION
3" = 1'-0"

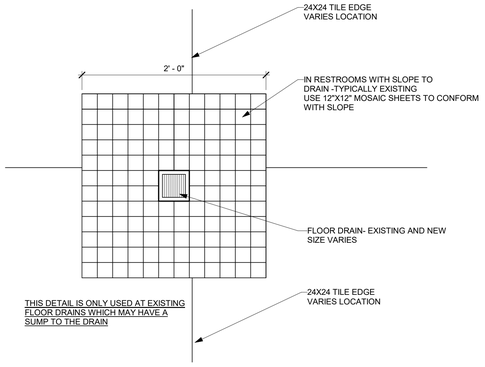


9 A5.30 TYP TILE @ DRAIN PLAN
1 1/2" = 1'-0"

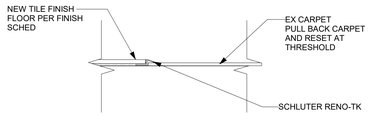


10 A5.30 TYP INTERIOR DOOR THRESHOLD - CPT/TILE
3" = 1'-0"

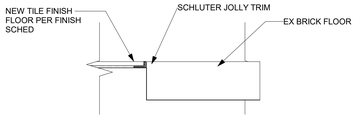


11 A5.30 TYP INTERIOR DOOR THRESHOLD - BRICK/TILE
3" = 1'-0"

INTERIOR INTERIOR INTERIOR

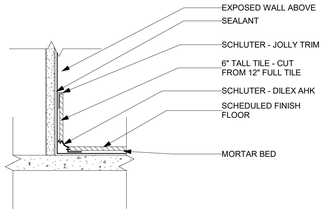


12 A5.30 RESTROOM WALL BASE DETAIL 2
3" = 1'-0"

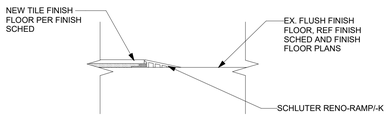


13 A5.30 TYP INTERIOR THRESHOLD - TILE ABOVE
3" = 1'-0"

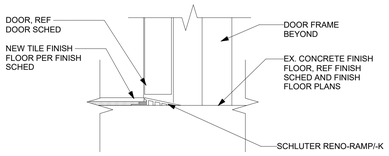


14 A5.30 TYP INTERIOR DOOR THRESHOLD - TILE ABOVE
3" = 1'-0"

RCRBD Record Set
T.A.
05/14/2020

TAB Associates
*The Architectural Balance*
0056 Edwards Village Blvd.
Suite 210
Edwards, CO 81632
(970) 766-1470
fax: (970) 766-1471
email: tab@vail.net
www.tabassociates.com

Civil Engineer
Alpine Engineering, Inc.
970-926-3373
Structural Engineer
JH Structural Engineers
303-318-6539
Mechanical Engineer
BG BuildingWorks, Inc.
970-949-6108
Electrical Engineer
BG BuildingWorks, Inc.
970-949-6108

Seal
STATE OF COLORADO
GREGORY A. WACK
30583
04/06/2020
LICENSED ARCHITECT

# Strawberry Park Elementary
## 39620 Amethyst Drive
Steamboat Springs, CO

Revisions:

| No | Description | Date |
|---|---|---|
| | | |

Issue Dates:
Concept - 11/19/2019
SD's - 1/13/20
DD's - 2/20/20
95% - 03/30/20
CDs - 04/06/20

Sheet Title:
**Wall/ Transition Details**

Project No:
1935.02

Sheet No:
A5.30

C:\Users\greg\Documents\1935.02 SSSD Strawberry Park Elem_greg@tabassociates.com.rvt

4/2/2020 11:10:47 AM

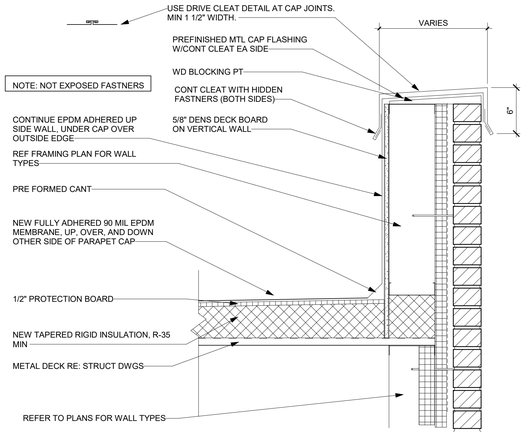


1 A5.40 TYPICAL PARAPET
1 1/2" = 1'-0"

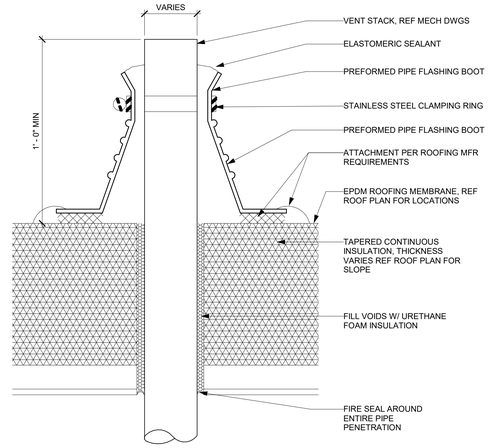


2 A5.40 PIPE PENETRATION AT MEMBRANE ROOFING
3" = 1'-0"

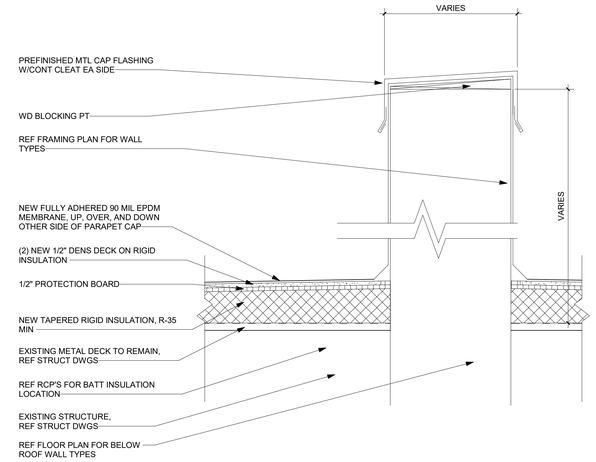


3 A5.40 STANDARD OFFSET PARAPET
1 1/2" = 1'-0"

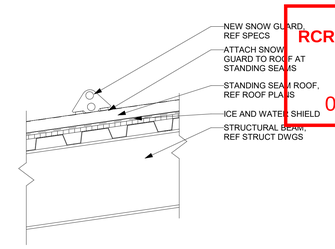


4 A5.40 SNOWGUARD DETAIL
1 1/2" = 1'-0"

NOT USED

5 A5.40 NOT USED
1/8" = 1'-0"

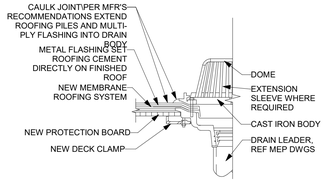


6 A5.40 NEW ROOF DRAIN DETAIL
1 1/2" = 1'-0"

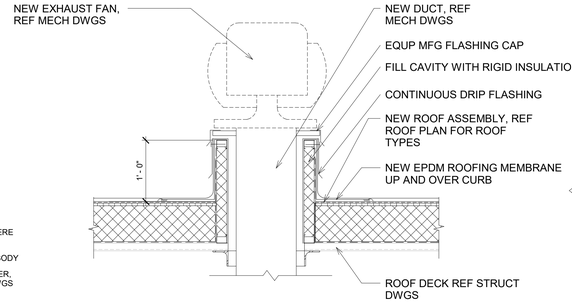


7 A5.40 TYP EXHAUST FAN DETAIL
1" = 1'-0"

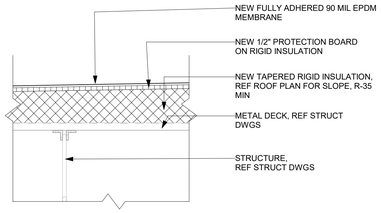


8 A5.40 TYPICAL EPDM ROOF ASSEMBLY
1 1/2" = 1'-0"

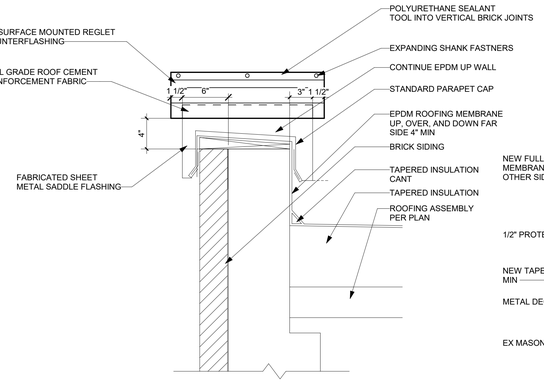


9 A5.40 INTERSECTING PARAPET CAP & BRICK
1 1/2" = 1'-0"

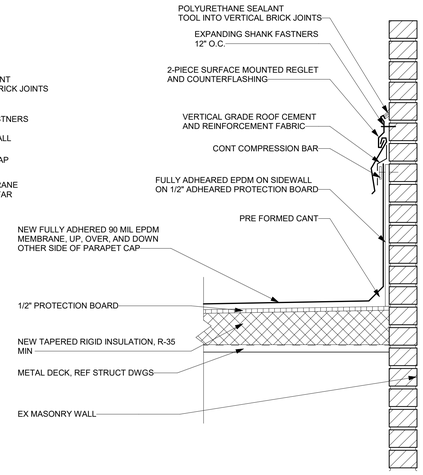


10 A5.40 TYPICAL EPDM TO SIDEWALL
1 1/2" = 1'-0"

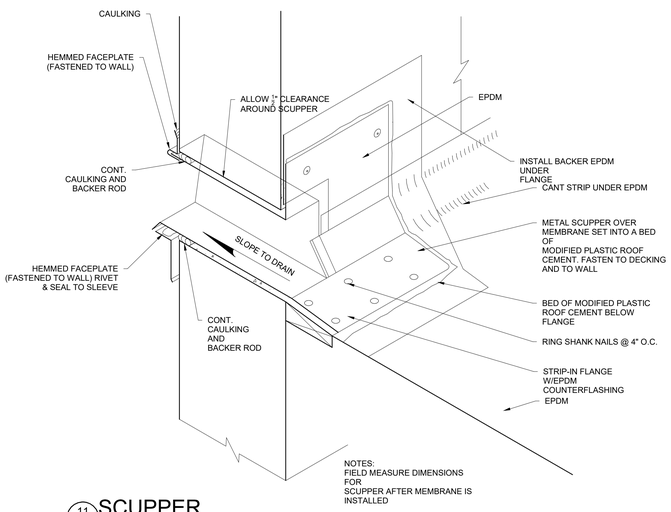


NOTES:
FIELD MEASURE DIMENSIONS FOR SCUPPER AFTER MEMBRANE IS INSTALLED

11 A5.40 SCUPPER
1 1/2" = 1'-0"

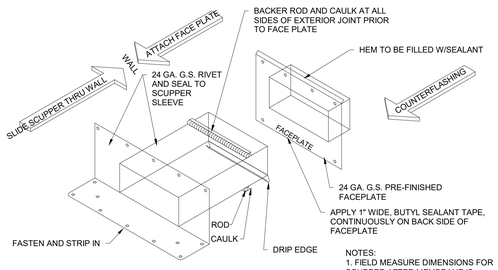


NOTES:
1. FIELD MEASURE DIMENSIONS FOR SCUPPER AFTER MEMBRANE IS INSTALLED

2. SET FLANGE INTO A BED OF WATERBLOCK MASTIC OVER MEMBRANE

3. FASTEN FLANGES 4" O.C. W/TANHEAD SCREWS.

4. INSTALL FACE PLATE ON EXTERIOR, FASTEN AND SEALED IN PLACE.

5. STRIP-IN SCUPPER MEMBRANE OVER BASEFLASHING PER MFR.

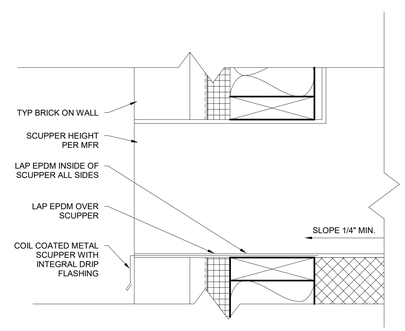


12 A5.40 SCUPPER DETAIL - BRICK
3" = 1'-0"

RCRBD Record Set
T.A.
05/14/2020


TAB Associates
The Architectural Balance
0056 Edwards Village Blvd.
Suite 210
Edwards, CO 81632
(970) 766-1470
fax: (970) 766-1471
email: tab@vail.net
www.tabassociates.com

Civil Engineer
Alpine Engineering, Inc.
970-926-3373
Structural Engineer
JH Structural Engineers
303-318-6539
Mechanical Engineer
BG BuildingWorks, Inc.
970-949-6108
Electrical Engineer
BG BuildingWorks, Inc.
970-949-6108


Seal
STATE OF COLORADO
GREGORY A. WACK
30583
LICENSED ARCHITECT

# Strawberry Park Elementary
## 39620 Amethyst Drive
Steamboat Springs, CO

Revisions:

| No | Description | Date |
|---|---|---|
| | | |

Issue Dates:
Concept - 11/19/2019
SD's - 1/13/20
DD's - 2/20/20
95% - 03/30/20
CDs - 04/06/20

Sheet Title:
**Roof Details**

Project No:
1935.02

Sheet No:
A5.40

C:\Users\greg\Documents\1935.02 SSSD Strawberry Park Elem_greg@tabassociates.com.rvt

4/2/2020 11:10:49 AM

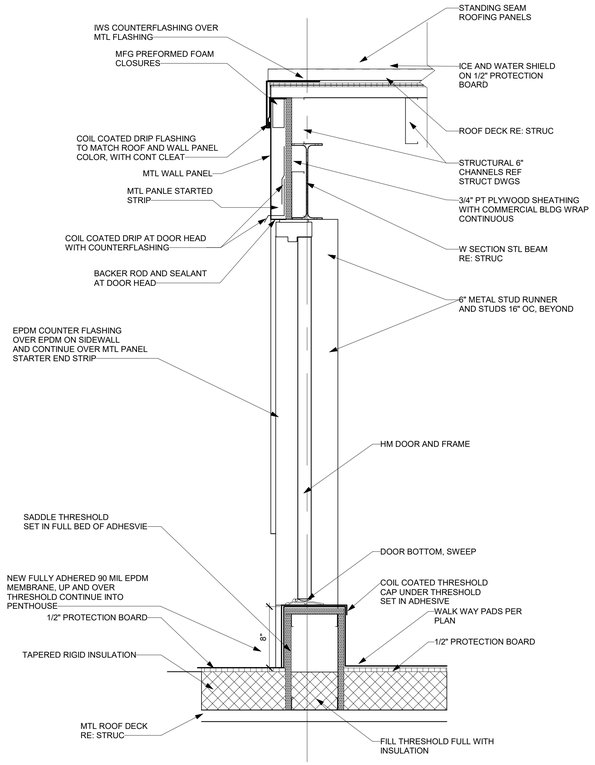


1 A5.41 TYPICAL RAKE DOOR SECTION
1 1/2" = 1'-0"

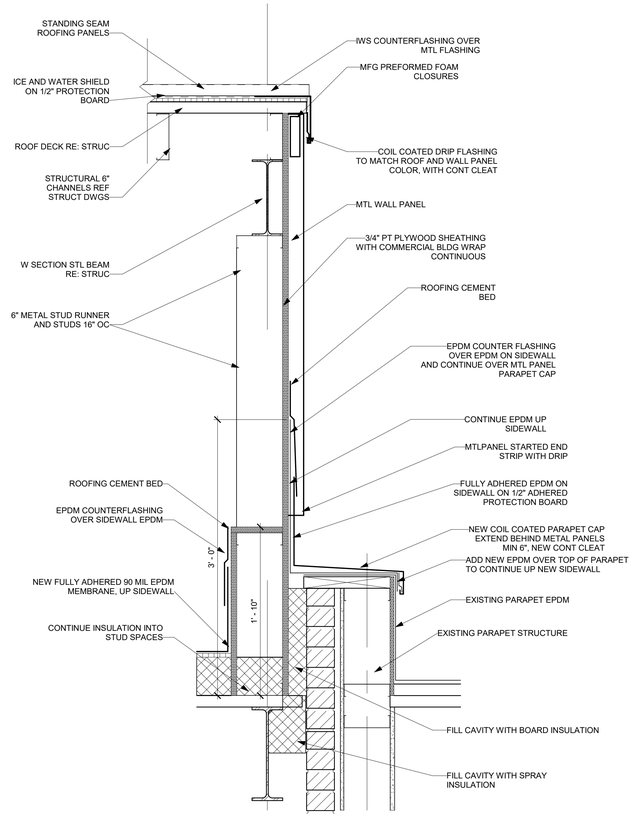


2 A5.41 TYPICAL RAKE WALL SECTION
1 1/2" = 1'-0"

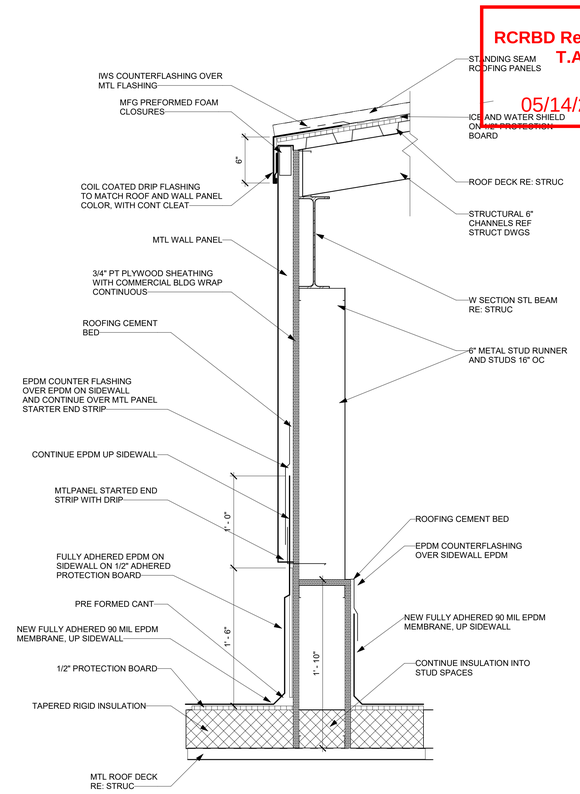


3 A5.41 TYPICAL EAVE WALL SECTION
1 1/2" = 1'-0"

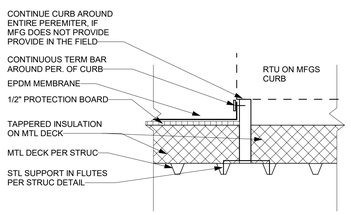


4 A5.41 RTU CURB
1 1/2" = 1'-0"

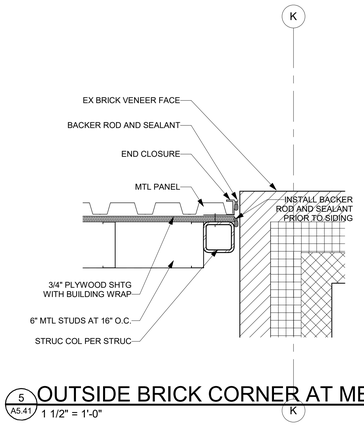


5 A5.41 OUTSIDE BRICK CORNER AT MEZZ
1 1/2" = 1'-0"

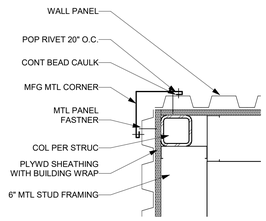


6 A5.41 OUTSIDE CORNER MEZZ
1 1/2" = 1'-0"

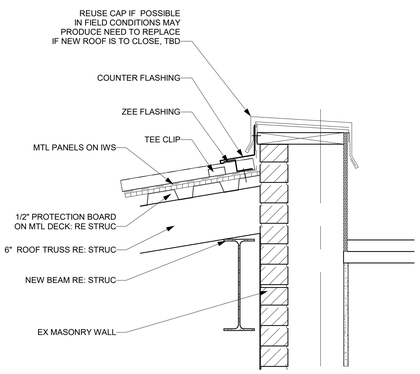


7 A5.41 MTL ROOF AT EX BRICK
1 1/2" = 1'-0"

RCRBD Record Set
T.A.
05/14/2020


TAB Associates
*The Architectural Balance*
0056 Edwards Village Blvd.
Suite 210
Edwards, CO 81632
(970) 766-1470
fax: (970) 766-1471
email: tab@vail.net
www.tabassociates.com

Civil Engineer
Alpine Engineering, Inc.
970-926-3373
Structural Engineer
JH Structural Engineers
303-318-6539
Mechanical Engineer
BG BuildingWorks, Inc.
970-949-6108
Electrical Engineer
BG BuildingWorks, Inc.
970-949-6108


Seal
STATE OF COLORADO
GREGORY A. WACK
30583
LICENSED ARCHITECT

# Strawberry Park Elementary
## 39620 Amethyst Drive
Steamboat Springs, CO

Revisions:

| No | Description | Date |
|---|---|---|
| | | |

Issue Dates:
Concept - 11/19/2019
SD's - 1/13/20
DD's - 2/20/20
95% - 03/30/20
CDs - 04/06/20

Sheet Title:
**Roof Details**

Project No:
1935.02

Sheet No:
A5.41

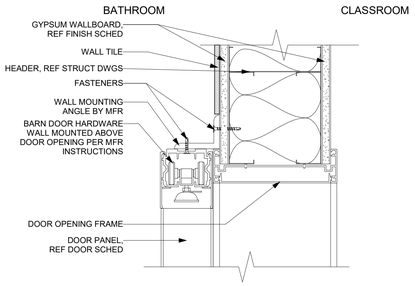


1 A5.60 INT BARN DOOR HEAD DETAIL
3" = 1'-0"

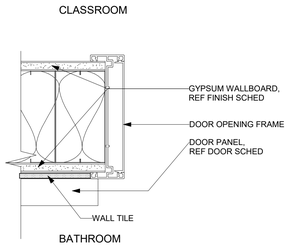


2 A5.60 INT BARN DOOR JAMB DETAIL
3" = 1'-0"

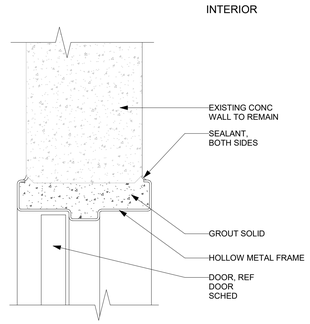


3 A5.60 INTERIOR DOOR HEAD/ JAMB AT CONC
3" = 1'-0"

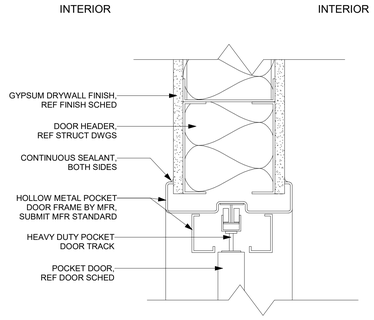


4 A5.60 POCKET DOOR HEAD DETAIL
3" = 1'-0"

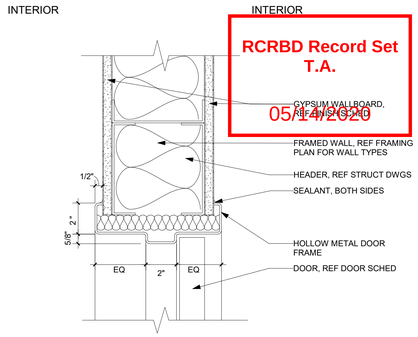


5 A5.60 TYP INT DOOR HEAD/ JAMB DETAIL
3" = 1'-0"

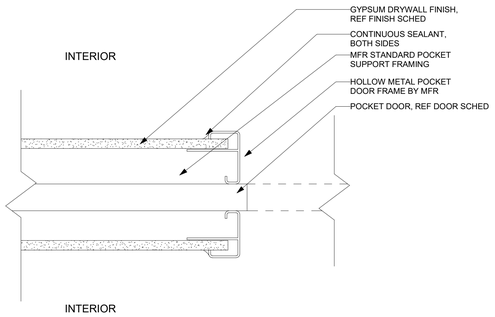


6 A5.60 POCKET DOOR RECIEVING JAMB DETAIL
3" = 1'-0"

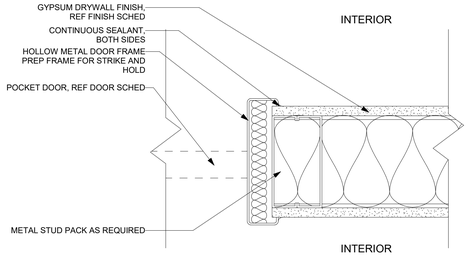


7 A5.60 POCKET DOOR STOPPING JAMB DETAIL
3" = 1'-0"

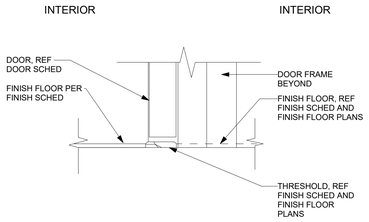


8 A5.60 TYP INTERIOR DOOR THERSHOLD DETAIL
3" = 1'-0"

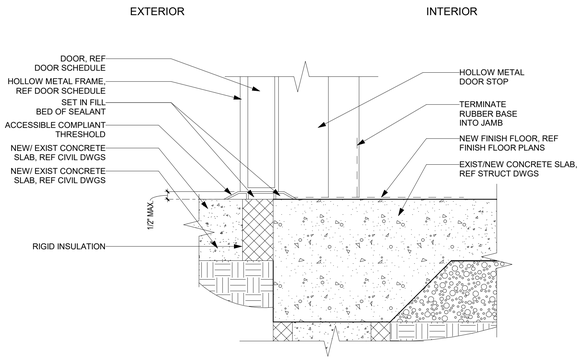


9 A5.60 TYP DOOR SILL
3" = 1'-0"

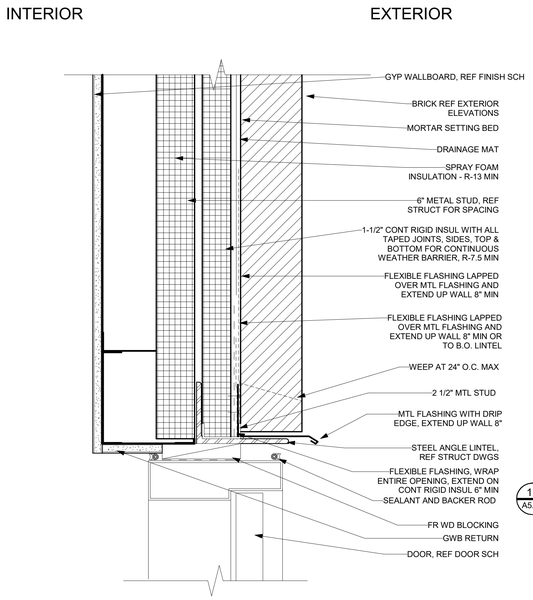


10 A5.60 SF DOOR HEAD AT BRICK
3" = 1'-0"

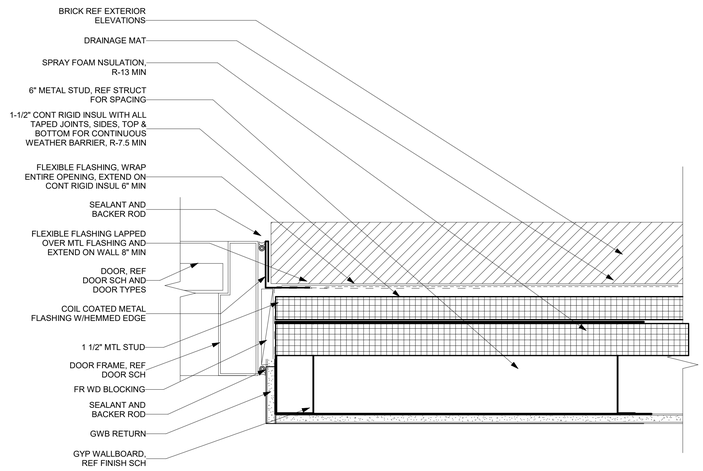


11 A5.60 SF DOOR JAMB AT BRICK
3" = 1'-0"

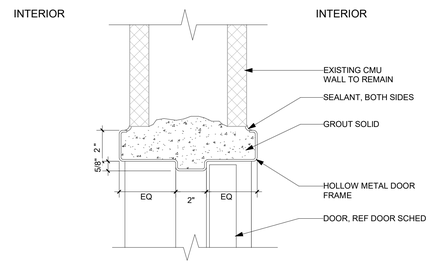


12 A5.60 TYP CMU INTERIOR DOOR HEAD/JAMB DETAIL
3" = 1'-0"

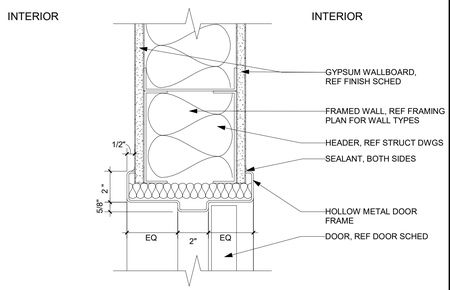


13 A5.60 TYP INT DOOR HEAD/ JAMB DETAIL-2
3" = 1'-0"

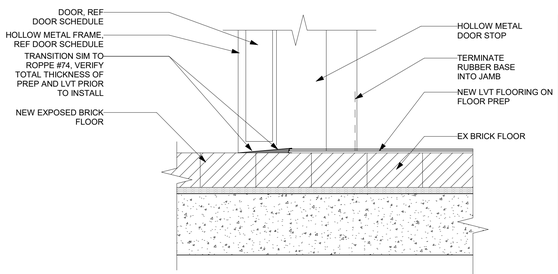


14 A5.60 DOOR THRESHOLD AT ARCADE
3" = 1'-0"

RCRBD Record Set
T.A.
05.14.2020


TAB Associates
*The Architectural Balance*
0056 Edwards Village Blvd.
Suite 210
Edwards, CO 81632
(970) 766-1470
fax: (970) 766-1471
email: tab@vail.net
www.tabassociates.com

Civil Engineer
Alpine Engineering, Inc.
970-926-3373
Structural Engineer
JH Structural Engineers
303-318-6539
Mechanical Engineer
BG BuildingWorks, Inc.
970-949-6108
Electrical Engineer
BG BuildingWorks, Inc.
970-949-6108


Seal
STATE OF COLORADO
GREGORY A. WACK
305837
04/06/2020
LICENSED ARCHITECT

# Strawberry Park Elementary
## 39620 Amethyst Drive
Steamboat Springs, CO

Revisions:

| No | Description | Date |
|---|---|---|
| | | |

Issue Dates:
Concept - 11/19/2019
SD's - 1/13/20
DD's - 2/20/20
95% - 03/30/20
CDs - 04/06/20

Sheet Title:
**Door Details**

Project No:
1935.02

Sheet No:
A5.60

C:\Users\greg\Documents\1935.02 SSSD Strawberry Park Elem_greg@tabassociates.com.rvt

4/2/2020 11:10:54 AM

RCRBD Record Set
T.A.

05/14/2020

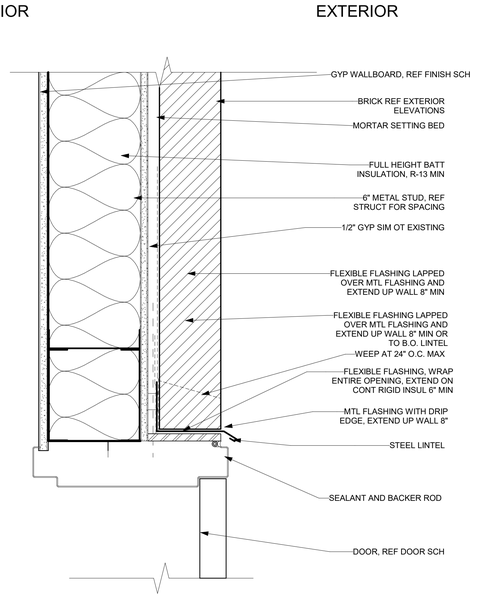


1 A5.61 HM EXT DOOR H/J AT EX WALL
3" = 1'-0"

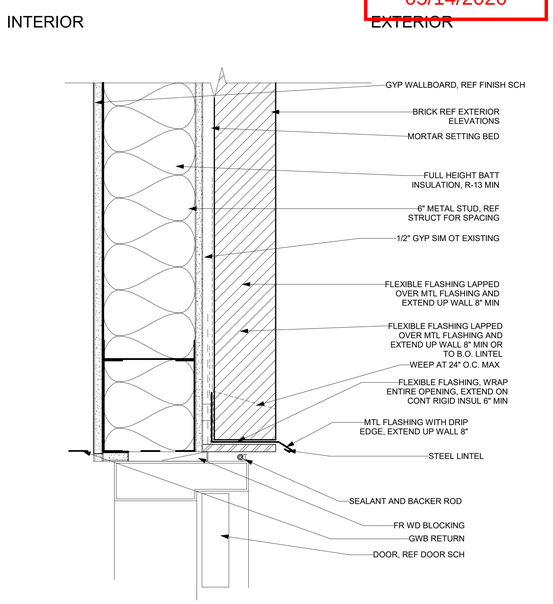


2 A5.61 SF DOOR H/J AT EX WALL
3" = 1'-0"


TAB Associates
*The Architectural Balance*
0056 Edwards Village Blvd.
Suite 210
Edwards, CO 81632
(970) 766-1470
fax: (970) 766-1471
email: tab@vail.net
www.tabassociates.com

Civil Engineer
Alpine Engineering, Inc.
970-926-3373
Structural Engineer
JH Structural Engineers
303-318-6539
Mechanical Engineer
BG BuildingWorks, Inc.
970-949-6108
Electrical Engineer
BG BuildingWorks, Inc.
970-949-6108


Seal

# Strawberry Park Elementary
## 39620 Amethyst Drive
Steamboat Springs, CO

Revisions:

| No | Description | Date |
|---|---|---|
| | | |

Issue Dates:
Concept - 11/19/2019
SD's - 1/13/20
DD's - 2/20/20
95% - 03/30/20
CDs - 04/06/20

Sheet Title:
**Door Details**

Project No:
1935.02

Sheet No:
A5.61


C:\Users\greg\Documents\1935.02 SSSD Strawberry Park Elem_greg@tabassociates.com.rvt
4/2/2020 11:10:54 AM

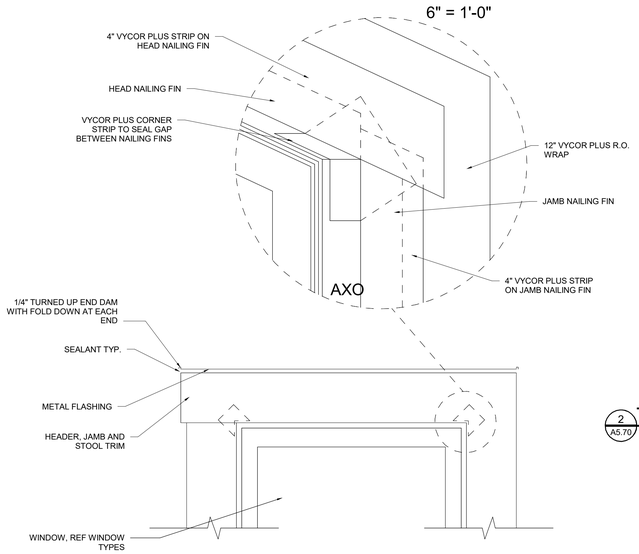


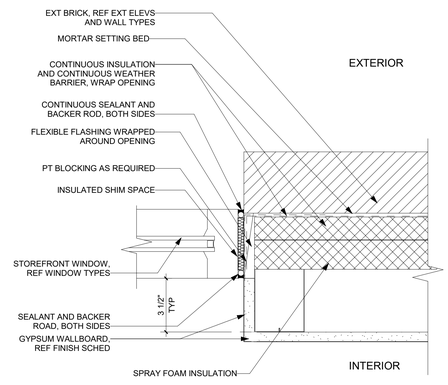


2 A5.70 TYP WINDOW JAMB AT BRICK
3" = 1'-0"

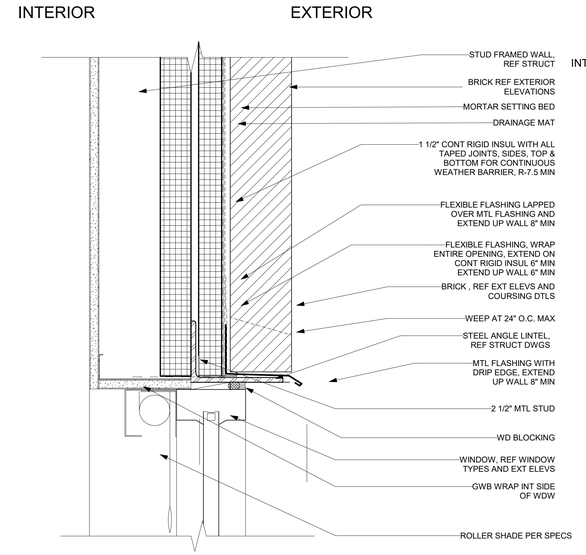


3 A5.70 SF WINDOW HEAD AT BRICK ON MTL
3" = 1'-0"

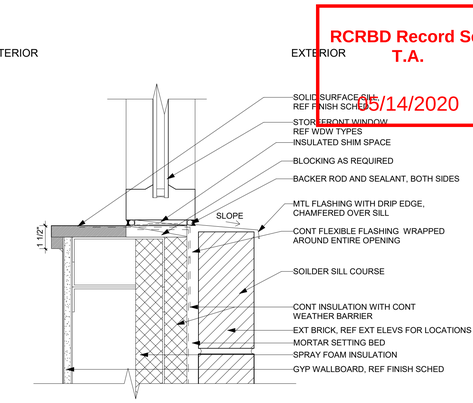


4 A5.70 TYP WINDOW SILL AT BRICK
3" = 1'-0"

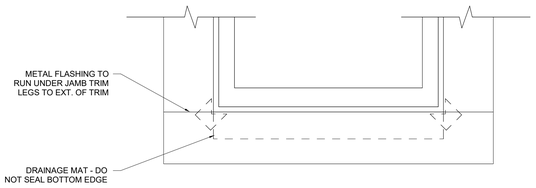


1 A5.70 TYP WINDOW FLASHING DETAIL
1 1/2" = 1'-0"

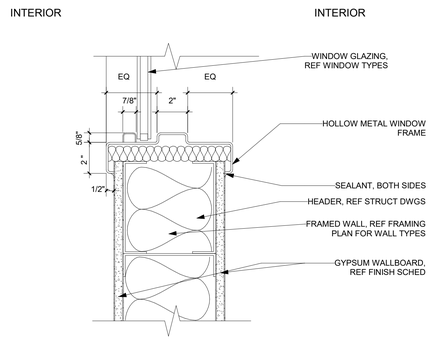


6 A5.70 TYP INTERIOR WINDOW SILL DETAIL
3" = 1'-0"

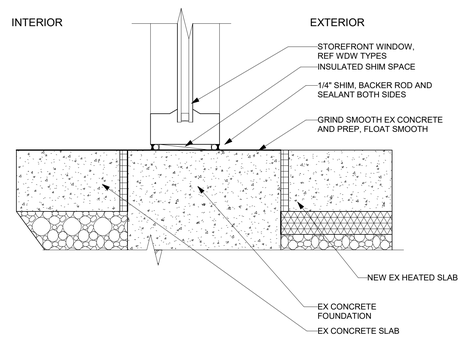


7 A5.70 SF AT FLOOR
3" = 1'-0"

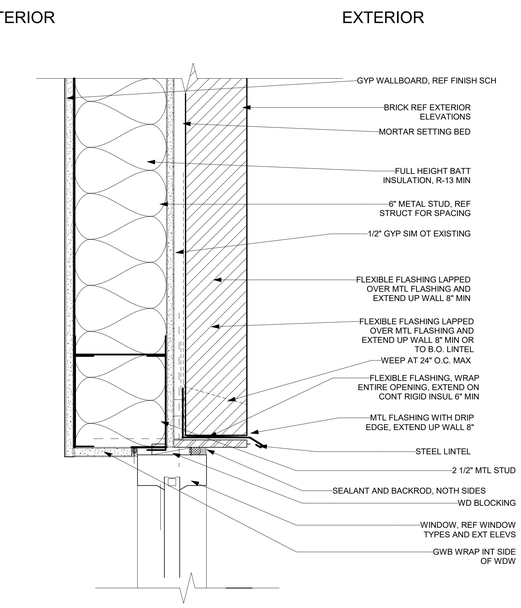


8 A5.70 SF AT H/J AT EX WALL
3" = 1'-0"

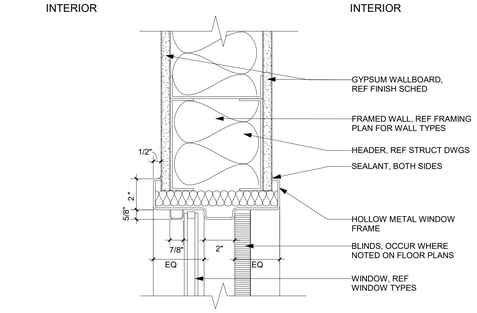


5 A5.70 TYP INTERIOR WINDOW HEAD/ JAMB DETAIL
3" = 1'-0"

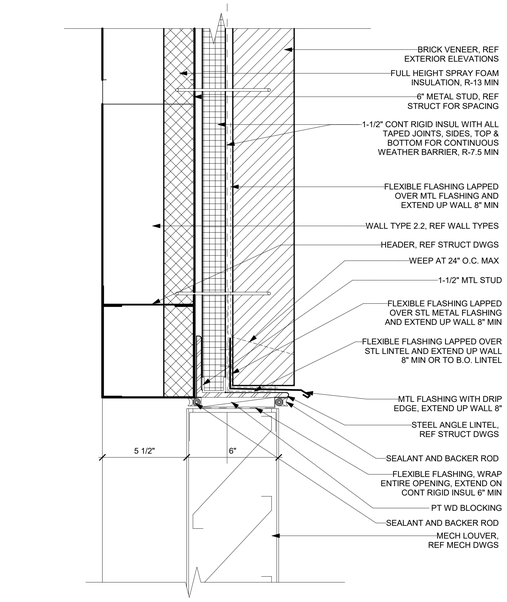


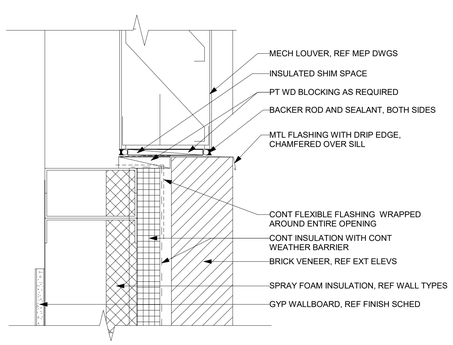


9 A5.70 TYP MECH LOUVER SILL AT BRICK
3" = 1'-0"

10 A5.70 TYP MECH LOUVER HEAD AT BRICK
3" = 1'-0"

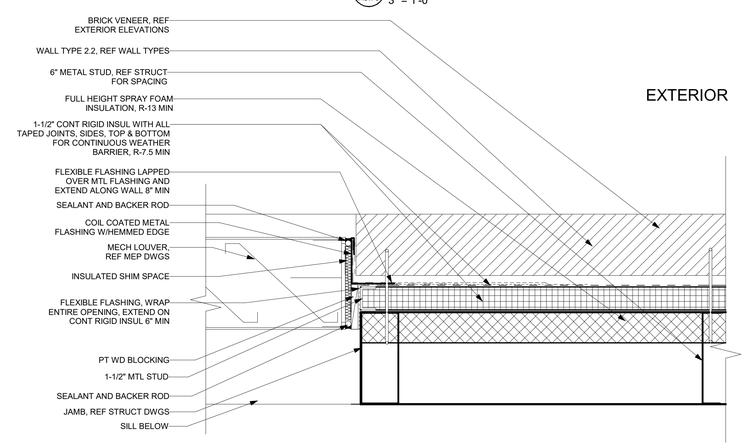


11 A5.70 TYP MECH LOUVER JAMB AT BRICK
3" = 1'-0"

RCRBD Record Set
T.A.
05/14/2020


TAB Associates
*The Architectural Balance*
0056 Edwards Village Blvd.
Suite 210
Edwards, CO 81632
(970) 766-1470
fax: (970) 766-1471
email: tab@vail.net
www.tabassociates.com

Civil Engineer
Alpine Engineering, Inc.
970-926-3373
Structural Engineer
JH Structural Engineers
303-318-6539
Mechanical Engineer
BG BuildingWorks, Inc.
970-949-6108
Electrical Engineer
BG BuildingWorks, Inc.
970-949-6108


Seal
STATE OF COLORADO
GREGORY A. WACK
305837
LICENSED ARCHITECT
04/06/2020

# Strawberry Park Elementary
## 39620 Amethyst Drive
### Steamboat Springs, CO

Revisions:

| No | Description | Date |
|---|---|---|
| | | |

Issue Dates:
Concept - 11/19/2019
SD's - 1/13/20
DD's - 2/20/20
95% - 03/30/20
CDs - 04/06/20

Sheet Title:
**Window Details**

Project No:
1935.02

Sheet No:
A5.70

C:\Users\greg\Documents\1935.02 SSSD Strawberry Park Elem_greg@tabassociates.com.rvt

4/2/2020 11:10:57 AM

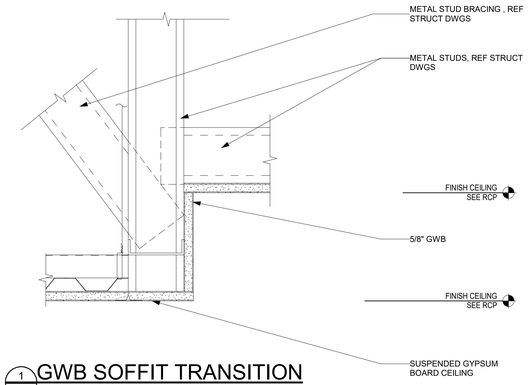


1 A5.90 GWB SOFFIT TRANSITION
3" = 1'-0"

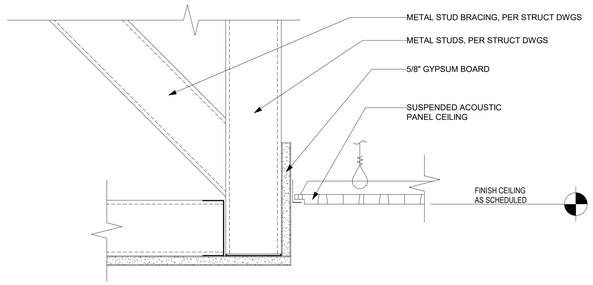


2 A5.90 GWB TO APC
3" = 1'-0"

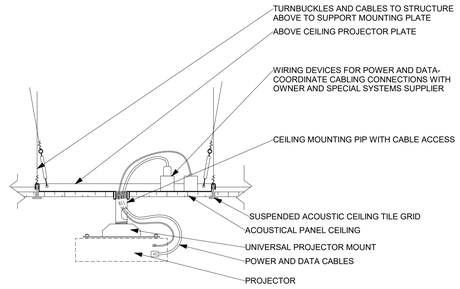


3 A5.90 PROJECTOR MOUNT
1 1/2" = 1'-0"

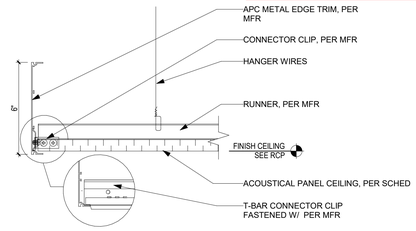


4 A5.90 APC CLOUD
3" = 1'-0"

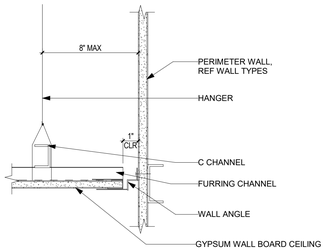


5 A5.90 GWB CEILING AT PERIMETER WALL
3" = 1'-0"

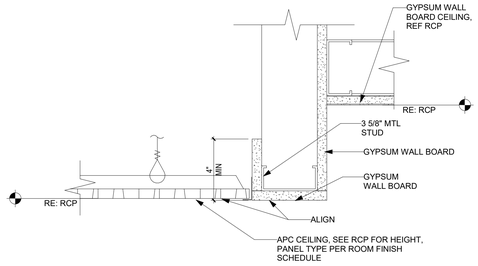


6 A5.90 APC TO GWB
3" = 1'-0"

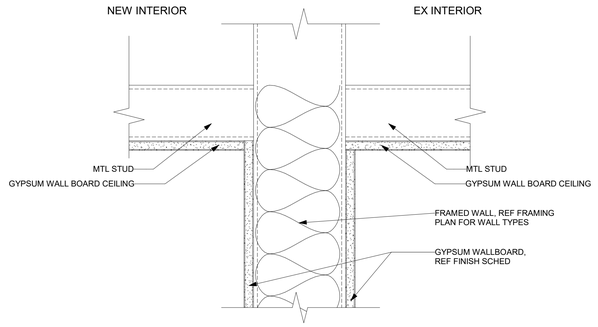


7 A5.90 SOFFIT AT NEW & EXISTING
3" = 1'-0"

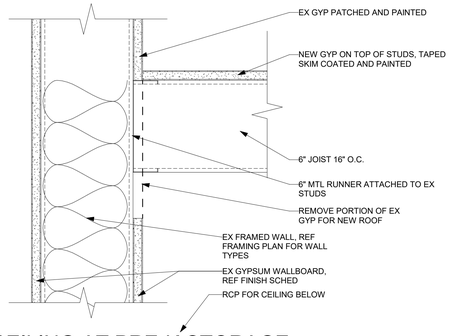


8 A5.90 CEILING AT PRE-K STORAGE
3" = 1'-0"

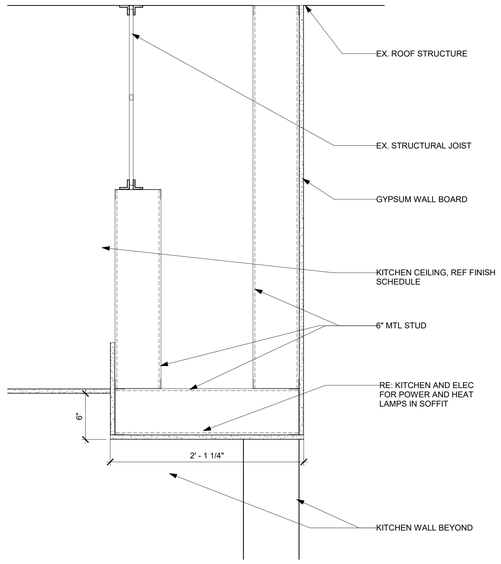


10 A5.90 KITCHEN SOFFIT
1 1/2" = 1'-0"

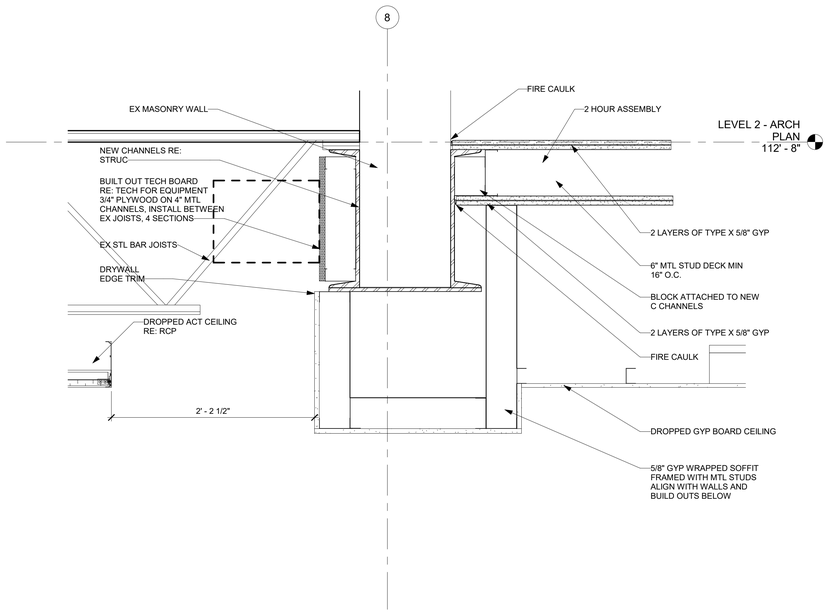


9 A5.90 ARCADE/ SOFFIT ROOF
1 1/2" = 1'-0"

RCRBD Record Set
T.A.
05/14/2020


TAB Associates
*The Architectural Balance*
0056 Edwards Village Blvd.
Suite 210
Edwards, CO 81632
(970) 766-1470
fax: (970) 764-1471
email: tab@vail.net
www.tabassociates.com

Civil Engineer
Alpine Engineering, Inc.
970-926-3373
Structural Engineer
JH Structural Engineers
303-318-6539
Mechanical Engineer
BG BuildingWorks, Inc.
970-949-6108
Electrical Engineer
BG BuildingWorks, Inc.
970-949-6108


Seal

STATE OF COLORADO
GREGORY R. WICK
305837
04/06/2020
LICENSED ARCHITECT

# Strawberry Park Elementary
## 39620 Amethyst Drive
Steamboat Springs, CO

| Revisions: | | |
|---|---|---|
| No | Description | Date |

Issue Dates:
Concept - 11/19/2019
SD's - 1/13/20
DD's - 2/20/20
95% - 03/30/20
CDs - 04/06/20

Sheet Title:
**Ceiling Details**

Project No:
1935.02

Sheet No:
A5.90


C:\Users\greg\Documents\1935.02 SSSD Strawberry Park Elem_greg@tabassociates.com.rvt
4/2/2020 11:10:59 AM

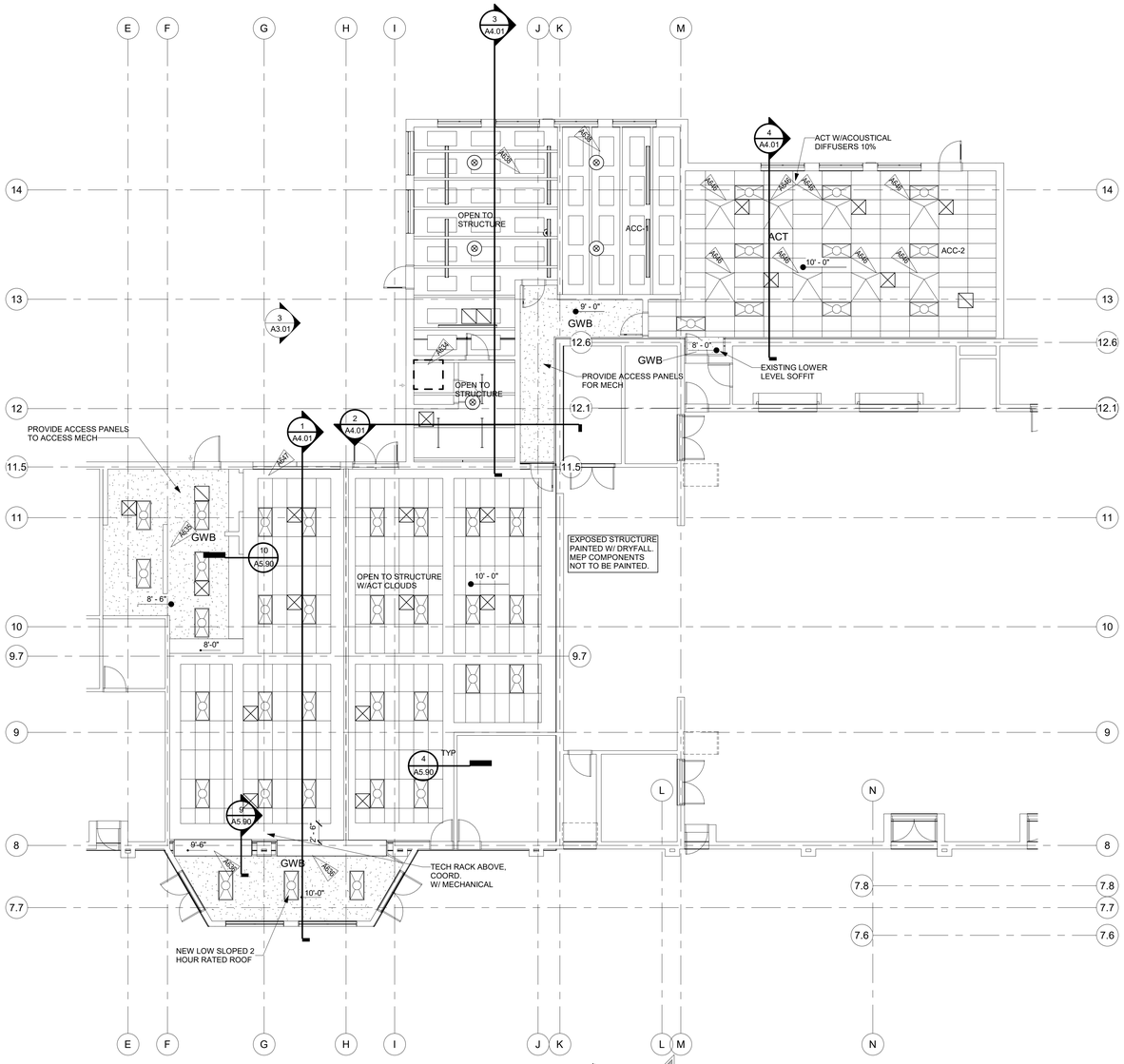


1 A6.01 BUILDING SEPARATIONS
1/8" = 1'-0"

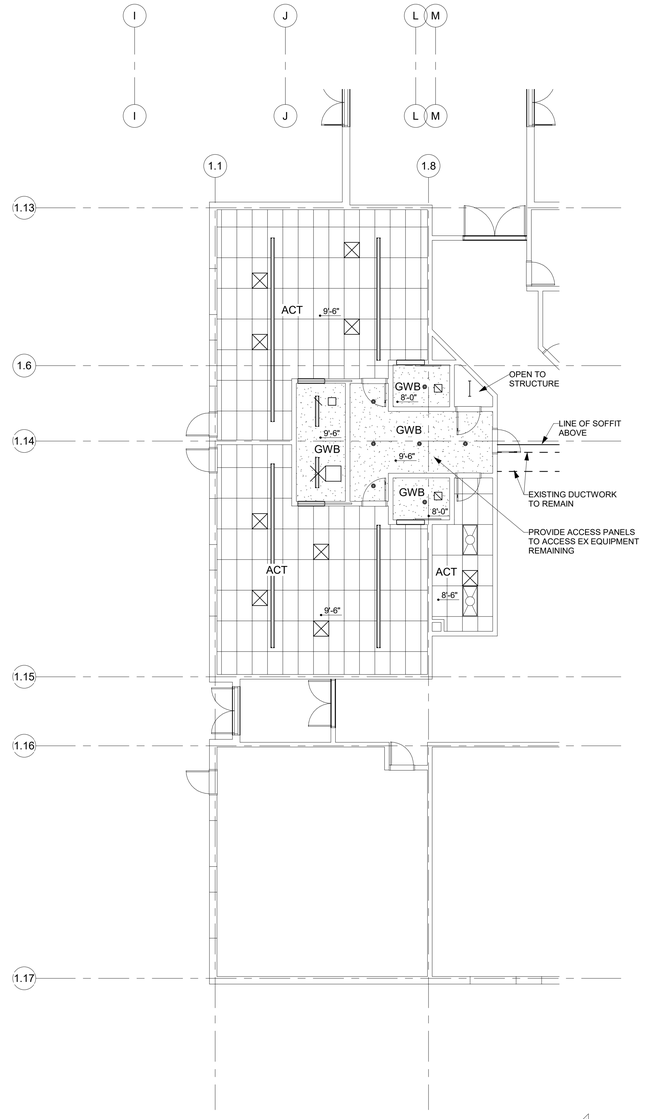


2 A6.01 LEVEL 1 - PARTIAL AREA B PLAN
1/8" = 1'-0"

KEY PLAN

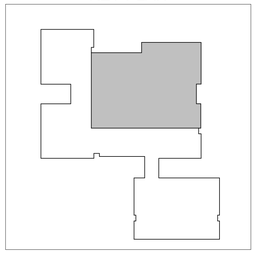

KEY PLAN

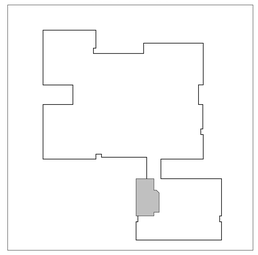

## NOTES:

RCRBD Record Set
05/14/2020

**RCP NOTES**

1. REFER TO FIRE PROTECTION DRAWINGS FOR LOCATIONS OF FIRE SPRINKLER HEADS. CENTER FIRE SPRINKLER HEADS BOTH DIRECTIONS IN CEILING TILES.
2. SUBMIT LAYOUT OF AL LGYPSUM BOARD CEILING CONTROL JOINTS PRIOR TO INSTALL.
3. ALL CEILINGS SHALL BE AS NOTED ON PLANS.
4. SEE MECHANICAL AND ELECTRICAL DRAWINGS FOR MOUNTING LOCATIONS OF ITEMS WHERE NO CEILINGS IS REQUIRED OR INDICATED.
5. LIGHTS, DIFFUSERS, EXIT SIGNS, SMOKE DETECTORS, AND FIRE ALARMS SPEAKERS/STROBES SHALL BE CENTERED IN THE CEILING TILES IN WHICH THEY OCCUR, UNLESS NOTED OTHERWISE.
6. CENTER ALL CEILING GRIDS IN EACH ROOM OR SPACE UNLESS OTHERWISE INDICATED WITH A GRID ORIGIN OR DIMENSION.
7. REFER TO ELECTRICAL AND MECHANICAL DRAWINGS FOR NEW LIGHTS AND REGISTERS.

## REFLECTED CEILING PLAN LEGEND

- APC-1 TYPICAL, U.N.O. 2x4 ACOUSTICAL LAY-IN CEILING (HIGH NRC PANEL) HEIGHT 9'-6" AFF U.N.O.
- GYPSUM WALLBOARD CEILING HEIGHT 9'-6" AFF U.N.O.
- APC-2 SIM TO APC-1 2X4 ACOUSTICAL LAY-IN CEILING WITH 6" AXOM TRIM (HIGH NRC PANEL) HEIGHT 9'-6" AFF U.N.O.
- 4X4 PYRAMIDAL DIFFUSER
- RECESSED TROFFER, 2'x 4', 2'x 4', AND 1' x 4', REF MEP DWGS AND RCPS FOR SIZES
- DOWNLIGHT-RECESSED CAN 6", REF MEP DWGS
- LINEAR SLOT DOWNLIGHT-STRIP 48" RECESSED AND PENDANT, REF MEP DWGS
- WALL MOUNTED LIGHT, REF MEP DWGS AND ELEVS FOR LOCATIONS
- LED, CHAIN HUNG LIGHT STRIP, REF MEP DWGS
- MECH SUPPLY GRILLE , REF MEP DWGS
- MECH RETURN GRILLE , REF MEP DWGS
- EF — EXHAUST FAN, REF MEP DWGS
- PENDANT LIGHT , REF MEP DWGS
- S — CEILING MOUNTED SPEAKER, REF MEP DWGS
- F — CEILING MOUNTED FIRE ALARM, REF LIFE SAFETY AND MEP DWGS
- S — SMOKE DETECTOR, REF LIFE SAFETY AND MEP DWGS
- F — WALL MOUNTED FIRE ALARM, REF LIFE SAFETY AND MEP DWGS
- S — WALL MOUNTED SPEAKER, REF MEP DWGS

KEYNOTE LEGEND

| KEY VALUE | KEYNOTE TEXT |
|---|---|
| | |
| A634 | REINSTALLED KILN HOOD |
| A635 | NEW KITCHEN HOOD, REF KITCHEN DRAWINGS |
| A636 | EXPOSED STEEL STRUCTURAL BEAM, PAINT FLAT BLACK |
| A638 | TECTUM PANEL 2' X 4' APPLIED TO DECK |
| A646 | SOUND PYRAMINDAL PANEL 4'X4' |
| A647 | 2'X2' ACCESS HATCH, LOCATION TBD PER MECH. |
| ACT | |
| GWB | |


TAB Associates
*The Architectural Balance*
0056 Edwards Village Blvd.
Suite 210
Edwards, CO 81632
(970) 766-1470
fax: (970) 766-1471
email: tab@vail.net
www.tabassociates.com

Civil Engineer
Alpine Engineering, Inc.
970-926-3373
Structural Engineer
JH Structural Engineers
303-318-6539
Mechanical Engineer
BG BuildingWorks, Inc.
970-949-6108
Electrical Engineer
BG BuildingWorks, Inc.
970-949-6108


Seal

# Strawberry Park Elementary
# 39620 Amethyst Drive
Steamboat Springs, CO

Revisions:

| No | Description | Date |
|---|---|---|
| | | |

Issue Dates:
Concept - 11/19/2019
SD's - 1/13/20
DD's - 2/20/20
95% - 03/30/20
CDs - 04/06/20

Sheet Title:

**Reflected Ceiling Plan**

Project No:
1935.02

Sheet No:
A6.01

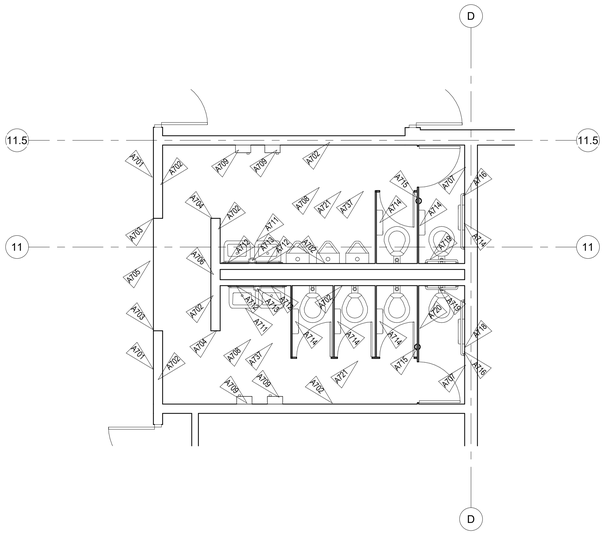

1 A7.01 RESTROOMS-A34-A35
1/4" = 1'-0"

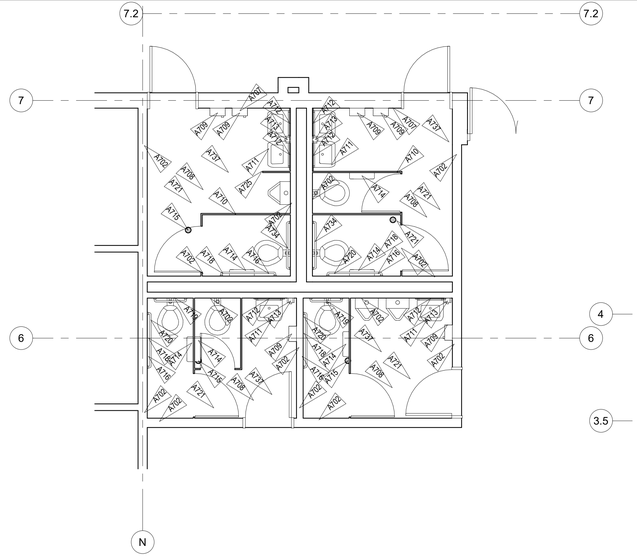

2 A7.01 RESTROOMS-B14-B15
1/4" = 1'-0"

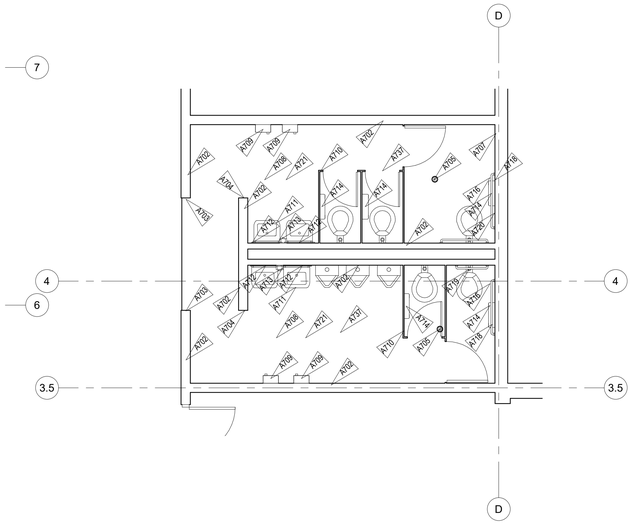

3 A7.01 RESTROOMS-B40-B41
1/4" = 1'-0"

SEE FINISH FLOOR PLANS FOR TILE LAYOUTS

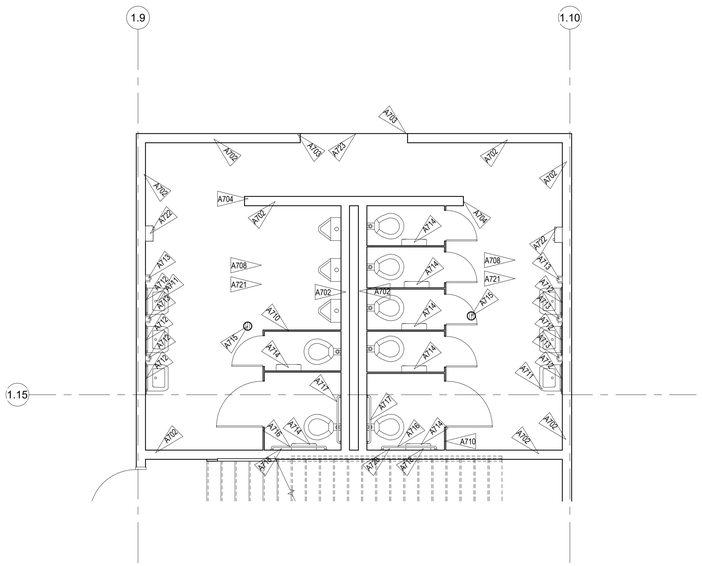

4 A7.01 RESTROOMS-C19-C20
1/4" = 1'-0"

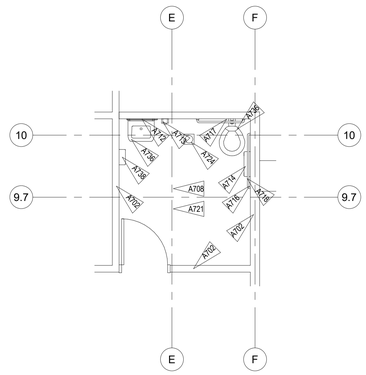

5 A7.01 RESTROOM A22
1/4" = 1'-0"

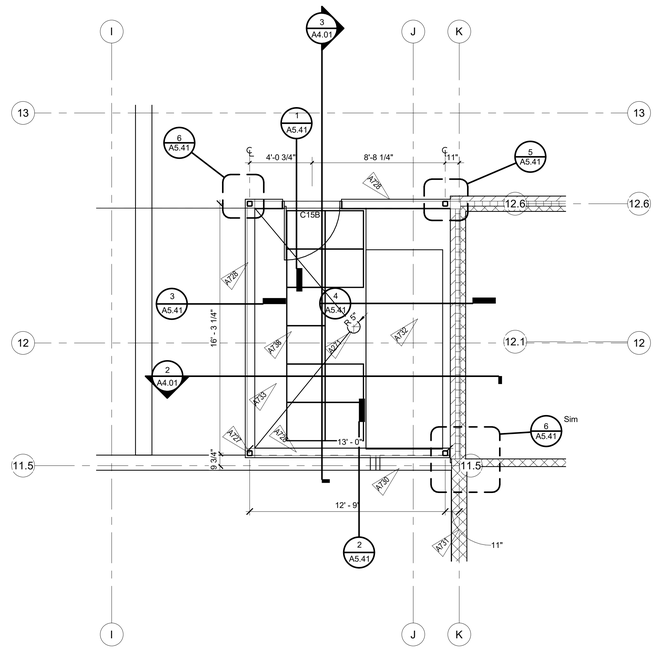

6 A7.01 ROOF MECHANICAL PLAN
1/4" = 1'-0"

## NOTES:

| KEYNOTE LEGEND | |
|---|---|
| KEY VALUE | KEYNOTE TEXT |
| A271 | NEW ROOF DRAIN WITH HEAT TRACE, RE: MEP DWGS AND DETAIL 6/A5.40 |
| A701 | EXISTING DRYWALL NO CHANGE |
| A702 | FULL HEIGHT TILE. RE: DETAIL 7/A5.30 |
| A703 | FULL HEIGHT TILE ON END FACE. TERMINATE TILE ON OUTSIDE EDGE. RE: SIM DETAIL 7/A5.30 |
| A704 | FULL HEIGHT TILE ON END FACE. RE: DETAIL 7/A5.30 |
| A705 | CONTINUE FLOOR TILE TO EX BRICK. RE:11/A5.30 |
| A706 | EXISTING HOSE BIB. RESET ON NEW TILE SURFACE |
| A707 | EXISTING CMU, PAINT (EPOXY PAINT), INSTALL TILE BASE PER DETAIL 12/A5.30 |
| A708 | PATCH AND PAINT EXISTING GYP BD CEILING (EPOXY PAINT) |
| A709 | INSTALL NEW SURFACE MOUNTED ELECTRIC HANDDRYER IN APPROXIMATE LOCATION OF REMOVED HD. PATCH OLD RECESSED LOCATION PRIOR TO TILE WORK |
| A710 | INSTALL NEW BATHROOM PARTITIONS. OVERHEAD BRACED PER SPECS. PROVIDE ONSITE MEASURMENTS TO CONFIRM EXACT SIZES PER EACH RESTROOM. NEW PARTITIONS TO MATCH EXISTING LAYOUT |
| A711 | EXISTING FIXTURES WITH NEW FAUCETS AND FLUSH VALVES. RE MEP. INSTALL NEW PIPE PROTECTION COVERS AT EXPOSED SINK PIPES |
| A712 | INSTALL NEW WALL MIRROR PER SPECS |
| A713 | GC TO INSTALL OWNER SUPPLIED SOAP DISPENSER |
| A714 | GC TO INSTALL OWNER SUPPLIED TOILET PAPER DISPENSER |
| A715 | EXISTING FLOOR DRAIN - INSTALL TILE PER DETAILS 8-9/A5.30 |
| A716 | INSTALL SIDE WALL GRAB BAR GB-2- 42" |
| A717 | INSTALL BACK WALL GRAB BAR GB-1- 36" |
| A718 | INSTALL SIDE WALL VERTICAL GRAB BAR GB-3- 18". IN DRYWALL LOCATIONS ADDITIONAL BACKING MAY BE NECESSARY |
| A719 | INSTALL BACK WALL GRAB BAR GB-2- 24" |
| A720 | INSTALL OWNER PROVIDED SANITARY NAPKIN DISPOSAL UNIT |
| A721 | INSTALL NEW FLOOR TILE |
| A722 | INSTALL NEW WALL MOUNTED ELECTRIC HANDDRYER ON NEW WALL TILE IN SIMILAR LOCATION TO REMOVED HD |
| A723 | EXTEND NEW FLOOR TILE TO EXISTING CARPET. RE: DETAIL 10/A5.30 |
| A724 | INSTALL NEW FLOOR DRAIN FLUSH WITH TOP OF TILE PER DETAIL |
| A725 | INSTALL URINAL PARTITION SCREEN WITH END FLOOR TO CEILING BRACE |
| A727 | NEW STRUCTURAL COLS PER STRUC |
| A728 | 6" MTL STUD FRAMING WITH 3/4" PLYWOOD SHTG AND NEW MTL WALL PANELS ON COMMERICAL BUILDING WRAP |
| A729 | EXISTING PARAPET CAP |
| A730 | NEW MTL CAP PER DETAIL |
| A731 | EXISTING MASONRY AND VENEER WALL |
| A732 | NEW RTU ON MFG CURB. RE: MECH |
| A733 | NEW EPDM ON TAPERED INSULATION |
| A734 | INSTALL BACK WALL GRAB BAR GB-2 - 36" |
| A736 | INSTALL NEW FIXTURES |
| A737 | RE: ELECTRICAL FOR INSTALLATION OF NEW SURFACE MOUNTED LIGHT FIXTURES |
| A738 | INSTALL NEW ELECTRIC HAND DRYER |

RCRBD Record Set
T.A.
05/14/2020


TAB Associates
*The Architectural Balance*
0056 Edwards Village Blvd.
Suite 210
Edwards, CO 81632
(970) 766-1470
fax: (970) 766-1471
email: tab@vail.net
www.tabassociates.com

Civil Engineer
Alpine Engineering, Inc.
970-926-3373
Structural Engineer
JH Structural Engineers
303-318-6539
Mechanical Engineer
BG BuildingWorks, Inc.
970-949-6108
Electrical Engineer
BG BuildingWorks, Inc.
970-949-6108


Seal

# Strawberry Park Elementary
# 39620 Amethyst Drive
## Steamboat Springs, CO

| Revisions: | | |
|---|---|---|
| No | Description | Date |

Issue Dates:
Concept - 11/19/2019
SD's - 1/13/20
DD's - 2/20/20
95% - 03/30/20
CDs - 04/06/20

Sheet Title:
**Enlarged Plans**

Project No:
1935.02

Sheet No:
A7.01

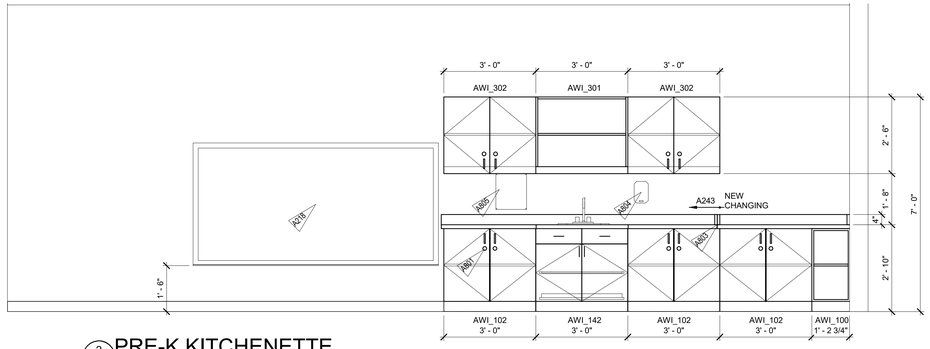


2 A8.01 PRE-K KITCHENETTE
1/2" = 1'-0"

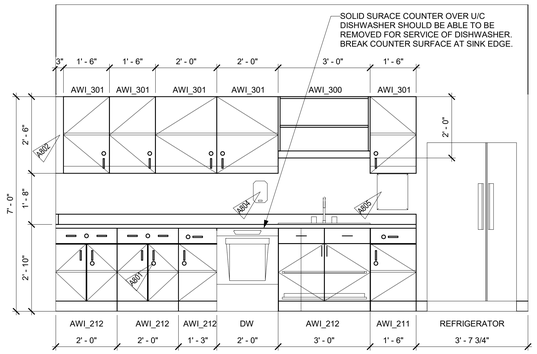


3 A8.01 KITCHEN C26 ELEVATION
1/2" = 1'-0"

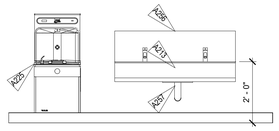


4 A8.01 PRE-K DRINKING FOUNTAIN
1/2" = 1'-0"

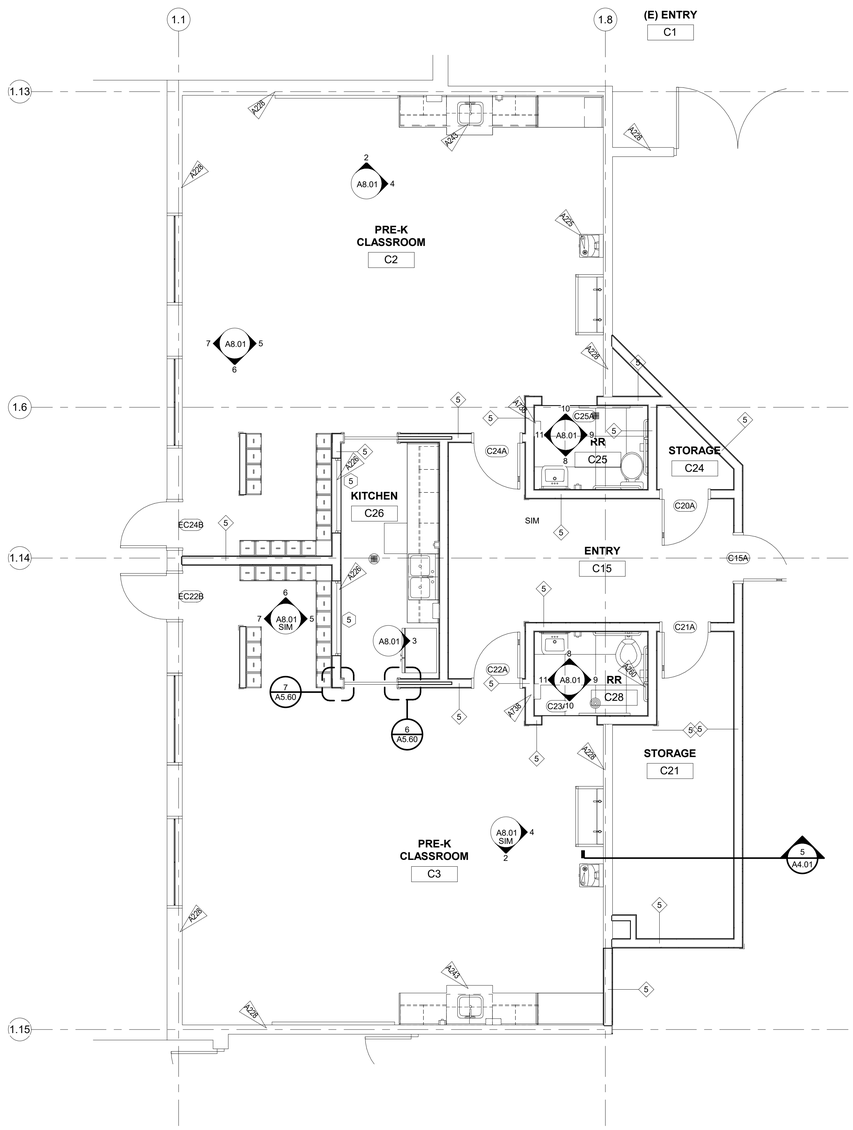


1 A8.01 PARTIAL PRE-K FLOOR PLAN INTERIORS
1/4" = 1'-0"

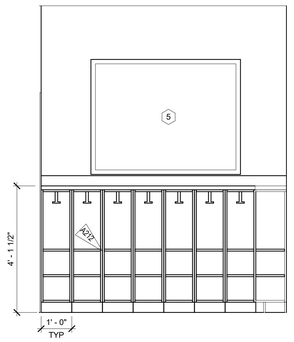


5 A8.01 CUBBIES KITCHEN WALL
1/2" = 1'-0"

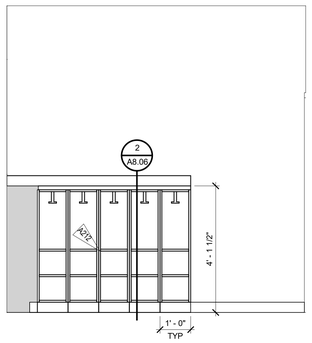


6 A8.01 CUBBIES SHARED WALL
1/2" = 1'-0"

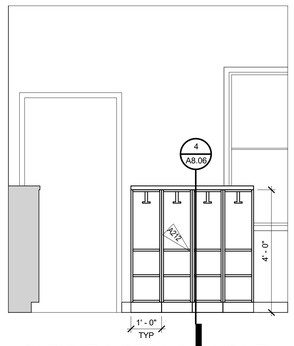


7 A8.01 CUBBIES STAND ALONE
1/2" = 1'-0"

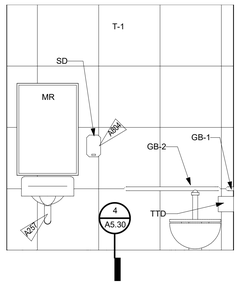


8 A8.01 PRE-K BATH 1
1/2" = 1'-0"

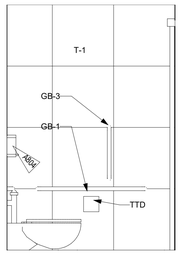


9 A8.01 PRE-K BATH 2
1/2" = 1'-0"

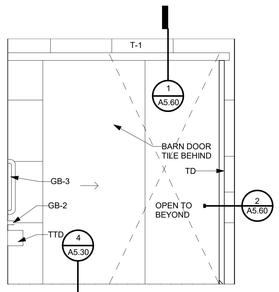


10 A8.01 PRE-K BATH 3
1/2" = 1'-0"

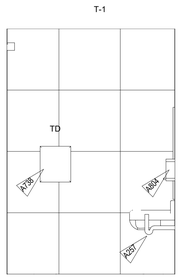


11 A8.01 PRE-K BATH 4
1/2" = 1'-0"

## NOTES:

**INTERIOR ELEVATION NOTES:**

RCRBD Record Set
T.A.
05/14/2020

1. DO NOT SCALE DRAWINGS.

2. VERIFY EQUIPMENT ROUGH IN DIMENSIONS WITH MANUFACTURER

3. ALL DIMENSIONS ARE TO FACE OF CONCRETE, MASONRY OR FACE OF STUD FRAMING UNLESS OTHERWISE NOTED.

4. EQUIPMENT (SHOWN DASHED) SHOWN FOR COORDINATION ONLY. REFER TO EQUIPMENT DRAWINGS FOR SPECIFICATIONS AND DIMENSIONS.

5. REFER TO SHEET A8.05 FOR TYPICAL MOUNTING HEIGHTS.

**ACCESSORIES ABBREVIATIONS:**

| | |
|---|---|
| ACC | ADA ACCESSIBLE HEIGHT |
| BCS | BABY CHANGING STATION |
| GB-1 | GRAB BAR (SIDE WALL) |
| GB-2 | GRAB BAR (BACK WALL) |
| GB-3 | GRAB BAR (VERTICAL) |
| GB-4 | GRAB BAR (AMBULATORY STALL) |
| GB-5 | GRAB BAR (SHOWER) |
| EHD | ELECTRIC HAND DRYER |
| MBH | MOP/BROOM HOLDER |
| RH | ROBE HOOK |
| SCD | SEAT COVER DISPENSER |
| SCR | SHOWER CURTAIN ROD |
| SD | LIQUID SOAP DISPENSER |
| SND | SANITARY NAPKIN DISPOSAL |
| SSS | STAINLESS STEEL SHELF |
| TD | PAPER TOWEL DISPENSER |
| TTD | TOILET PAPER DISPENSER |
| US | UTILITY SHELF |
| WR | WASTE RECEPTACLE |

KEYNOTE LEGEND

| KEY VALUE | KEYNOTE TEXT |
|---|---|
| A212 | INSTALL OPEN STUDENT CUBBIES WITH SOLID SURFACE TOP REF INTERIOR ELEVATIONS |
| A213 | INSTALL NEW TROUGH HANDWASHING SINK, 2 FAUCETS |
| A218 | INSTALL NEW TACKBOARDS WITH PROJECTABLE/MAGNETIC WHITEBOARD ON TEACHING WALL |
| A225 | INSTALL NEW DRINKING FOUNTAIN WITH BOTTLE FILLER, REF MEP DWGS |
| A226 | NEW ONE WAY VIEWING WINDOW |
| A228 | EXISTING WALL TO REMAIN |
| A243 | INSTALL SALVAGED CABINETS WITH NEW SOLID SURFACE COUNTER |
| A256 | INSTALL 12" TALL X WIDTH OF SINK, CORIAN BACKSPLASH |
| A257 | INSTALL PIPE PROECTION WRAPS, PER SPEC |
| A260 | INSTALL NEW WALL MOUNTED GRAB BAR PER CURRENT ADA STANDARDS |
| A738 | INSTALL NEW ELECTRIC HAND DRYER |
| A801 | PROVIDE LOCKING CABINET TYPICAL |
| A802 | FILLER AS NEEDED |
| A803 | INTERMEDIATE DIVIDER BETWEEN CABINETS AND CHANGING AREA, SOLID SURFACING |
| A804 | GC TO INSTALL OWNER SUPPLIED SOAP DISPENSER |
| A805 | GC TO INSTALL OWNER SUPPLIED PAPER TOWEL DISPENSER |


TAB Associates
*The Architectural Balance*
0056 Edwards Village Blvd.
Suite 210
Edwards, CO 81632
(970) 766-1470
fax: (970) 766-1471
email: tab@vail.net
www.tabassociates.com

Civil Engineer
Alpine Engineering, Inc.
970-926-3373
Structural Engineer
JH Structural Engineers
303-318-6539
Mechanical Engineer
BG BuildingWorks, Inc.
970-949-6108
Electrical Engineer
BG BuildingWorks, Inc.
970-949-6108


Seal

# Strawberry Park Elementary
## 39620 Amethyst Drive
Steamboat Springs, CO

Revisions:

| No | Description | Date |
|---|---|---|
| | | |

Issue Dates:
Concept - 11/19/2019
SD's - 1/13/20
DD's - 2/20/20
95% - 03/30/20
CDs - 04/06/20

Sheet Title:
**Interior Elevations Pre-K**

Project No:
1935.02

Sheet No:
A8.01

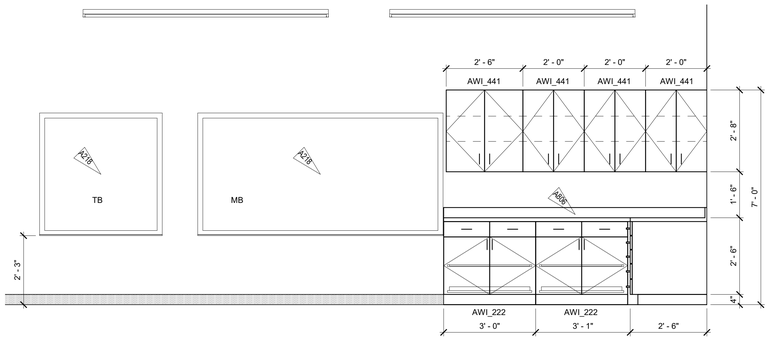


2 A8.02 ART SOUTH
1/2" = 1'-0"

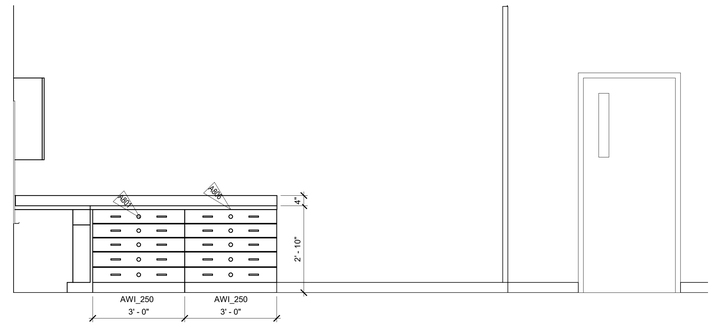


3 A8.02 ART WEST
1/2" = 1'-0"

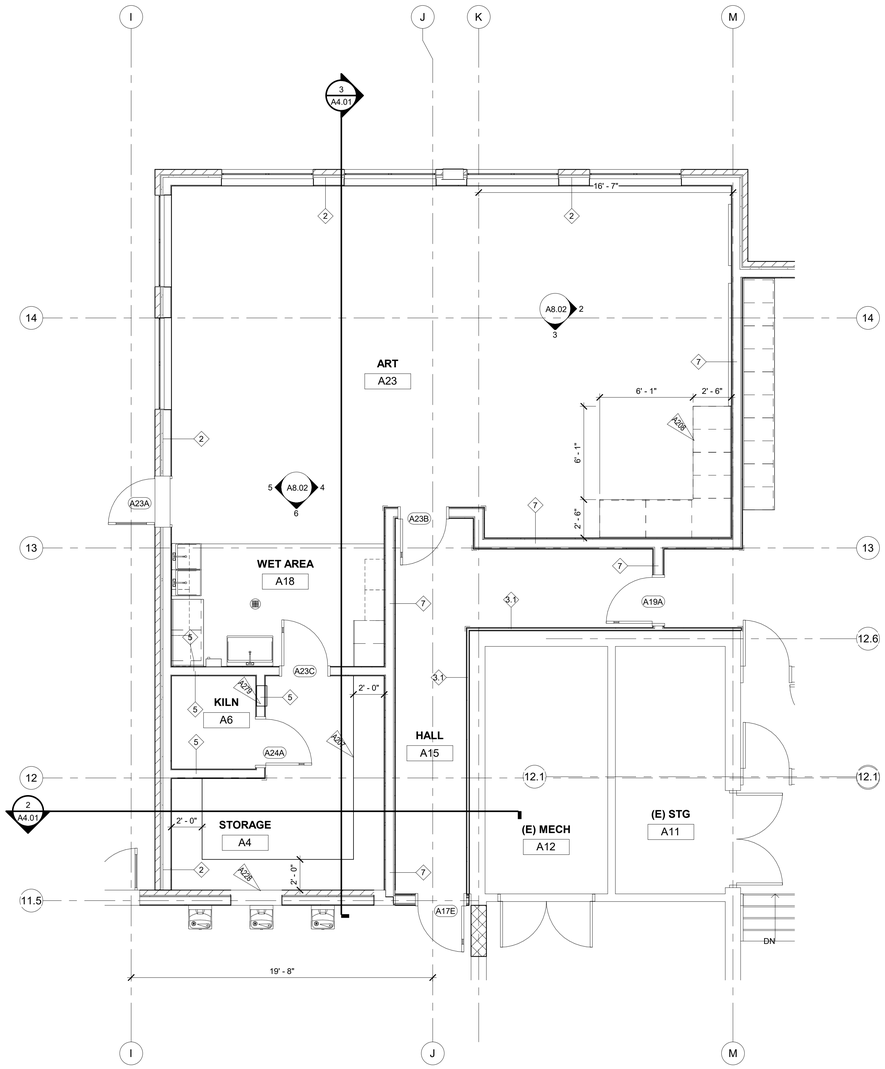


1 A8.02 ART PARTIAL AREA A PLAN INTERIORS
1/4" = 1'-0"

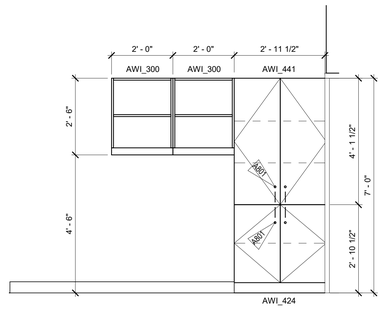


4 A8.02 ART WET SOUTH
1/2" = 1'-0"

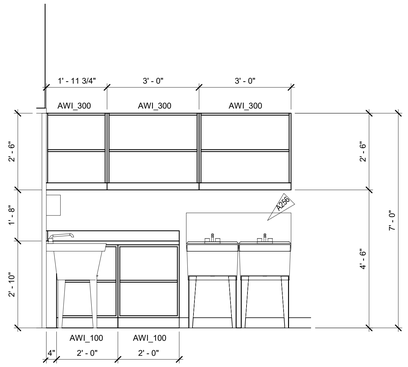


5 A8.02 ART WET AREA NORTH
1/2" = 1'-0"

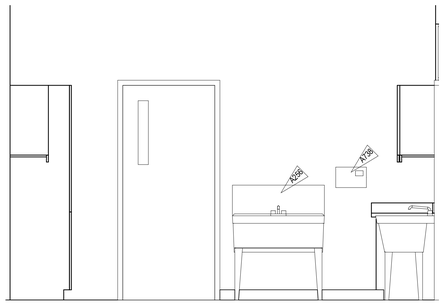


6 A8.02 ART WET WEST
1/2" = 1'-0"

NOTES:

RCKBD Record Set
T.A.
05/04/2020

INTERIOR ELEVATION NOTES:

1. DO NOT SCALE DRAWINGS.

2. VERIFY EQUIPMENT ROUGH IN DIMENSIONS WITH MANUFACTURER

3. ALL DIMENSIONS ARE TO FACE OF CONCRETE, MASONRY, OR FACE OF STUD UNLESS OTHERWISE NOTED.

4. EQUIPMENT (SHOWN DASHED) SHOWN FOR COORDINATION ONLY. REFER TO EQUIPMENT DRAWINGS FOR SPECIFICATIONS AND DIMENSIONS.

5. REFER TO SHEET A8.05 FOR TYPICAL MOUNTING HEIGHTS.

KEYNOTE LEGEND

| KEY VALUE | KEYNOTE TEXT |
|---|---|
| A207 | INSTALL NEW OPEN SHELVING, REF DETAIL ON A8.04 |
| A208 | INSTALL NEW CASEWORK WITH UPPER AND LOWER CABINETS. REF INTERIOR ELEVATIONS |
| A218 | INSTALL NEW TACKBOARDS WITH PROJECTABLE/MAGNETIC WHITEBOARD ON TEACHING WALL |
| A228 | EXISTING WALL TO REMAIN |
| A256 | INSTALL 12" TALL X WIDTH OF SINK, CORIAN BACKSPLASH |
| A279 | NEW ELECTRICAL PANEL REF ELECTRICAL DRAWINGS |
| A738 | INSTALL NEW ELECTRIC HAND DRYER |
| A801 | PROVIDE LOCKING CABINET TYPICAL |
| A806 | 30" DEEP CABINETS |


TAB Associates
*The Architectural Balance*
0056 Edwards Village Blvd.
Suite 210
Edwards, CO 81632
(970) 766-1470
fax: (970) 766-1471
email: tab@vail.net
www.tabassociates.com

Civil Engineer
Alpine Engineering, Inc.
970-926-3373
Structural Engineer
JH Structural Engineers
303-318-6539
Mechanical Engineer
BG BuildingWorks, Inc.
970-949-6108
Electrical Engineer
BG BuildingWorks, Inc.
970-949-6108


Seal

# Strawberry Park Elementary
## 39620 Amethyst Drive
Steamboat Springs, CO

Revisions:

| No | Description | Date |
|---|---|---|
| | | |

Issue Dates:
Concept - 11/19/2019
SD's - 1/13/20
DD's - 2/20/20
95% - 03/30/20
CDs - 04/06/20

Sheet Title:
**Interior Elevations Art**

Project No:
1935.02

Sheet No:
A8.02

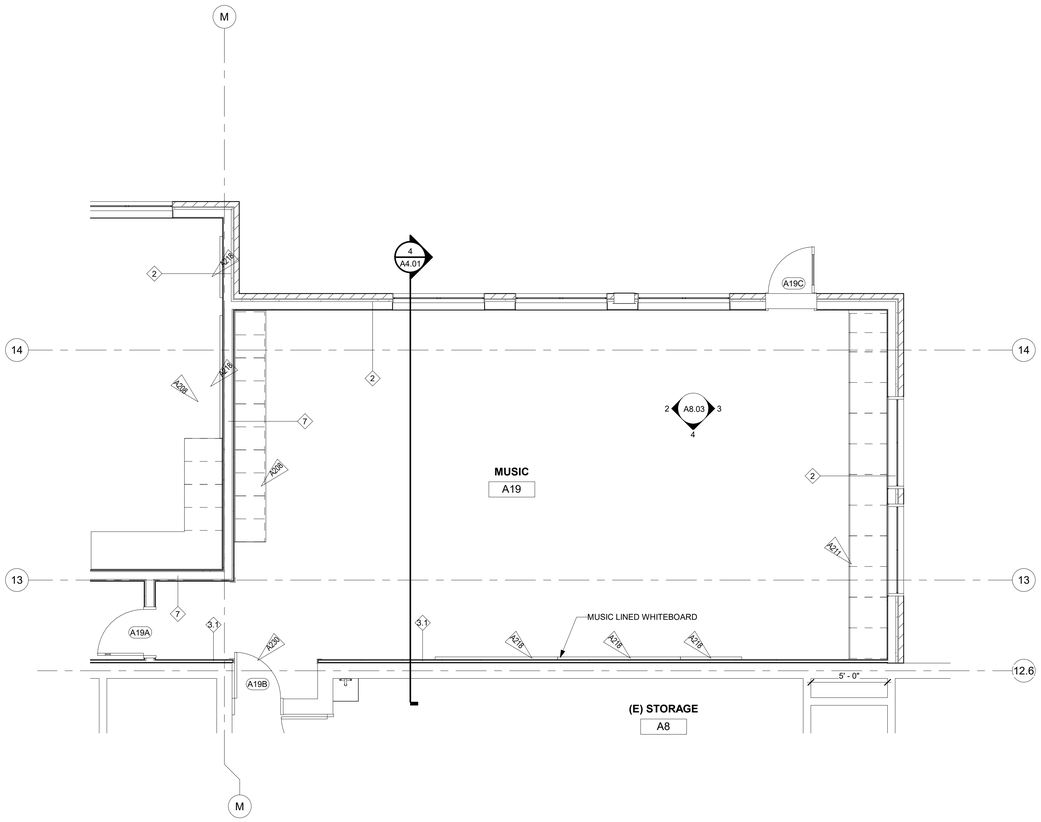


1 A8.03 PARTIAL FLOOR PLAN AREA A MUSIC
1/4" = 1'-0"

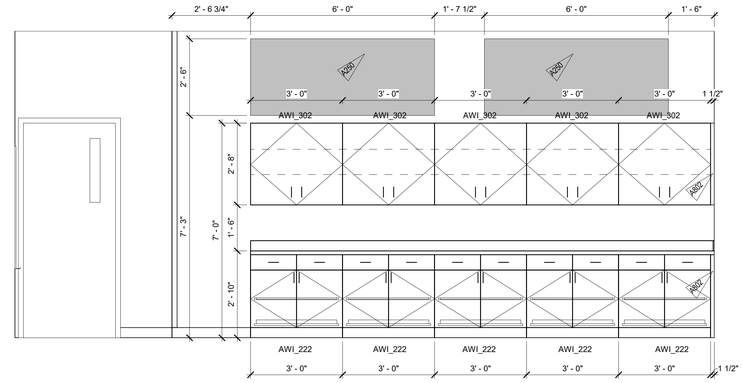


2 A8.03 MUSIC NORTH
1/2" = 1'-0"

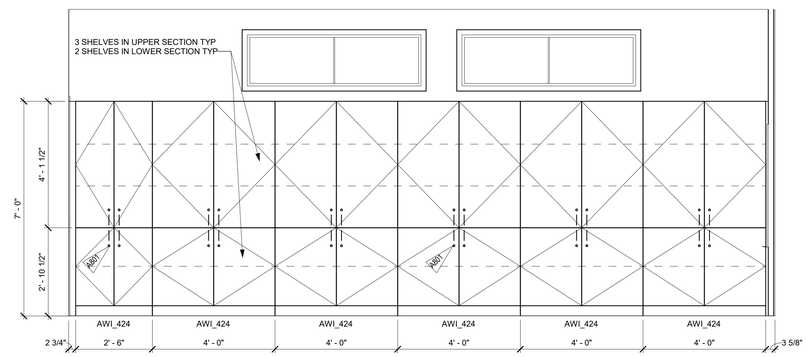


3 A8.03 MUSIC SOUTH
1/2" = 1'-0"

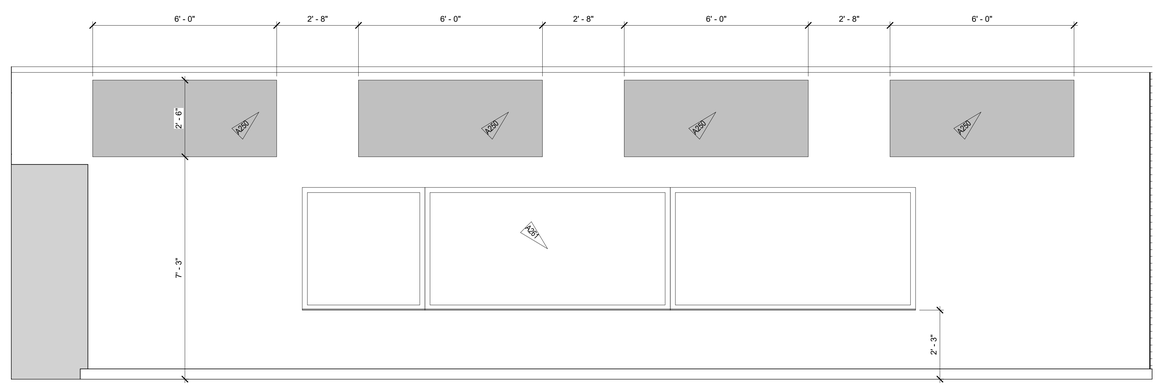


4 A8.03 MUSIC WEST
1/2" = 1'-0"

## NOTES:

INTERIOR ELEVATION NOTES:

1. DO NOT SCALE DRAWINGS.

2. VERIFY EQUIPMENT ROUGH IN DIMENSIONS WITH MANUFACTURER.

3. ALL DIMENSIONS TO FACE OF CONCRETE, MASONRY, OR FACE OF GYPSUM BOARD, UNLESS OTHERWISE NOTED.

4. EQUIPMENT (SHOWN DASHED) SHOWN FOR COORDINATION ONLY. REFER TO EQUIPMENT DRAWINGS FOR SPECIFICATIONS AND DIMENSIONS.

5. REFER TO SHEET A8.05 FOR TYPICAL MOUNTING HEIGHTS.

RGRBD Record Set
T.A.
05/14/2020

KEYNOTE LEGEND

| KEY VALUE | KEYNOTE TEXT |
|---|---|
| A208 | INSTALL NEW CASEWORK WITH UPPER AND LOWER CABINETS. REF INTERIOR ELEVATIONS |
| A211 | INSTALL NEW MUSIC INSTRUMENT STORAGE CABINETS |
| A218 | INSTALL NEW TACKBOARDS WITH PROJECTABLE/MAGNETIC WHITEBOARD ON TEACHING WALL |
| A230 | NEW DOOR IN AN EXISTING FRAME, REF DOOR SCHEDULE |
| A250 | INSTALL NEW NOISE CONTROL FABRIC WALL PANEL |
| A261 | INSTALL (2) NEW 4'x 4' TACKBOARDS WITH A 8'x 4' MAGNETIC WHITEBOARD AND A 6' X 4' PROJECTABLE MARKER BOARD WITH MUSIC STAFF, ON TEACHING WALL |
| A801 | PROVIDE LOCKING CABINET TYPICAL |
| A802 | FILLER AS NEEDED |


TAB Associates
*The Architectural Balance*
0056 Edwards Village Blvd.
Suite 210
Edwards, CO 81632
(970) 766-1470
fax: (970) 766-1471
email: tab@vail.net
www.tabassociates.com

Civil Engineer
Alpine Engineering, Inc.
970-926-3373
Structural Engineer
JH Structural Engineers
303-318-6539
Mechanical Engineer
BG BuildingWorks, Inc.
970-949-6108
Electrical Engineer
BG BuildingWorks, Inc.
970-949-6108


Seal

# Strawberry Park Elementary
# 39620 Amethyst Drive
## Steamboat Springs, CO

Revisions:

| No | Description | Date |
|---|---|---|
| | | |

Issue Dates:
Concept - 11/19/2019
SD's - 1/13/20
DD's - 2/20/20
95% - 03/30/20
CDs - 04/06/20

Sheet Title:
**Interior Elevations Music**

Project No:
1935.02

Sheet No:
A8.03

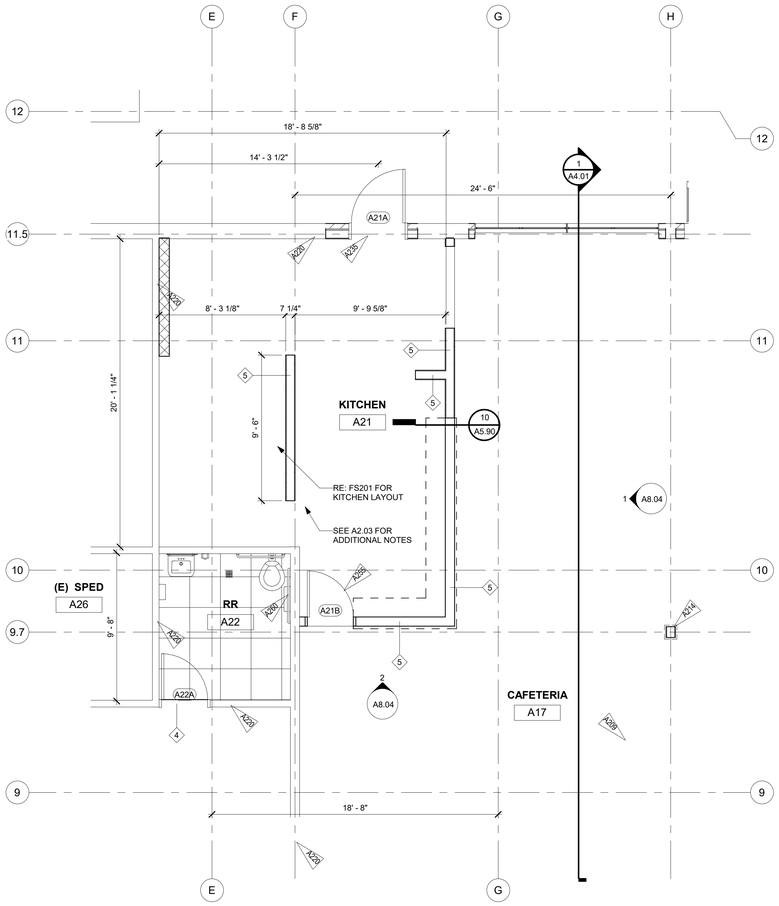


3 A8.04 PARTIAL FLOOR PLAN AREA A KITCHEN
1/4" = 1'-0"

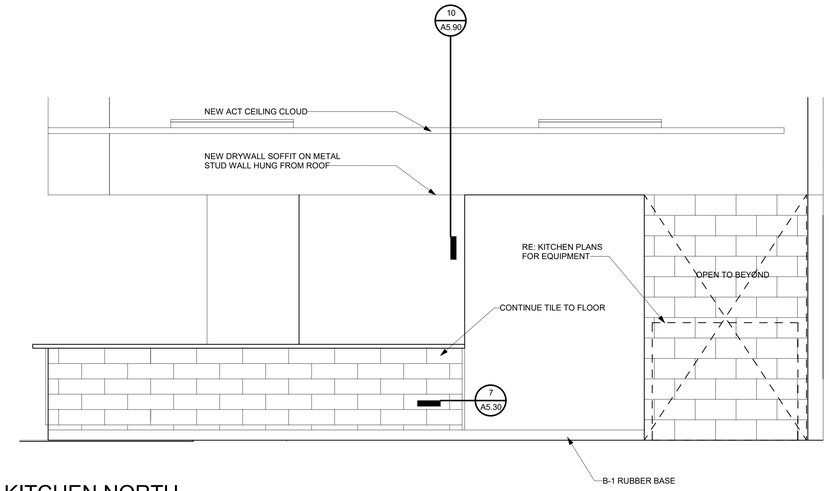


1 A8.04 KITCHEN NORTH
1/2" = 1'-0"

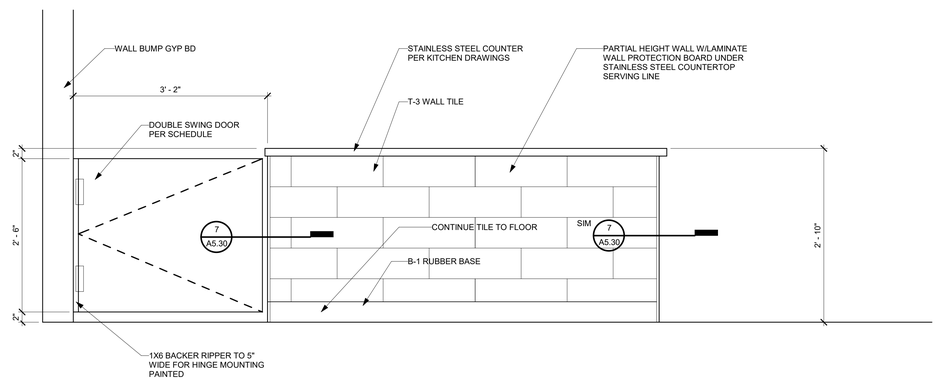


2 A8.04 SERVING LINE SWING DOOR
1" = 1'-0"

## NOTES:

INTERIOR ELEVATION NOTES:

1. DO NOT SCALE DRAWINGS.

2. VERIFY EQUIPMENT ROUGH IN DIMENSIONS WITH MANUFACTURER

3. ALL DIMENSIONS ARE TO FACE OF CONCRETE, MASONRY, OR FACE OF GYPSUM BOARD UNLESS OTHERWISE NOTED.

4. EQUIPMENT (SHOWN DASHED) SHOWN FOR COORDINATION ONLY. REFER TO EQUIPMENT DRAWINGS FOR SPECIFICATIONS AND DIMENSIONS.

5. REFER TO SHEET A8.05 FOR TYPICAL MOUNTING HEIGHTS.

KCRED/ Record Set
T.A.
RET 1 YAE 19 DYSE

KEYNOTE LEGEND

| KEY VALUE | KEYNOTE TEXT |
|---|---|
| A209 | INSTALL NEW FLOOR FINISHES TO MATCH EX FLOOR FINISH ELEVATION |
| A214 | INSTALL NEW DRYWALL WRAP AROUND STRUCTURAL COLUMN, REF STRUCT |
| A220 | EXISTING WALL TO REMAIN. PATCH DRYWALL AS NECESSARY, REPAINT ENTIRE WALL AFTER. PATCHING OF WALL ABOVE EXISTING CEILING MAY BE NECESSARY TO EXTEND TO DECK |
| A235 | INFILL WALL W/ SIMILAR EX. WALL TYPE 2.1 & SALVAGE BRICK WHERE EXISTING WINDOWS AND DOORS ARE TO BE REMOVED. TOOTH IN BRICK @ JAMBS. |
| A255 | INSTALL NEW DOUBLE SWING SHORT DOOR |
| A260 | INSTALL NEW WALL MOUNTED GRAB BAR PER CURRENT ADA STANDARDS |


TAB Associates
*The Architectural Balance*
0056 Edwards Village Blvd.
Suite 210
Edwards, CO 81632
(970) 766-1470
fax: (970) 766-1471
email: tab@vail.net
www.tabassociates.com

Civil Engineer
Alpine Engineering, Inc.
970-926-3373
Structural Engineer
JH Structural Engineers
303-318-6539
Mechanical Engineer
BG BuildingWorks, Inc.
970-949-6108
Electrical Engineer
BG BuildingWorks, Inc.
970-949-6108


Seal

# Strawberry Park Elementary
## 39620 Amethyst Drive
### Steamboat Springs, CO

Revisions:

| No | Description | Date |
|---|---|---|
| | | |

Issue Dates:
Concept - 11/19/2019
SD's - 1/13/20
DD's - 2/20/20
95% - 03/30/20
CDs - 04/06/20

Sheet Title:
**Interior Elevations Cafeteria/ Kitchen**

Project No:
1935.02

Sheet No:
A8.04

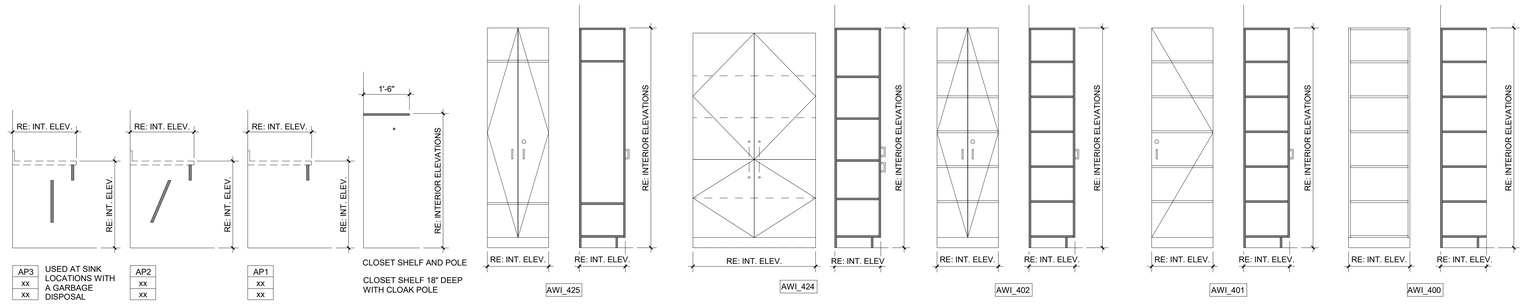


SPECIALTY CABINET AND APRONS

AWI_4xx

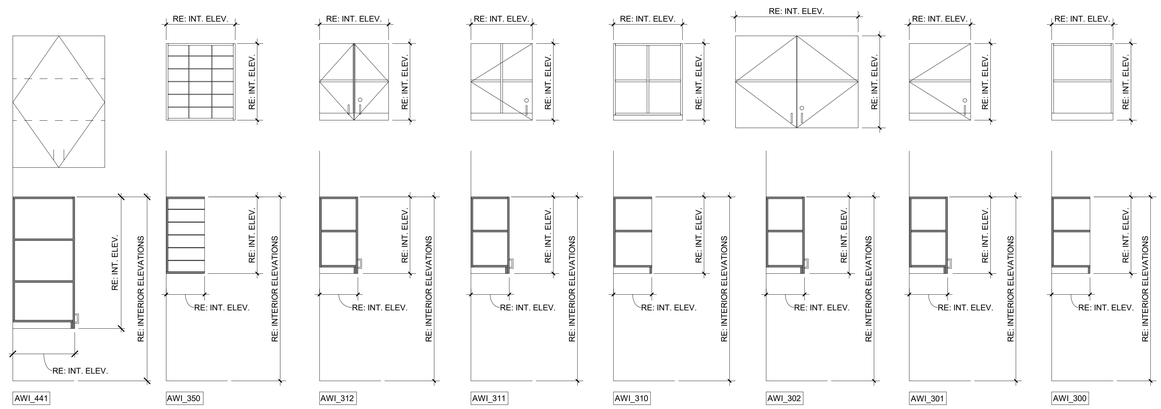


AWI_3xx

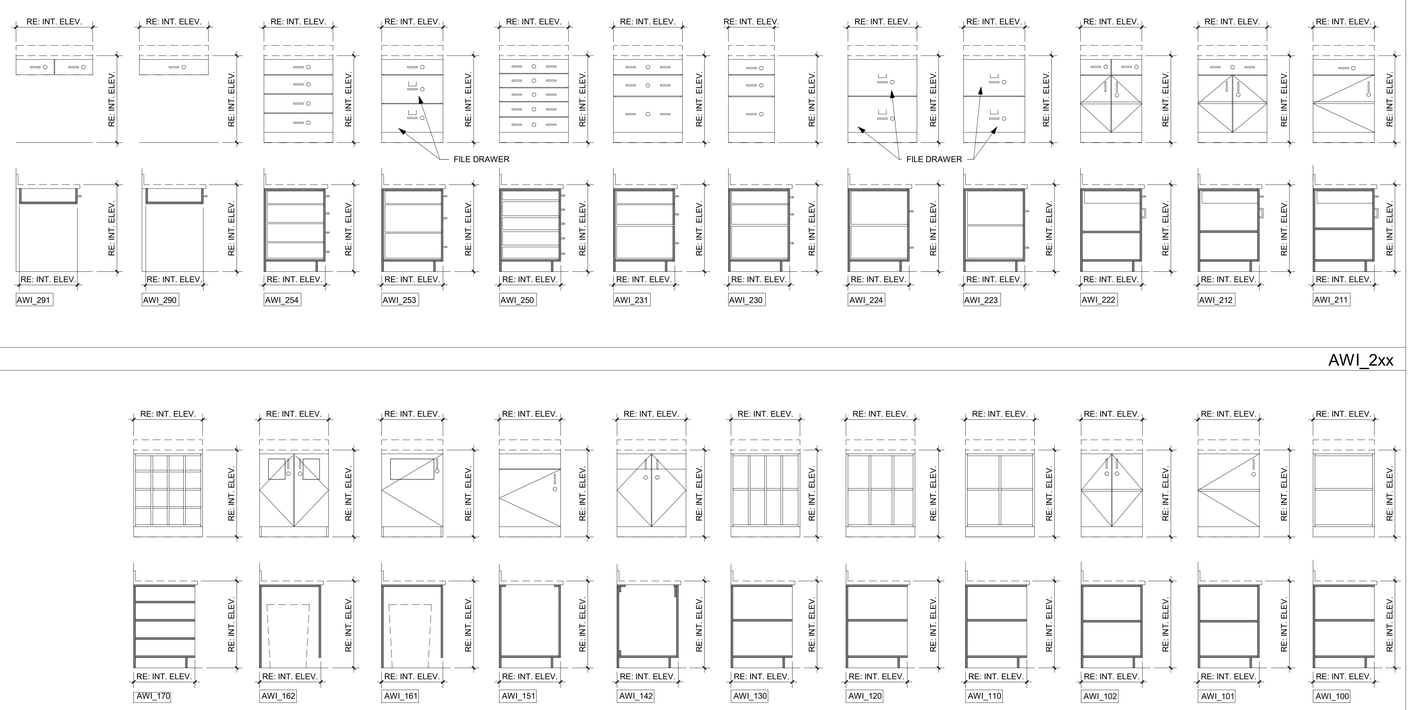


AWI_2xx




AWI_1xx

TYPICAL CASEWORK
1/2" = 1'-0"

## CHILDREN MOUNTING HEIGHTS (AGES 3 THROUGH 4)

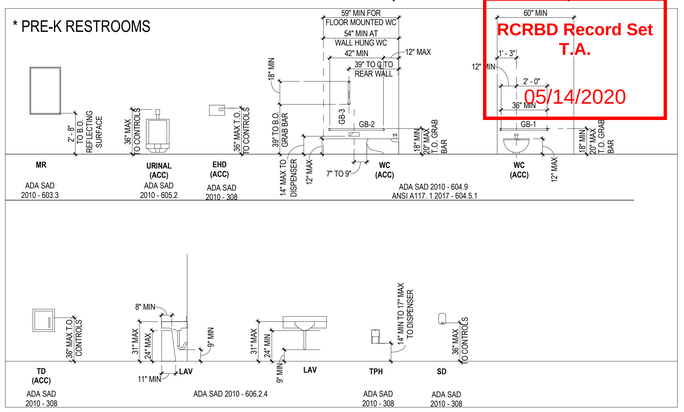


RCRBD Record Set
T.A.
05/14/2020

## CHILDREN MOUNTING HEIGHTS (AGES 5 THROUGH 8)

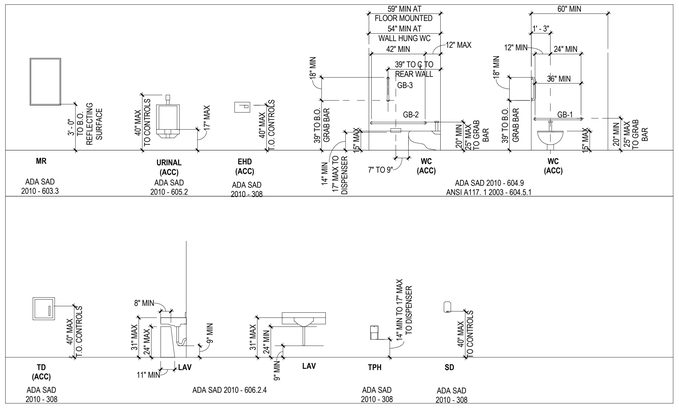


## ADULT MOUNTING HEIGHTS

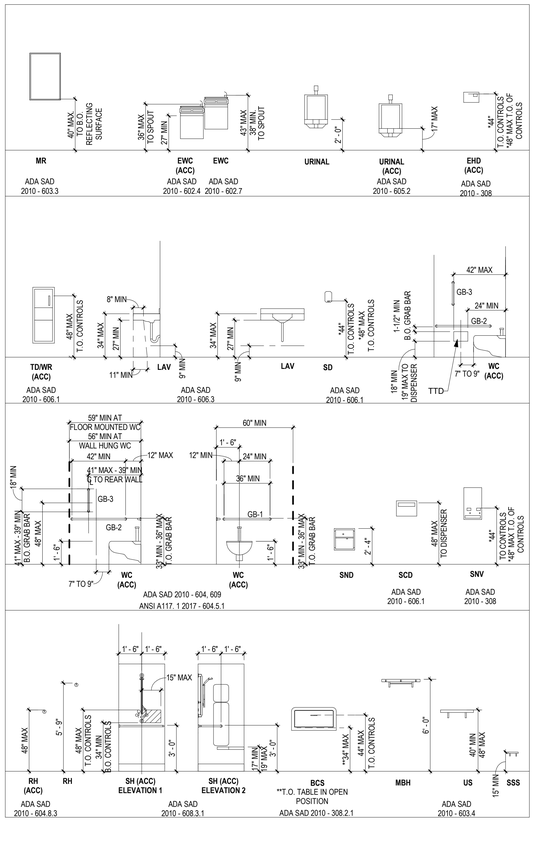



TAB Associates
*The Architectural Balance*
0056 Edwards Village Blvd.
Suite 210
Edwards, CO 81632
(970) 766-1470
fax: (970) 766-1471
email: tab@vail.net
www.tabassociates.com

Civil Engineer
Alpine Engineering, Inc.
970-926-3373
Structural Engineer
JH Structural Engineers
303-318-6539
Mechanical Engineer
BG BuildingWorks, Inc.
970-949-6108
Electrical Engineer
BG BuildingWorks, Inc.
970-949-6108


Seal

# Strawberry Park Elementary
## 39620 Amethyst Drive
Steamboat Springs, CO

Revisions:

| No | Description | Date |
|---|---|---|
| | | |

Issue Dates:
Concept - 11/19/2019
SD's - 1/13/20
DD's - 2/20/20
95% - 03/30/20
CDs - 04/06/20

Sheet Title:
**Restroom and Cabinet Elevations**

Project No:
1935.02

Sheet No:
A8.05

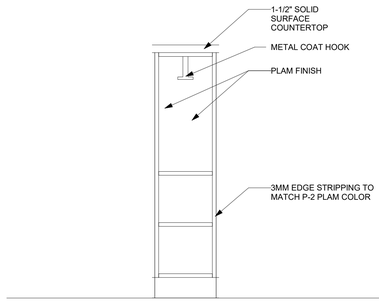


1 A8.06 NEW PRE-K CUBBY
1" = 1'-0"

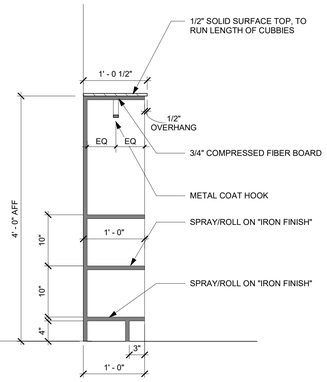


2 A8.06 TYP PRE-K CUBBY 2
1" = 1'-0"

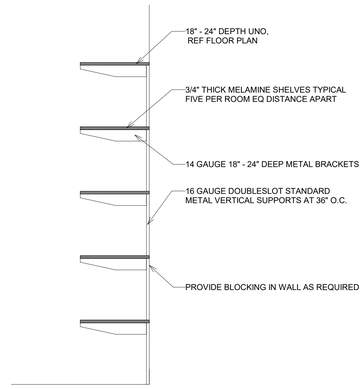


3 A8.06 TYP STORAGE SHELF SECTION
3/4" = 1'-0"

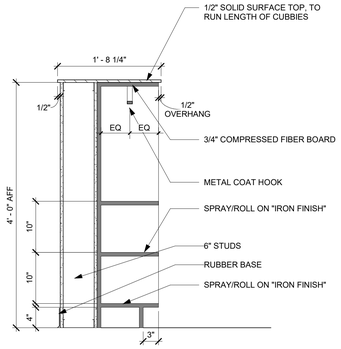


4 A8.06 TYP PRE-K CUBBY AT WALL
1" = 1'-0"

**RCRBD Record Set**
**T.A.**

05/14/2020


TAB Associates
*The Architectural Balance*
0056 Edwards Village Blvd.
Suite 210
Edwards, CO 81632
(970) 766-1470
fax: (970) 766-1471
email: tab@vail.net
www.tabassociates.com

Civil Engineer
Alpine Engineering, Inc.
970-926-3373
Structural Engineer
JH Structural Engineers
303-318-6539
Mechanical Engineer
BG BuildingWorks, Inc.
970-949-6108
Electrical Engineer
BG BuildingWorks, Inc.
970-949-6108


Seal

# Strawberry Park Elementary
# 39620 Amethyst Drive
## Steamboat Springs, CO

Revisions:

| No | Description | Date |
|---|---|---|
| | | |

Issue Dates:
Concept - 11/19/2019
SD's - 1/13/20
DD's - 2/20/20
95% - 03/30/20
CDs - 04/06/20

Sheet Title:
**Casework**

Project No:
1935.02

Sheet No:
A8.06

C:\Users\greg\Documents\1935.02 SSSD Strawberry Park Elem_greg@tabassociates.com.rvt

4/2/2020 11:11:16 AM

# GENERAL NOTES

RCRBD Record Set
T.A.
05/14/2020

## STANDARD ABBREVIATIONS

| | |
|---|---|
| AB | ANCHOR BOLT |
| ACI | AMERICAN CONCRETE INSTITUTE |
| ADDL | ADDITIONAL |
| AFF | ABOVE FINISH FLOOR |
| ALT | ALTERNATE |
| APA | AMERICAN PLYWOOD ASSOCIATION |
| ARCH | ARCHITECT / ARCHITECTURAL |
| B | BOTTOM |
| BETW | BETWEEN |
| BF | BOTTOM OF FOOTING |
| BL | BRICK LEDGE |
| BLDG | BUILDING |
| BLKG | BLOCKING |
| BRG | BEARING |
| BW | BOTTOM OF WALL |
| CFS/CFMF | COLD FORMED STEEL/COLD FORMED METAL FRAMING |
| CIP | CAST-IN-PLACE |
| CJ | CONTROL JOINT, CONSTRUCTION JOINT |
| CJP | COMPLETE JOINT PENETRATION |
| CLR | CLEAR |
| CMU | CONCRETE MASONRY UNIT |
| CONC | CONCRETE |
| CONST | CONSTRUCTION |
| CONT | CONTINUOUS |
| DAS | DEFORMED ANCHOR STUD |
| DL | DEAD LOAD |
| DN | DOWN |
| DT | DRAG TRUSS |
| DWG | DRAWING |
| EA | EACH |
| EF | EACH FACE |
| EJ | EXPANSION JOINT |
| EL | ELEVATION |
| ELEV | ELEVATOR |
| EQ | EQUAL |
| EW | EACH WAY |
| EXP | EXPANSION |
| EXT | EXTERIOR |
| (E) | EXISTING |
| FD | FLOOR DRAIN |
| FDN | FINISHED FLOOR |
| FF | FOUNDATION |
| FTG | FOOTING |
| FV | FIELD VERIFY |
| GALV | GALVANIZED |
| GC | GENERAL CONTRACTOR |
| GET | GABLE END TRUSS |
| GL | GLULAM BEAM OR COLUMN |
| GT | GIRDER TRUSS |
| HAS | HEADED ANCHOR STUD |
| HORIZ | HORIZONTAL |
| HSS | HOLLOW STRUCTURAL SECTION |
| HGT | HEIGHT |
| HT | HIP TRUSS |
| IBC | INTERNATIONAL BUILDING CODE |
| IF | INSIDE FACE |
| JT | JOINT |
| k | KIPS |
| LL | LIVE LOAD |
| LLBB | LONG LEG BACK-TO-BACK |
| LLH | LONG LEG HORIZONTAL |
| LLV | LONG LEG VERTICAL |
| LVL | LAMINATED VENEER LUMBER |
| MATL | MATERIAL |
| MAX | MAXIMUM |
| MECH | MECHANICAL |
| MFR | MANUFACTURER |
| MIN | MINIMUM |
| MISC | MISCELLANEOUS |
| MTL | METAL |
| NIC | NOT IN CONTRACT |
| NTS | NOT TO SCALE |
| OC | ON-CENTER |
| OH | OPPOSITE HAND |
| OPNG | OPENING |
| PAF | POWDER ACTUATED FASTENER |
| PC | PRECAST |
| PEWRT | PRE-ENGINEERED WOOD ROOF TRUSS |
| PJP | PARTIAL JOINT PENETRATION |
| PL | PLATE |
| PLWD | PLYWOOD |
| QTY | QUANTITY |
| R | RADIUS |
| RD | ROOF DRAIN |
| REINF | REINFORCING |
| REQD | REQUIRED |
| RO | ROUGH OPENING |
| SCHED | SCHEDULE |
| SHT | SHEET |
| SHTG | SHEATHING |
| SIM | SIMILAR |
| SL | STONE LEDGE |
| SLBB | SHORT LEGS BACK-TO-BACK |
| SOG | SLAB-ON-GRADE |
| SP | SPACE(S) |
| SPECS | SPECIFICATIONS |
| STD | STANDARD |
| STFR | STIFFENER |
| STL | STRUCTURAL |
| SYM | SYMMETRICAL |
| TC | TOP OF CONRETE |
| TF | TOP OF FOOTING |
| THK | THICKNESS |
| TL | TOP OF LEDGE |
| TM | TOP OF MASONRY |
| TP | TOP OF PLATE |
| TS | TOP OF STEEL |
| TW | TOP OF WALL |
| T&B | TOP AND BOTTOM |
| TYP | TYPICAL |
| UNO | UNLESS NOTED OTHERWISE |
| VERT | VERTICAL |
| VT | VALLEY TRUSS |
| W/ | WITH |
| WD | WOOD |
| WP | WORK POINT |
| WT | WEIGHT |
| WWR | WELDED WIRE REINFORCEMENT |
| # | POUNDS |

## DEFERRED SUBMITTALS

THE DESIGN OF THE FOLLOWING BUILDING COMPONENTS SHALL BE TREATED AS DEFERRED SUBMITTALS. ALL ASSOCIATED DRAWINGS AND CALCULATIONS SHALL BE STAMPED AND SIGNED BY THE ENGINEER RESPONSIBLE FOR THEIR PREPARATION. AFTER REVIEW, THE GENERAL CONTRACTOR SHALL FORWARD THE DEFERRED SUBMITTAL DOCUMENTS TO THE BUILDING DEPARTMENT. DEFERRED SUBMITTAL ITEMS SHALL NOT BE INSTALLED UNTIL THEIR DESIGN AND SUBMITTAL DOCUMENTS HAVE BEEN APPROVED BY THE BUILDING OFFICIAL:

1. COLD-FORMED METAL FRAMING
2. CURTAINWALL SYSTEMS
3. STEEL BAR JOISTS

## GENERAL NOTES:

1. All work shall conform to the minimum standards of the International Building Code, 2015 edition with Routt County Amendments.
2. Design Loads
   - Dead Loads
     - Roof superimposed dead load — 20 psf
     - Mechanical equipment — actual weight
   - Roof Snow Load
     - Snow Criteria:
       - Pg = 90 psf, Pf = 72 psf, Ce = 1.0, Ct = 1.0, Is = 1.1
   - Occupancy Category — III
   - Wind Criteria:
     - 120 mph (3 second gust, Ultimate) 90 mph (Nominal), Exposure C
     - Building Category = Enclosed
     - Internal Pressure Coefficient = ± 0.18

| COMPONENTS AND CLADDING WIND PRESSURES[1,2] | | | | |
|---|---|---|---|---|
| | Effective Area | | | |
| Zones[3] | 10 sf | 20 sf | 50 sf | 100 sf |
| Zone 1 - Roof Interior | 32.1 (19.3) | 31.3 (18.8) | 30.2 (18.1) | 29.4 (17.7) |
| Zone 2 - Roof Edge | 53.9 (32.3) | 48.2 (28.9) | 40.6 (24.4) | 34.8 (20.9) |
| Zone 3 - Roof Corner | 81.1 (48.7) | 67.2 (40.3) | 48.7 (29.2) | 34.8 (20.9) |
| Zone 4 - Wall Typical | 34.8 (20.9) | 33.3 (20.0) | 31.5 (18.9) | 30.0 (18.0) |
| Zone 5 - Wall Corner | 43.1 (25.8) | 40.1 (24.1) | 36.3 (21.8) | 33.3 (20.0) |
| Parapet | 108 (65) | 100 (60) | 91 (55) | 83 (50) |

Footnotes:
1. Pressures shown are determined using ASCE 7-10 and are ultimate with service level pressures shown in parentheses.
2. Refer to details for wind loading on miscellaneous rooftop structures, etc. Roof overhangs shall be designed for applicable component and cladding loads per Figure 30.10-1.
3. Refer to Figure 30.4-1 through 30.6-1 in ASCE 7-10 for description of each zone.

   - Seismic Criteria
     - Site Class D, Design Category B, Equivalent Lateral Force Procedure
     - Seismic Force Resisting System = Steel Ordinary Concentrically Braced Frames
     - R = 3 1/4, Fa = 1.6, Fv = 2.4, Ss = 0.27, S1 = 0.074, SDS = 0.285, SD1 = 0.119, Cs = 0.11, Ie = 1.25, V = 12 kips

3. The frost depth is 48 inches. All foundations shall be deeper than this.
4. All omissions or conflicts between the various elements of the working drawings and/or specifications shall be brought to the attention of the Architect/Engineer before proceeding with any work so involved.
5. Contractor must check all dimensions, framing conditions, and site conditions before starting work. Architect/Engineer shall be notified immediately of any discrepancies or possible deficiencies.
6. A detail, section, elevation, etc. reference may be indicated only once on a structural construction drawing, but is to be used at all like and similar construction conditions.
7. No modification shall be made to any structural member without the approval of the Architect/Engineer. This also applies to any openings for plumbing, electrical and mechanical trades.
8. Stability of the structural frame during construction is the responsibility of the General Contractor. The structural frame is not complete until all connections to lateral force resisting elements have been made, inspected as required by the building official and accepted by the SER. This includes all diaphragm elements such as metal deck, plywood and gypsum board sheathing, metal straps, concrete topping, tie rods and the like. All concrete elements must have reached their required strength. Temporary bracing of the structure during construction should be provided by the General Contractor and their Sub-Contractors as necessary.
9. Design, materials, equipment, and products other than those described below or indicated on the drawings may be considered for use, provided prior approval is obtained for the Owner, Architect/Engineer, and the applicable governing code authority.
10. Nothing contained within the contract documents shall relieve the general contractor and the subcontractors of:
    a. the responsibility to determine any aspect of how the work is to be performed
    b. dealing with matters of safety of personnel
    c. safety of property
    d. superintending of the work
    e. construction means and methods
11. The Contractor shall be responsible for all excavation procedures and protection of adjacent property, structures, utilities, etc. in accordance with all national, state and local ordinances.
12. The Contractor shall coordinate, review and submit shop drawings that identify all penetrations for all trades through structural walls, slabs, beams and columns. A single drawing of each portion of the structure identifying locations and sizes of all sleeves and blockouts shall be submitted for review and approval four weeks prior to placing concrete in these structural elements. Penetrations not shown on the approved shop drawings will not be permitted in the field.
13. Shop drawings and calculations where applicable shall be submitted to the Architect/Engineer for approval prior to fabrication or construction of all structural items including the following: concrete and masonry reinforcement, embedded steel items, structural steel, metal decking, shear stud layout, stairs, pre-engineered wood and pre-engineered cold-formed steel. Approved shop drawings shall be submitted to the local building department by the contractor for record only. Allow 2 weeks for review of shop drawings.
14. Special inspection, in accordance with the International Building Code or as required by the construction documents, shall be performed by a qualified inspector from an approved agency. Reports shall be issued to the Architect/Engineer and the Building Department at the completion of each type of work stating whether the work was performed in conformance with the approved plans and specifications. See inspection schedules for specific requirements.
15. All mechanical and electrical equipment purchases shall be coordinated with the structural drawings by the General Contractor. This includes equipment size, weight, openings, required support, etc. Any discrepancies shall be brought to the architect's and engineer's attention prior to equipment purchase.
16. The structural drawings have been completed using the available information regarding existing conditions. The structural engineer has not field verified any existing conditions. It is the responsibility of the general contractor to field verify the existing conditions and notify the architect and engineer of any discrepancies before proceeding with work.
17. The general contractor shall submit any substitution request to the architect and engineer prior to making any changes. The request shall include all information required for the engineer to fully evaluate the substitution and determine any required compensation for the evaluation.
18. Any item that is listed as a discrepancy by the independent testing agency shall be kept in a log by the general contractor throughout the project. the log shall include the discrepancy number, date of discrepancy, and description of discrepancy. The general contractor shall contact the engineer in a timely manner to address each discrepancy and keep a record of the required corrections, The letter of substantial completion provided by the engineer cannot be released until every item listed in the discrepancy log has been addressed and resolved.
19. For any item that requires a change or correction due to contractor error or deficiency in construction, the contractor shall submit plans, details, and calculations for the proposed solution. These shall be reviewed by the architect and engineer prior to completion of the work. Some corrections may require submitted documentation to be stamped and signed by a professional engineer who is registered in the project jurisdiction.
20. The contractor shall not stockpile any building materials or equipment in a manner that will exceed the load carrying capacity, cause damage, or create excessive deflection to any structural element. The contractor shall contact the engineer for evaluation of locations where it may be necessary for heavy equipment or building material stockpiles prior to placement of these items on any structural element.

## SPREAD FOOTING FOUNDATIONS

1. All foundation design and construction shall be accomplished and performed in accordance with the Soils Report as prepared by NWCC, report number 19-11673 dated 12/13/2019. This Soils Report is hereby made a part of these General Notes and all recommendations therein shall be considered as minimums.
2. All foundation excavations, compaction, fill material, testing and inspection of foundation bearing strata shall be performed under supervision of a licensed Geotechnical Engineer. Inspections shall be performed prior to placement of reinforcement and pouring of concrete.
3. Contractor shall provide for de-watering of excavations to remove water from any source prior to pouring concrete.
4. Do not place concrete for foundation on frozen soil.
5. Allowable bearing pressure used in design is 3000 psf.
6. Lateral earth pressure used in the design of retaining walls backfilled with on site soils:
   - Active — 45 psf/ft
   - At rest — 55 psf/ft
   - Coefficient of Friction — 0.4

## CONCRETE:

1. Concrete work shall conform to all requirements of the International Building Code and ACI 318, Building Code Requirements for Structural Concrete, latest approved editions.
2. Design mixes shall provide concrete with the following properties as indicated on drawings and schedules:

| CONCRETE MIX MATRIX | | | | | | | | |
|---|---|---|---|---|---|---|---|---|
| Mix Type | Intended Use of Concrete | Compressive Strength (28 days) | Max. W/C Ratio | Max. Agg. Size[2] | Slump Limits[3] | Cement Type | Air Content[1] | Required Admixtures |
| A | Foundation walls, grade beams & footings | 4500 psi | 0.53 | 1" | 3-5" | I / II | 4%-7% | AEA[1] |
| B | Interior slab-on-grade | 3000 psi | 0.53 | 3/4" | 3-5" | I / II | | |
| C | Exterior slab-on-grade and parking slab-on-grade | 4500 psi | 0.45 | 3/4" | 3-5" | I / II | 4%-7% | AEA[1] |
| D | Other concrete | 3000 psi | 0.50 | 3/4" | 3-5" | I / II | 4%-7% | AEA[1] |

Footnotes:
1. Air entraining admixture
2. Normal weight aggregate unless noted otherwise
3. Range indicates minimum and maximum limits

3. Use accelerating admixtures in cold weather only when approved by Architect/Engineer. Use of admixtures will not relax cold weather placement requirements. Do not use calcium chloride. Use set retarding admixtures during hot weather only when approved by Architect/Engineer.
4. Prepare concrete mix designs for each type and strength of concrete, using either laboratory trial batch or field experience methods as specified in ACI 301. If trial batch method is used, use an independent testing facility acceptable to Engineer for preparing and reporting of proposed mix designs.
5. Submit written reports to Engineer of each proposed mix design at least 15 days prior to start of work. Do not begin concrete production until Engineer has reviewed mix designs.
6. Portland Cement shall conform to ASTM C150, Type I / II. Aggregate for normal weight concrete shall conform to all requirements and tests of ASTM C33. Aggregate for lightweight concrete shall conform to all requirements and tests of ASTM C330. Concrete mixing operations, etc., shall conform to ASTM C94 and ACI 304.
7. Clear concrete coverage for reinforcing bars shall be as follows unless noted otherwise:
   - Concrete exposed to earth without forms.................... 3"
   - Concrete poured in forms but exposed to earth or weather:
     - #5 bars or smaller.................... 1 1/2"
     - Bars larger than #5.................... 2"
   - Concrete not exposed to earth or weather:
     - Slabs, walls and joists.................... 3/4"
   - Beams and column bars.................... 1 1/2"
     - (principal reinf., ties and stirrups)
8. All top reinforcing shall terminate with standard hooks at ends of slabs, construction joints, beams, walls, and foundations unless noted otherwise.
9. Non-shrink grout shall conform to ASTM C1107.
10. Water-reducing admixtures shall conform to ASTM C494, and be used in strict accordance with the manufacturer's recommendations. An air-entraining agent conforming to the ASTM C260 shall be used in all concrete mixes for work which is exposed to weather.
11. Cracking of concrete slabs due to shrinkage is expected. The general contractor shall anticipate repairing cracks in all slabs but particularly at the parking levels. Rout and seal all cracks 0.01 inch wide and greater as described in the specifications.
12. Embedded conduits, pipes, and sleeves in concrete:
    a. Any and all conduits, pipes, and sleeves embedded in structural concrete shall be shown in plan or thoroughly described in writing and provided to the Structural Engineer for written approval a minimum of four weeks prior to installation.
    b. All embedded items shall be located as to not impair the strength of the construction of the concrete member.
    c. Contractor shall coordinate the installation of all embedded items and penetrations. Cost of additional reinforcement or where conduit is to be provided with Schedule 40 uncoated or galvanized steel pipe (ASTM 53) shall be borne by the contractor.
    d. All embedded items shall conform to the following, unless otherwise directed by the Structural Engineer or shown on the structural drawings:
       1. Concrete slabs on grade:
          A. Horizontal conduit shall not be embedded within a slab on grade.
       2. Concrete walls:
          A. Conduits shall not be embedded horizontally in any wall, length wise.
          B. Conduits shall not be embedded vertically in any wall less than 8" thick.
          C. For other conditions, proposed conduits less than or equal to 1 1/2" outside diameter shall conform to the following:
             a. No embedment shall disrupt the placement of the reinforcing steel.
             b. The conduit shall be placed between vertical reinforcement layers. The conduit shall be placed in the middle third of the wall for single layer vertical reinforcement.
13. All blockouts in foundation walls and footings must be approved by the Structural Engineer prior to construction.
14. All concrete shall be consolidated by vibration, spading, rodding, or forking so that concrete is thoroughly worked around the reinforcement and embedded items and into corners of forms without segregation of materials.
15. Provide 3/4" chamfers at all exposed corners.
16. Provide 2- #5 bars (1 each face) with 2'-0" projection around all openings greater than 10" in any dimension in concrete slabs and walls, unless noted otherwise.
17. Provide 2- #5 bars at all reentrant and opening corners.
18. Control joints in concrete
    a. Control joints shall be provided in all slabs-on-grade at a maximum spacing of 10'-0" OC for 4" slabs and 12'-0" OC for 5" slabs, unless noted otherwise. Joints shall be 1/8" wide x (thickness/4)" deep continuous sawed joint or pre-molded joint. Joints shall be provided at all column centerlines, corners and ends of walls, re-entrant corners and any other areas with high crack potential. Proposed joint locations shall be submitted to the architect for approval prior to completion of work.
19. Slabs, walls, footings and beams shall not have joints in a horizontal plane. Any stop in concrete work must be made at quarter point of span with vertical bulkheads and horizontal keys, unless otherwise shown. All construction joints shall be as detailed or as approved by the Engineer.
20. Refer to Architectural drawings for reveals, areas of textured concrete or special finishes, items required to be cast into the concrete, curbs and slab depressions.
21. Concrete tolerances shall be as specified in ACI 117 and as follows:
    - Tops of walls and columns.................... -3/4", +0"
    - Plumbness....................1/4" in 10 feet, 1" maximum total
    - Plan alignment....................1/2" in 20 feet, 1" maximum total
    - Cross-sectional dimension.................... -1/4", +1/2"
    - Size and location of sleeves and blockouts....................±1/4"
    - Slab and beam soffits....................1/4" in 10 feet, 3/4" maximum total
21. The Contractor shall design all forms and supporting shores in conformance with ACI 347. Design shall include rate and method of placing concrete and construction loads, including vertical, horizontal, and impact loads. Forms shall be substantial and sufficiently tight to prevent leakage of mortar and properly braced or tied to maintain position and shape.
22. Forms shall be removed in such a manner as not to impair safety and serviceability of the structure. All concrete to be exposed by form removal shall have sufficient strength not to be damaged thereby. Reshore until 28 days after placement , and for full duration where construction loads exceed specified service loads. Reshoring shall conform to ACI 347.

## REINFORCING STEEL

1. Reinforcing steel shall conform to ASTM A615, Grade 60. Reinforcing to be welded or field bent shall be ASTM A706, Grade 60.
2. Welded wire reinforcement (WWR) shall conform to ASTM A185, Fy=65 ksi. WWR must lap one full mesh plus 2" at side and end laps, but not less than 6" and shall be wired together. WWR shall be placed in the center of slabs-on-grade or in the center of the concrete thickness above the deck for slabs on form deck
3. Welding of reinforcing steel shall conform to AWS D1.4, using proper low hydrogen electrodes. All bars to be welded shall conform to ASTM A706.
4. All bars in concrete shall be lapped in accordance with the "Concrete Reinforcing Tension Lap Splice Length (Class B)" schedule provided in these drawings unless specifically noted otherwise.
5. Dowels for walls and columns shall be the same size and spacing as the wall/column reinforcing, unless noted otherwise.
6. All reinforcing bar bends shall be made cold with a bar bender at the ACI 318 specified minimum radius.
7. Extend and anchor all horizontal bars at corners and intersections to fully develop the bar.
8. Detail bars in accordance with the latest editions of the ACI Detailing Manual and ACI Building Code Requirements for Structural Concrete.
9. Provide all accessories necessary to support reinforcing at positions shown on the plan.
10. All stirrups shall have a minimum of 2- #4 horizontal reinforcing bars provided as spacers when no other horizontal reinforcing is provided.

## STRUCTURAL STEEL:

1. All fabrication and erection shall conform to the latest edition of the AISC Manual of Steel Construction.
2. A Certified Welder approved by the authority having jurisdiction in accordance with AWS, Structural Welding Code D1.1, shall perform all welding.
3. Wide flange shapes shall be ASTM A572, Grade 50, ASTM A36 / A572-50, or ASTM A992.
4. Round hollow structural sections shall be ASTM A500 Grade B (42 ksi).
5. Square and rectangular hollow structural sections (HSS) shall be ASTM A500 Grade B (46 ksi).
6. Pipe sections shall be ASTM A53 Grade B (35 ksi).
7. Miscellaneous structural steel such as plates, angles and channels shall conform to multigrade steel (Angles and plates 36 ksi, Channels 50 ksi).
8. All welding electrodes shall conform to ASTM E70XX. The minimum fillet weld size shall be 3/16".
9. Headed anchor studs shall conform to ASTM A108 (60 ksi).
10. Anchor rods and unfinished rods shall conform to ASTM F1554, Grade 36.
11. Bolted connections are to be of high-strength ASTM A325-N bolts, unless noted otherwise. A minimum of two bolts is required for all beam connections. Minimum required connection capacity is 12 kips LRFD factored load unless noted otherwise.
12. High-strength bolts shall conform to the provisions of the "Specification for Structural Joints Using ASTM A325 or A490 Bolts", latest edition, as approved by the Research Council on Riveted and Bolted Structural Joints.
13. All high-strength bolts in bearing type connections shall be snug tight. The snug tight condition is defined as the tightness that exists when all plies in a joint are in firm contact. A few impacts of an impact wrench or the full effort of a man using an ordinary spud wrench may attain this. All high-strength bolts shown on the drawings as slip critical or subject to tension loads shall be tightened to a bolt tension not less than that given in Table 8.1 for the RCSC Specification for Structural Joints using ASTM A325 or A490 bolts. Tightening shall be done by the turn-of-nut method, by a direct tension indicator, or by properly calibrated wrenches. Provide hardened washers under the nut or bolt head, whichever is the element turned in tightening. Bolts not indicated as slip critical shall not be pre-tensioned.
14. Shop drawings for all structural steel indicated on the structural drawings shall be submitted for review to the Structural Engineer prior to fabrication.
15. All structural steel exposed to weather shall be hot-dip galvanized, unless noted otherwise.
16. All structural steel shall be shop coated with an approved rust inhibitive primer. Do not prime beams that are to receive fireproofing. See specifications for additional galvanizing information.
17. No holes other than those specifically detailed shall be allowed through structural steel members. No cutting or burning of structural steel shall be permitted without written consent from the Architect/Engineer.
18. All welding of reinforcing steel bars to structural steel members will require continuous inspection by a qualified Inspector.
19. All members are to be erected with natural mill camber or induced camber up, unless noted otherwise on the plans.
20. Steel joists shall be designed, fabricated and erected in accordance with Steel Joist Institute (SJI) Specification. Where steel joists bear on structural steel framing the joist nearest each column on each side of the beam shall be bolted to the beam. Joist bridging shall conform to SJI specifications unless otherwise shown on plans. Joist supplier shall verify that the metal deck, joists, and joist girders meet any size, spacing, support, and/or bridging restrictions imposed by Underwriters Laboratories designated floor or roof systems listed in the architectural drawings.
21. Joist Supplier shall submit calculations for all non-uniformly loaded joists.
22. Install all required bridging and miscellaneous steel prior to installing deck.
23. Connections shall be as shown in schedules and sections in the drawings. Any changes to the connections proposed by the contractor shall be submitted with the structural steel shop drawings. This connection submittal shall include calculations stamped and signed by the contractor's engineer.
24. Miscellaneous Structural steel
    a. Miscellaneous structural steel includes any steel that is not specifically included in the framing of the building superstructure. Superstructure steel may include beams, columns, trusses, girders, joists, braces and frames.
    b. The structural steel supplier shall supply all necessary steel items, whether indicated on the drawings or not, that fulfill the structural design and architectural design intent for the structure. These items may include edge angles, closure angles, deck support, miscellaneous plates, etc.
    c. Openings in roof or floor decks with concrete may be as shown on structural, architectural, or MEP drawings. If openings are not dimensioned on structural plans, refer to architectural or MEP drawings. Unless noted otherwise, openings in decks 24”x24” or less shall be reinforced with 1- #5 in concrete above flutes on all four sides of opening. Reinforcement shall extend 2’-0” minimum beyond edge of opening or have a standard hook. All openings shall have 2’-0” minimum clear between them. For any opening that does not meet this requirement, refer to plans and details for required reinforcing.
    d. Openings in metal roof deck without concrete may be as shown on structural, architectural, or MEP drawings. If openings are not dimensioned on structural plans, refer to architectural or MEP drawings.

## METAL DECKING:

1. All metal decking shall conform to ASTM 1008 or ASTM A653 and have minimum yield strength of 33 ksi. All composite deck and any deck permanently exposed to weather or moisture shall be galvanized. The galvanized coating shall conform to ASTM A653, G60 or G90.
2. Minimum deck gages are shown on plans and are based on 3-span, unshored conditions. Heavier deck gage may be required for conditions other than these, depending on manufacturer's layout.
3. Deck welding shall be in accordance with AWS D1.3, "Structural Welding Code-Sheet Steel".
4. Contractor shall provide closure plates, flashing and all miscellaneous light gage metal shapes necessary to complete the work. Deck supplier shall provide closures to match adjacent deck gage as required to complete all diaphragm connections.
5. Minimum bearing of decking on supports shall be 1 1/2".
6. Sheets shall be attached to all supporting steel members by welding as indicated on the drawing and in accordance with manufacturer's recommendations.
7. See plans for deck type, gage and fastening. Steel deck shall be fastened to develop a minimum diaphragm shear of 550 plf.
8. Do not suspend hangers for conduit, sprinklers, light fixtures, etc. from the metal decking.
9. Metal decking shall be continuous on main roof below all overframed areas.

## COLD-FORMED STEEL FRAMING:

1. All metallic coated metal studs 16 gage and heavier shall be formed from steel that corresponds to the minimum requirements of ASTM A1003, Grade 50 Type H. All metallic coated 16 gage tracks and heavier shall be formed from steel that corresponds to the requirements of ASTM A570 or A611, Grade 33.
2. All metallic coated 18 gage studs and lighter, all painted track, bridging, end closures and accessories shall be formed from steel that corresponds to the requirements of ASTM A1003, Grade 33, Type H.
3. All galvanized metal studs 16 gage and heavier shall be formed from steel that corresponds to the minimum requirements of ASTM A653, Grade 50. All galvanized 16 gage and heavier tracks shall be formed from steel that corresponds to the requirements of ASTM A653, Grade 33.
4. All galvanized 18 gage studs and lighter, all painted track, bridging, end closures, and accessories shall be formed from steel that corresponds to the requirements of ASTM A653, Grade 33.
5. All painted material and accessories shall be primed with rust inhibitive paint meeting the performance requirements of TT-P-626C.
6. Provide bridging as required by the manufacturer's recommendations.
7. Splices in metal studs, joists, and headers will not be permitted.
8. All corners shall be framed with a minimum of 3 studs of the same gage as wall studs, unless noted otherwise.
9. Multiple studs shall be secured together with either #10 screws at 18" OC staggered or 1½" of weld at each flange @18"OC
10. No holes shall be cut in structural studs, joist or headers without written approval from structural engineer.
11. Web stiffeners shall be constructed of unpunched studs or track, gage to match stud below, unless noted otherwise. No holes are allowed in web stiffeners.
12. Holes in studs are not allowed within 12" of the top or bottom of the stud.
13. Do not bend or cut flanges of studs, joist or headers. Any damaged members shall be replaced.
14. The joist web shall be located directly above the stud web unless noted otherwise.
15. Bracing straps shall be flat with no bows or splices. They shall be attached to all intermediate studs with 2- # 10 screws.
16. Coordinate joist locations with plumbing and mechanical penetrations. Provide additional joists as required to maintain joist spacing.
17. Minimum effective section properties of metal studs shall be as shown in the current Steel Stud Manufacturer's Association (SSMA) Publication: Fy=50 ksi for 16 gage and heavier section, Fy=33 ksi for 18 gage and lighter sections.
18. Metal stud contractor shall submit structural calculations and drawings for all framing members and connections to the Engineer prior to fabrication.

## CONCRETE UNIT MASONRY:

1. Fabrication and placement of all Concrete Masonry Units and reinforcing shall be in accordance with ACI 530 and ACI 530.1 unless noted otherwise.
2. All masonry shall develop a minimum compressive strength, f'm of 1750 psi at 28 days.
3. Concrete block shall be hollow, load-bearing concrete masonry units conforming to ASTM C90 lightweight units, unless noted otherwise.
4. All masonry shall be reinforced grouted masonry. Grout solid all cells specified on plans. As a minimum, grout all cells which contain rebar, bolts, etc. Grout solid all cells below grade. Grouting shall be stopped 1 1/2" below top of course so as to form a key at the pour joint.
5. Mortar shall conform to ASTM C270 Type S with a minimum compressive strength of 1800 psi at 28 days for exterior walls and interior bearing walls, Type M for foundation walls or walls exposed to earth, and Type O or Type S for interior non-bearing walls.
6. Grout shall be self-consolidating and conform to ASTM C476 with a minimum compressive strength of 2000 psi at 28 days.
7. Grout strength test shall be as set forth in ASTM C1019.
8. Aggregates for mortar and grout shall be natural sand and rock conforming to ASTM C144 (mortar) and C404 (grout).
9. Cement shall be Portland Cement conforming to ASTM C150, Type I or II, low alkali.
10. All reinforcement, bolts, etc. shall have minimum grout coverage of 3/4". Reinforcing shall be centered in the cell unless noted otherwise. Reinforcing steel shall be secured in place and inspected prior to grouting.
11. Unless otherwise noted, place continuous bond beam at top of all walls, at suspended floors and at roofs. Reinforce bond beam with 2- #5 bars. At floor and roof levels, bond beam reinforcing shall be continuous through control joints. Elsewhere, bond beam reinforcing shall be discontinuous at control joints. Hook reinforcing at end of wall and make continuous around corners. Step bond beam as required to align with floors and roofs. Lap bond beam 4'-0" at vertical steps.
12. Unless otherwise noted, CMU wall reinforcing shall be as follows:
    a. All walls shall be reinforced with #5 @48” OC vertical maximum
    b. Provide 1- #5 around openings greater than 12" in any dimension and each side of control joints. Extend reinforcing 2'-0" past edge of opening.
    c. Provide 2- #5 vertical at all wall ends
    d. Provide 3- #5 vertical at all wall corners
    e. Horizontal joint reinforcing in all masonry walls shall be 9 gage minimum ladder type spaced @16” OC. Joint reinforcing shall be lapped 8” keeping cell clear of crossing wires.
13. Unless noted otherwise, place continuous bond beam at tops of walls, at suspended floors and roofs, and top course of parapets.
14. See the architectural drawings for finish surface, height of units, laying pattern and joint types. Unless specifically shown otherwise, all concrete block shall be laid in running bond.
15. Cleanouts shall be provided for all grout pours over 5 feet in height. All grout pours greater than 12" require internal mechanical vibration and reconsolidation. Grout pours 12" or less shall be mechanically vibrated or puddled.
16. High lift grouted construction may be used in conformance with IBC requirements.
17. Continuous special inspection shall be provided during preparation and taking of any required prisms or test specimens, at the start of laying of masonry units, after the placement of reinforcement, grout space prior to each grouting operation, and during all grouting operations.
18. Concrete block shall have attained full design compressive strength prior to placement. Date of manufacture shall be stapled to pallets.
19. Concrete block shall be dry at time of placement. Wet or frozen masonry units shall not be placed.
20. Provide 1" soft joint between CMU partitions and all vertical concrete surfaces. See architectural drawings for caulking and fire safing requirements of soft joints.
21. Anchored Brick/Stone Veneer:
    Unless noted otherwise, brick and/or stone veneer shall be anchored as follows:
    a. Anchors for veneer shall be two-piece, adjustable anchors with minimum W1.7 wire size. Anchors shall be submitted to architect for approval prior to installation.
    b. Anchor spacing
       1. Maximum spacing shall be 24” OC vertical and 16” OC horizontal
       2. For seismic design categories D, E and F, maximum spacing shall be 16” OC vertical and 16” OC horizontal. See general section for seismic design category.
    c. Backing of brick/stone veneer shall be spaced @16” OC maximum. Cold-formed steel backing shall be 18 ga minimum and galvanized. All backing shall be fastened to structural framing with minimum #10 screws.
    d. Loose lintels shall be as specified in the Loose Lintel Schedule. All lintels and relief angles shall be galvanized. Provide a 3/8” minimum gap between bottom of relief angle and top of veneer below.

TAB
Associates
*The Architectural Balance*
0056 Edwards Village Blvd.
Suite 210
Edwards, CO 8132
(970) 766-1470
fax: (970) 766-1471
email: tab@vail.net
www.tabassociates.com

Civil Engineer
Alpine Engineering, Inc.
970-926-3373
Structural Engineer
Jirsa Hedrick Structural Eng.
303-318-6539
Mechanical Engineer
BG BuildingWorks, Inc.
970-949-6109
Electrical Engineer
BG BuildingWorks, Inc.
970-949-6108

Seal
COLORADO LICENSED
MATTHEW OLIVER HOOD
44113
PROFESSIONAL ENGINEER
4/6/20

**Strawberry Park Elementary**
**39620 Amethyst Drive**
**Steamboat Springs, CO**

| Revisions: | | |
|---|---|---|
| No | Description | Date |
| | | |
| | | |
| | | |
| | | |
| | | |
| | | |
| | | |
| | | |

Issue Dates:
DD's - 2/20/20
95% - 03/30/20
CD's - 04/06/20

Sheet Title:
**General Notes**

Project No:
TAB-1935.02
JH-20191103

Sheet No:
S1.0

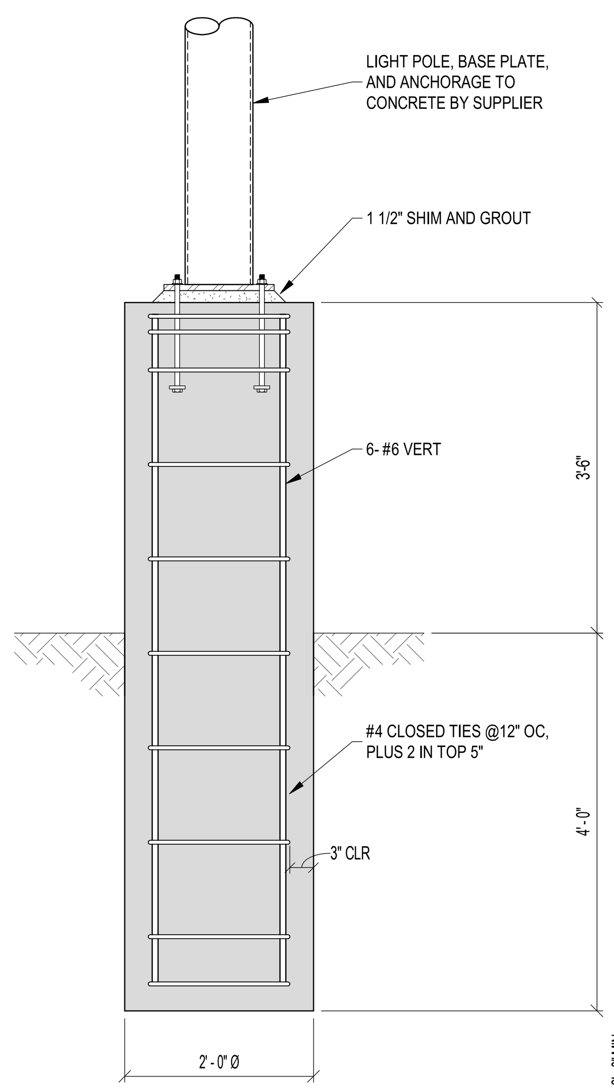


20 LIGHT POLE BASE
3/4" = 1'-0"

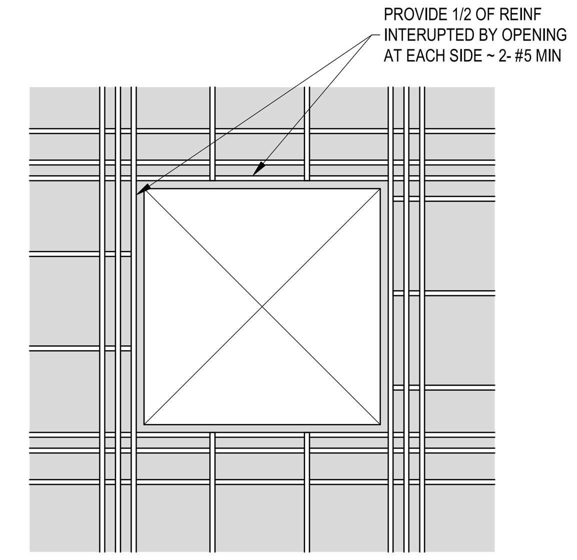


16 CONCRETE WALL AT OPENINGS 12" - 48"
3/4" = 1'-0"

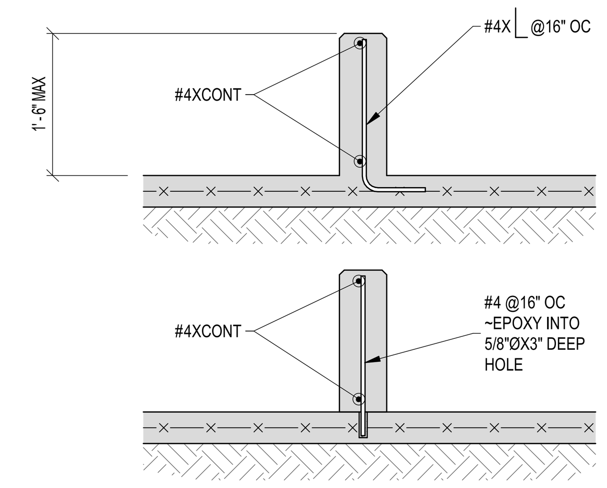


11 CURBS / MONOLITHIC & POST-INSTALLED
3/4" = 1'-0"

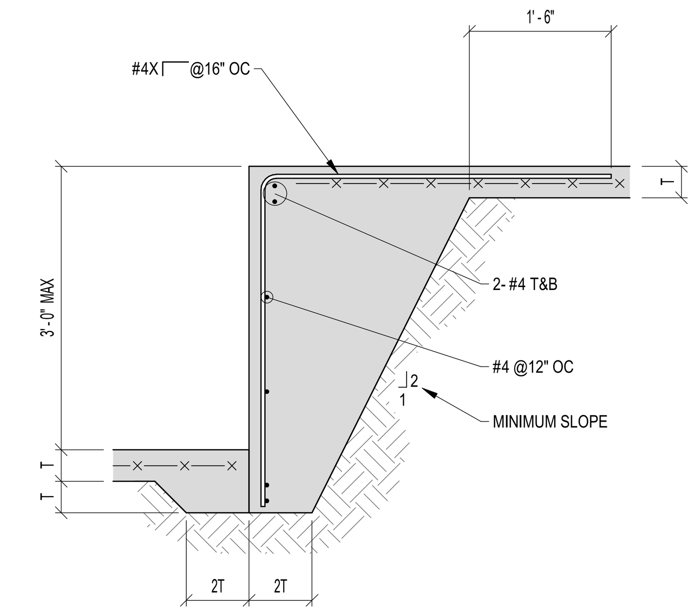


6 LARGE SLAB STEP - TYPE 1
3/4" = 1'-0"

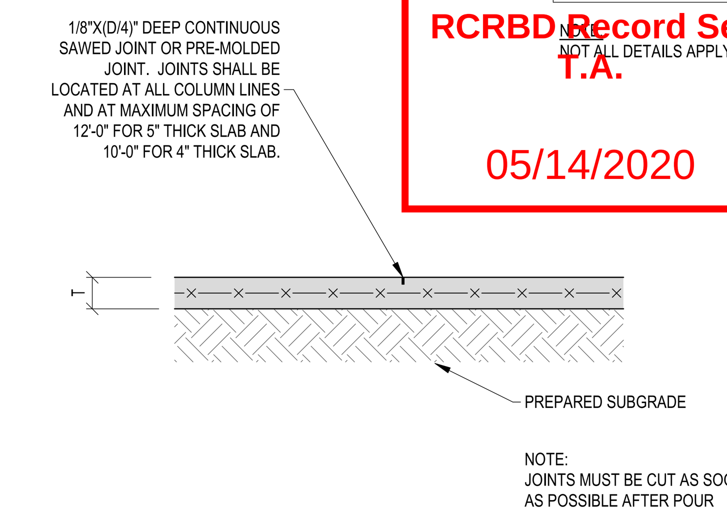


1 CONTROL JOINT
3/4" = 1'-0"

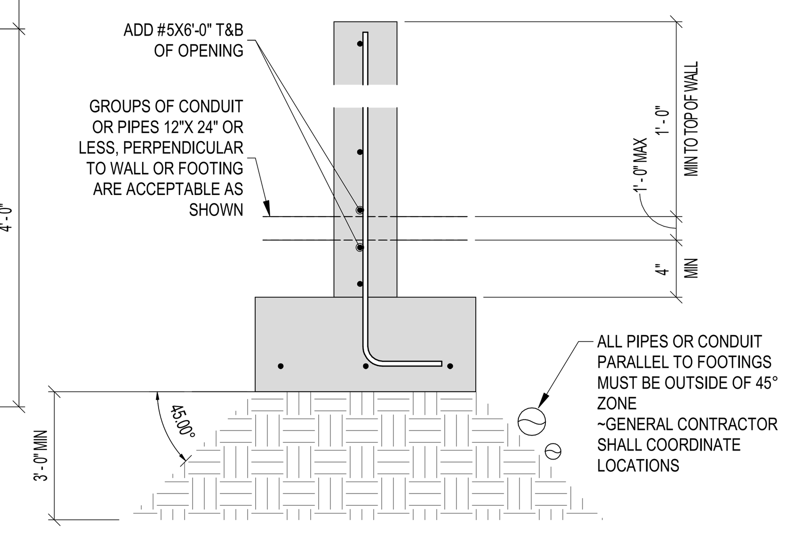


17 PIPE/CONDUIT ADJACENT TO FOOTINGS
3/4" = 1'-0"

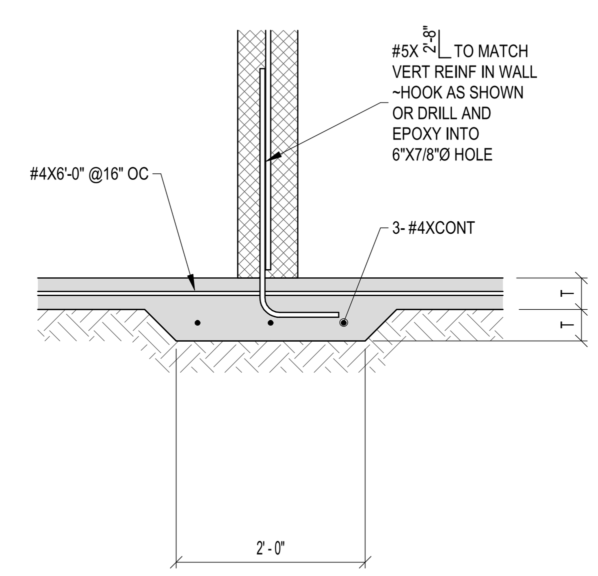


12 CMU WALL BEARING
3/4" = 1'-0"

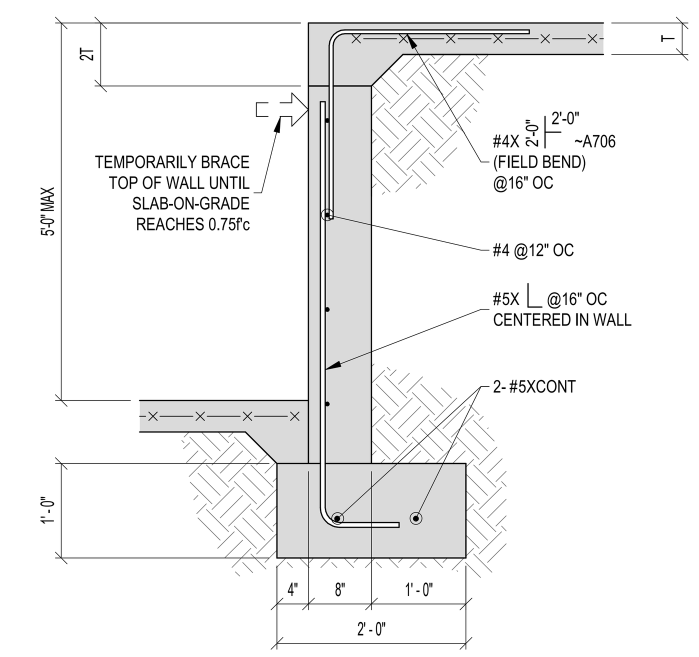


7 LARGE SLAB STEP - TYPE 2
3/4" = 1'-0"

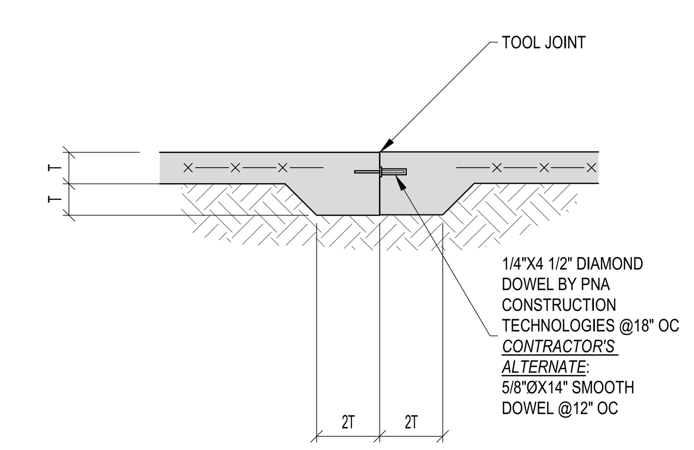


2 CONSTRUCTION JOINT
3/4" = 1'-0"

## CONCRETE REINFORCING TENSION LAP SPLICE LENGTH (CLASS B) - 60 ksi REBAR

| BAR SIZE ENGLISH (METRIC) | f'c=3000 psi (3/4" COVER) | | f'c=3000 psi (1 1/2" COVER) | | f'c=3000 psi (2" COVER) | | STD HOOK LENGTH | ℓdh (f'c = 3000psi) |
|---|---|---|---|---|---|---|---|---|
| | TOP BARS | OTHER BARS | TOP BARS | OTHER BARS | TOP BARS | OTHER BARS | | |
| #3 (10) | 17 | 13 | 17 | 13 | 17 | 13 | 6 | 6 |
| #4 (13) | 29 | 22 | 23 | 17 | 23 | 17 | 8 | 8 |
| #5 (16) | 42 | 32 | 28 | 22 | 28 | 22 | 10 | 10 |
| #6 (19) | 56 | 43 | 34 | 26 | 34 | 26 | 12 | 12 |
| #7 (22) | 90 | 69 | 55 | 43 | 49 | 38 | 14 | 14 |
| #8 (25) | 112 | 86 | 70 | 54 | 56 | 43 | 16 | 16 |
| #9 (29) | 135 | 104 | 86 | 66 | 69 | 53 | 19 | 18 |
| #10 (32) | 163 | 125 | 105 | 81 | 85 | 66 | 22 | 20 |
| #11 (36) | 190 | 146 | 126 | 97 | 102 | 79 | 24 | 22 |

| BAR SIZE ENGLISH (METRIC) | f'c=4000 psi (3/4" COVER) | | f'c=4000 psi (1 1/2" COVER) | | f'c=4000 psi (2" COVER) | | STD HOOK LENGTH | ℓdh (f'c = 4000psi) |
|---|---|---|---|---|---|---|---|---|
| | TOP BARS | OTHER BARS | TOP BARS | OTHER BARS | TOP BARS | OTHER BARS | | |
| #3 (10) | 16 | 12 | 15 | 12 | 15 | 12 | 6 | 6 |
| #4 (13) | 25 | 19 | 20 | 15 | 20 | 15 | 8 | 7 |
| #5 (16) | 36 | 28 | 24 | 19 | 24 | 19 | 10 | 9 |
| #6 (19) | 48 | 37 | 29 | 23 | 29 | 23 | 12 | 10 |
| #7 (22) | 78 | 60 | 48 | 37 | 42 | 33 | 14 | 12 |
| #8 (25) | 96 | 74 | 61 | 47 | 49 | 37 | 16 | 14 |
| #9 (29) | 117 | 90 | 75 | 57 | 60 | 46 | 19 | 15 |
| #10 (32) | 140 | 108 | 91 | 70 | 74 | 57 | 22 | 17 |
| #11 (36) | 165 | 127 | 109 | 84 | 89 | 68 | 24 | 19 |

| BAR SIZE ENGLISH (METRIC) | f'c=5000 psi (3/4" COVER) | | f'c=5000 psi (1 1/2" COVER) | | f'c=5000 psi (2" COVER) | | STD HOOK LENGTH | ℓdh (f'c = 5000psi) |
|---|---|---|---|---|---|---|---|---|
| | TOP BARS | OTHER BARS | TOP BARS | OTHER BARS | TOP BARS | OTHER BARS | | |
| #3 (10) | 16 | 12 | 13 | 12 | 13 | 12 | 6 | 6 |
| #4 (13) | 22 | 17 | 18 | 14 | 18 | 14 | 8 | 6 |
| #5 (16) | 33 | 25 | 22 | 17 | 22 | 17 | 10 | 8 |
| #6 (19) | 44 | 34 | 26 | 20 | 26 | 20 | 12 | 9 |
| #7 (22) | 70 | 54 | 43 | 33 | 38 | 29 | 14 | 11 |
| #8 (25) | 87 | 67 | 54 | 42 | 43 | 33 | 16 | 12 |
| #9 (29) | 105 | 81 | 67 | 51 | 54 | 41 | 19 | 14 |
| #10 (32) | 126 | 97 | 82 | 63 | 66 | 51 | 22 | 16 |
| #11 (36) | 148 | 114 | 97 | 75 | 79 | 61 | 24 | 17 |

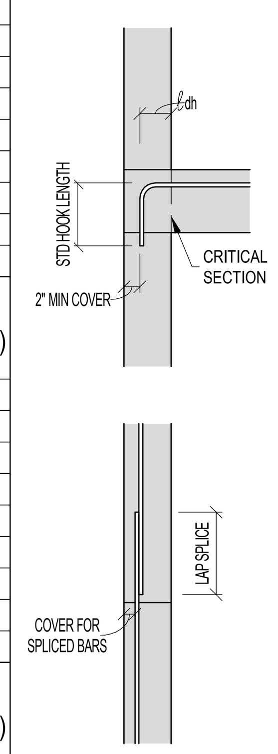


TYPICAL DETAILS

NOTES:
1. TABULATED VALUES ARE BASED ON NON-EPOXY COATED GRADE 60 REINFORCING BARS AND NORMAL WEIGHT CONCRETE. LENGTHS ARE IN INCHES.
2. TENSION DEVELOPMENT LENGTHS AND TENSION LAP SPLICE LENGTHS ARE CALCULATED PER ACI 318-14.
3. CLEAR SPACING OF BARS MUST BE AT LEAST DOUBLE THE CONCRETE COVER.
4. TOP BARS ARE HORIZONTAL BARS WITH MORE THAN 12 INCHES OF CONCRETE CAST BELOW THE BARS.
5. FOR LIGHT WEIGHT AGGREGATE CONCRETE, MULTIPLY THE TABULATED VALUES BY 1.33.
6. DEVELOPMENT LENGTH (ℓd) = TENSION LAP SPLICE LENGTH DIVIDED BY 1.3 BUT NOT LESS THAN 12" MINIMUM.
7. MINIMUM COVER FOR ℓdh IS 2 1/2" MEASURED NORMAL TO THE PLANE OF THE HOOKED BAR (SIDE COVER).
8. SEE CONCRETE COLUMN SCHEDULE FOR COMPRESSION LAP SPLICE LENGTHS.

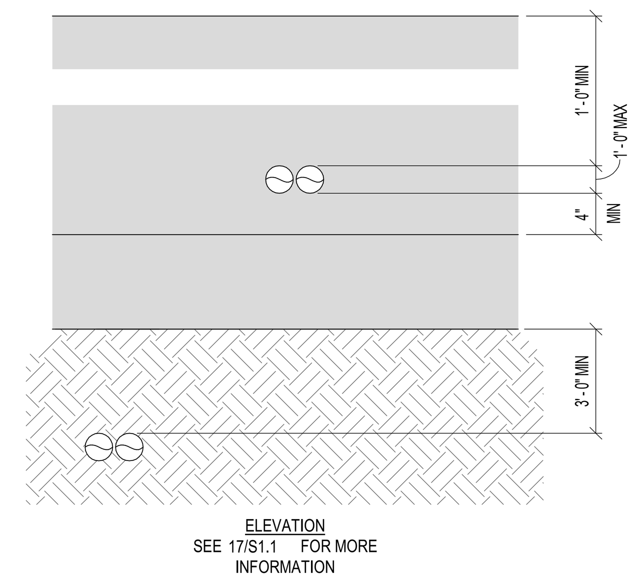


18 PIPE/CONDUIT ADJACENT TO FOOTINGS
3/4" = 1'-0"

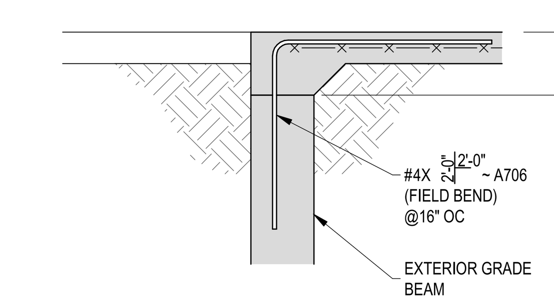


13 THRESHOLD
3/4" = 1'-0"

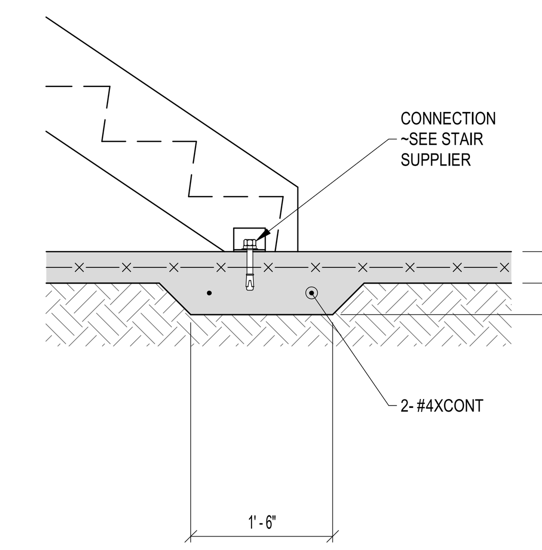


8 THICKENED SLAB AT STAIR BASE
3/4" = 1'-0"

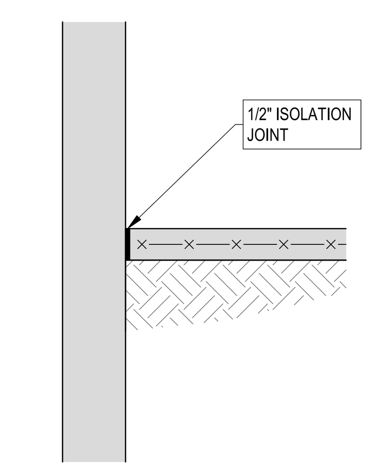


3 SLAB-ON-GRADE ABUTTING VERTICAL CONCRETE
3/4" = 1'-0"

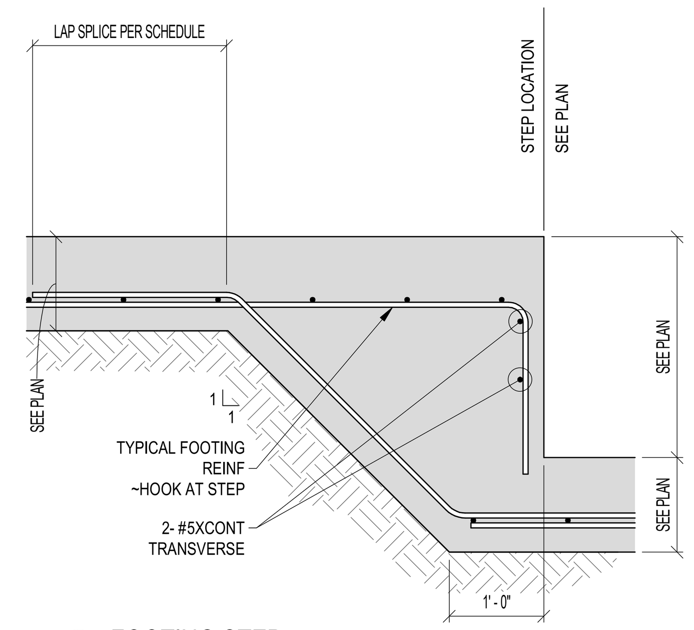


19 FOOTING STEP
3/4" = 1'-0"

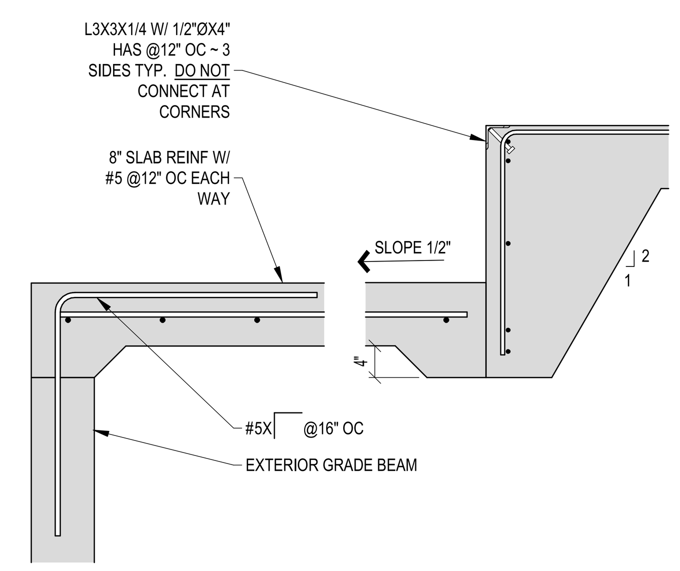


14 DOCK LEVELER
3/4" = 1'-0"

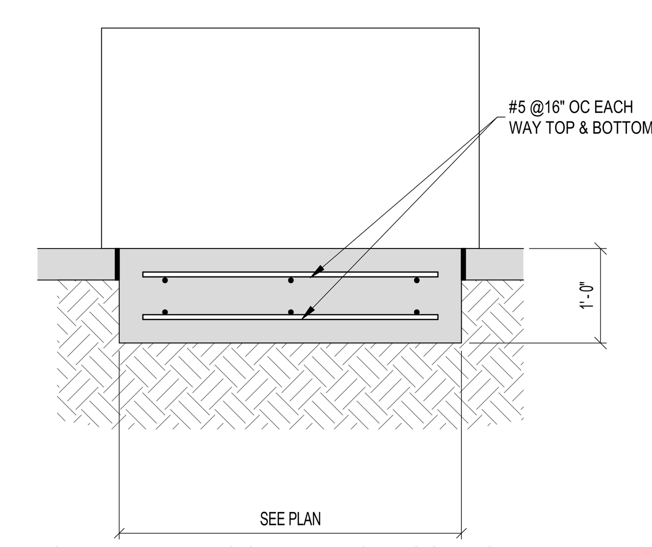


9 EQUIPMENT PADS / FIREPLACE FOOTING
3/4" = 1'-0"

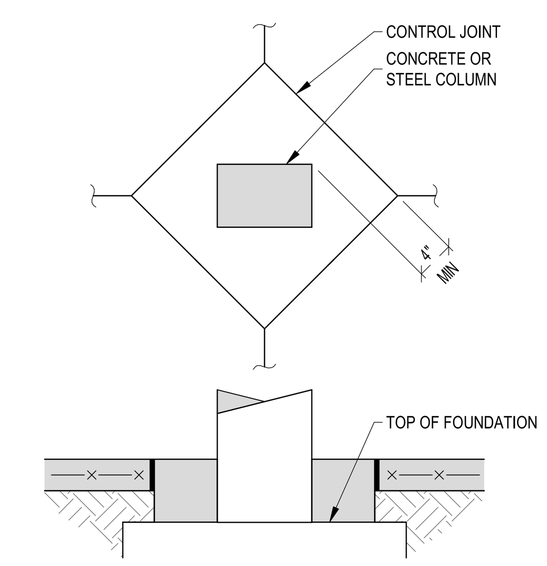


4 DIAMOND BLOCKOUT AROUND COLUMNS
3/4" = 1'-0"

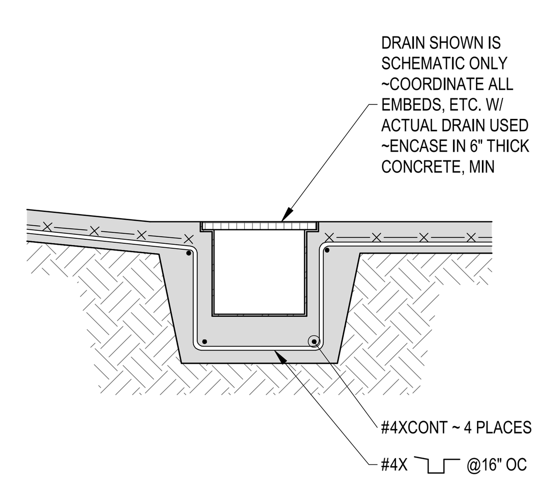


15 TRENCH DRAIN
3/4" = 1'-0"

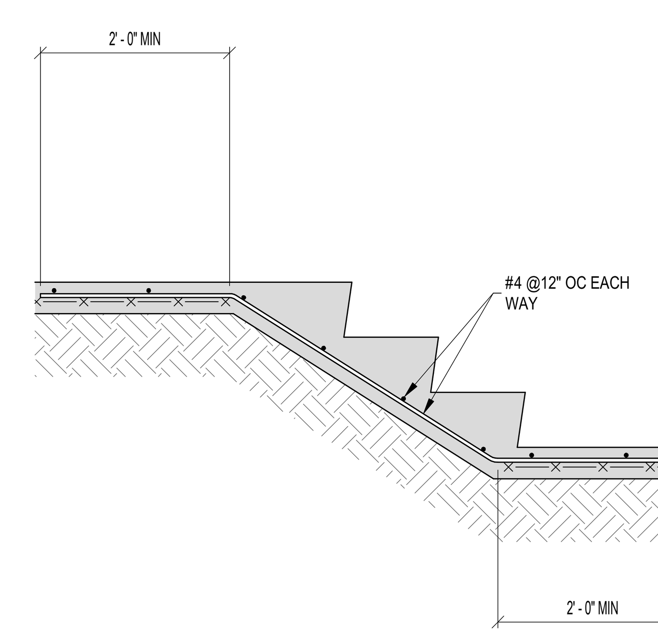


10 STAIR ON GRADE
3/4" = 1'-0"

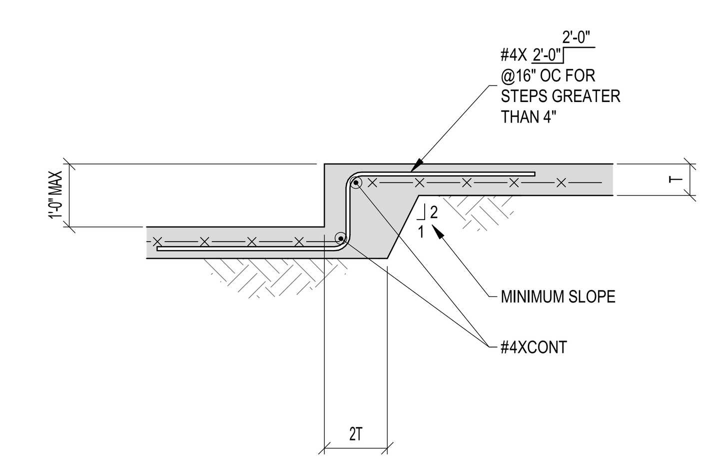


5 SMALL SLAB STEP
3/4" = 1'-0"

BOXED NOTES INDICATE A TYPICAL CONDITION EXISTS UNLESS NOTED OTHERWISE

NOTE:
NOT ALL DETAILS APPLY

RCRBD Record Set
T.A.
05/14/2020

TAB Associates
*The Architectural Balance*
0056 Edwards Village Blvd.
Suite 210
Edwards, CO 8132
(970) 766-1470
fax: (970) 766-1471
email: tab@vail.net
www.tabassociates.com

Civil Engineer
Alpine Engineering, Inc.
970-926-3373
Structural Engineer
Jirsa Hedrick Structural Eng.
303-318-6539
Mechanical Engineer
BG BuildingWorks, Inc.
970-949-6109
Electrical Engineer
BG BuildingWorks, Inc.
970-949-6108

Seal
COLORADO LICENSED PROFESSIONAL ENGINEER
MATTHEW OLIVER HOOD
44113
4/6/20

**Strawberry Park Elementary**
**39620 Amethyst Drive**
**Steamboat Springs, CO**

| Revisions: | | |
|---|---|---|
| No | Description | Date |

Issue Dates:
DD's - 2/20/20
95% - 03/30/20
CD's - 04/06/20

Sheet Title:
**Slab-On-Grade and Typical Concrete Details**

Project No:
TAB-1935.02
JH-20191103

Sheet No:
S1.1

# LOOSE LINTEL SCHEDULE

| OPENING SIZE | LOOSE LINTEL | | COMMENTS |
|---|---|---|---|
| | LINTEL | BEARING EACH END | |
| 4'-0" OR LESS | L3 1/2X3X1/4 LLH | 6" | |
| 4'-0" TO 6'-8" | L3 1/2X3 1/2X1/4 | 6" | |
| 6'-8" TO 8'-4" | L5X3 1/2X1/4 LLV | 6" | |
| 8'-4" TO 10'-0" | L6X3 1/2X5/16 LLV | 6" | |
| 10'-0" TO 12'-6" | W8X15 WITH 1/4" PLATE BOTTOM | 8" | PROVIDE FOR DOUBLE WINDOW AT SOUTH WALL OF ADDITION |
| > 12'-6" | SEE PLANS | | |

NOTES:
1. PROVIDE 1 STEEL ANGLE FOR EACH 4" WIDTH OR LESS OF MASONRY.
2. PROVIDE 1 STEEL BEAM FOR MASONRY WIDTH OF 8" TO 12".
3. FOR OPENINGS 8'-0" WIDE OR LESS, BLOCKS AT BEARING MUST BE SOLID OR HAVE CELLS GROUTED SOLID FOR A HEIGHT OF 16" BELOW BEARING ELEVATION.
4. FOR OPENINGS OVER 8'-0" WIDE, REINFORCE WITH 1- #5 AND GROUT THE MASONRY CELL UNDER LINTEL BEARING SOLID ON EACH SIDE OF THE OPENING.
5. FOR OPENINGS OVER 10'-0", PROVIDE 2- 3/4"Ø X1'-0" ANCHOR BOLTS EACH END OF LINTEL. SLOT HOLES IN BEAM.
6. JAMB CELLS SHALL BE SOLID GROUTED AND REINFORCED IN ACCORDANCE WITH GENERAL NOTES, PLANS AND DETAILS.
7. DESIGN ASSUMES A 60 DEGREE LOADING TRIANGLE AND NO LEDGER LOADS OR CONCENTRATED LOADS SUPPORTED BY THE LINTEL. f'm = 1350 psi MIN.

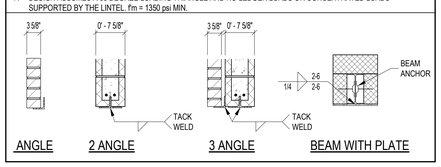


# SINGLE PLATE W/ 3/4"Ø A325-N BOLTS - LRFD

BEAM TO GIRDER OR COLUMN CONNECTION

UNCOPED AND TOP COPED

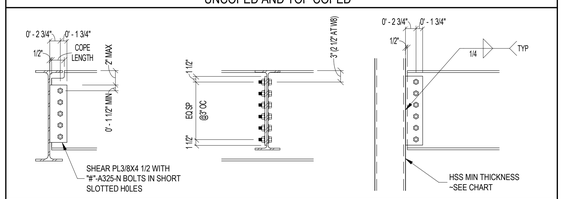


| "#"- 3/4"Ø A325-N BOLTS | BEAM SIZES | MIN BEAM WEB THICKNESS | UNCOPED CAPACITY (KIPS) | 3" COPE CAPACITY (KIPS) | 4" COPE CAPACITY (KIPS) | 5" COPE CAPACITY (KIPS) | 6" COPE CAPACITY (KIPS) | 8" COPE CAPACITY (KIPS) |
|---|---|---|---|---|---|---|---|---|
| 2 | MC8's, MC10's, MC12's, W8×10, W10×12 | 0.170 | 29 | 25 | 20 | 16 | 14 | 11 |
| 2 | C8's, C10's, W8×13 AND HEAVIER, W10×15 AND HEAVIER, W10's, W12's | 0.230 (W12's≥0.20) | 31 | 31 | 28 | 23 | 19 | 15 |
| 3 | W12×14, W12×16 | 0.200 | 47 | 42 | 42 | 38 | 32 | 22 |
| 3 | W12×19 AND HEAVIER, C12's, C15's, W14's, W16's, W18's | 0.230 | 47 | 47 | 47 | 47 | 42 | 32 |
| 4 | W16's, W18's, W21's, W24's, C18's | 0.250 | 63 | 63 | 63 | 63 | 63 | 58 |
| 5 | W18's, W21's, W24's, W27's, W30's | 0.300 | 79 | - | 79 | 79 | 79 | 79 |
| 6 | W21's, W24's, W30's, W33's, W36's | 0.350 | 95 | - | 95 | 95 | 95 | 95 |
| 7 | W24's, W27's, W30's, W33's, W36's, W40's | 0.395 | 111 | - | - | 111 | 111 | 111 |
| 8 | W27's, W30's, W33's, W36's, W40's | 0.460 | 127 | - | - | - | 127 | 127 |
| 9 | W33's, W36's, W40's | 0.550 | 143 | - | - | - | 143 | 143 |
| 10 | W36's, W40's | 0.630 | 159 | - | - | - | 159 | 159 |

| HSS MIN WIDTH | MIN WALL THICKNESS |
|---|---|
| HSS3× - HSS6× | 0.1875 |
| HSS7× - HSS8× | 0.25 |
| HSS10× | 0.3125 |
| HSS12× | 0.375 |
| HSS14× - HSS16× | 0.50 |
| IF WALL THICKNESS < REQ'D FOR HSS10 AND UP, USE ANGLE CONNECTIONS | |

NOTES:
1. LRFD CAPACITIES ARE BASED ON THE AISC MANUAL FOR STEEL CONSTRUCTION - THIRTEENTH EDITION FOR STRENGTH (LRFD) LOADS.
2. Fy OF BEAMS AND GIRDERS = 50 ksi.
   Fy OF CONNECTION ANGLES = 36 ksi.
3. GIRDER WEB THICKNESS MUST BE ≥ BEAM WEB THICKNESS.
4. INTERPOLATION BETWEEN WEB THICKNESSES GIVEN IS NOT PERMITTED.
5. BEAMS MAY BE SKEWED UP TO 15°.

# SINGLE PLATE W/ 3/4"Ø A325-N BOLTS - LRFD

BEAM TO GIRDER OR COLUMN CONNECTION

DOUBLE COPED

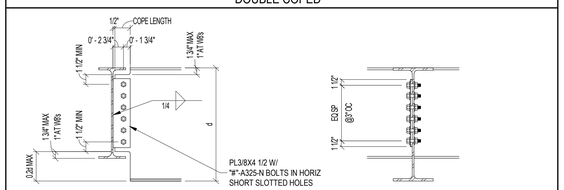


| "#"- 3/4"Ø A325-N BOLTS | BEAM SIZES | MIN BEAM WEB THICKNESS | 3" COPE CAPACITY (KIPS) | 4" COPE CAPACITY (KIPS) | 5" COPE CAPACITY (KIPS) | 6" COPE CAPACITY (KIPS) | 8" COPE CAPACITY (KIPS) |
|---|---|---|---|---|---|---|---|
| 2 | W8's, MC10's, MC12's | 0.170 | 12 | 9 | 8 | 6 | 5 |
| 2 | W10's[6], C10's[5] | 0.190 | 19 | 14 | 12 | 10 | 7 |
| 3 | W12×14[6], W12×16 | 0.200 | 33 | 26 | 21 | 18 | 13 |
| 3 | W12×19 AND HEAVIER[6], C12's, C15's, W14's, W16's, W18's | 0.230 | 42 | 33 | 27 | 22 | 17 |
| 4 | W16's, W18's, W21's, W24's, C18's | 0.250 | 63 | 62 | 50 | 42 | 32 |
| 5 | W18's[6], W21's, W24's, W27's, W30's | 0.300 | 79 | 79 | 79 | 74 | 57 |
| 6 | W21's, W24's, W27's, W30's, W33's, W36's | 0.350 | 95 | 95 | 95 | 95 | 95 |
| 7 | W24's, W27's[6], W30's, W33's, W36's | 0.395 | - | 111 | 111 | 111 | 111 |
| 8 | W27's[6], W30's, W33's, W36's, W40's | 0.460 | - | - | 127 | 127 | 127 |
| 9 | W30's[6], W33's, W36's, W40's | 0.470 | - | - | 143 | 143 | 143 |
| 10 | W33's[6], W36's, W40's | 0.550 | - | - | - | 159 | 159 |
| 11 | W36's[6], W40's | 0.600 | - | - | - | 175 | 175 |

NOTES:
1. LRFD CAPACITIES ARE BASED ON THE AISC MANUAL FOR STEEL CONSTRUCTION - THIRTEENTH EDITION FOR STRENGTH (LRFD) LOADS.
2. Fy OF BEAMS AND GIRDERS = 50 ksi.
   Fy OF CONNECTION PLATES = 36 ksi.
3. GIRDER WEB THICKNESS MUST BE ≥ BEAM WEB THICKNESS.
4. INTERPOLATION BETWEEN WEB THICKNESSES GIVEN IS NOT PERMITTED.
5. 1 1/2" COPE DEPTH.
6. BEAMS MAY BE SKEWED UP TO 30° FROM PERPENDICULAR WITH NO REDUCTION IN CAPACITY OR INCREASE IN WELD SIZE.

# SINGLE ANGLE W/ 3/4"Ø A325-N BOLTS - LRFD

BEAM TO GIRDER CONNECTION

TOP COPED ONLY - BEAM UPSET 2 1/2"

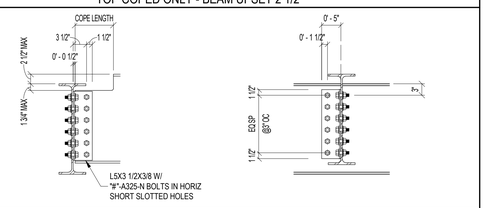


| "#"- 3/4"Ø A325-N BOLTS | BEAM SIZES | MIN BEAM WEB THICKNESS | MAX COPE LENGTH | LRFD CAPACITY (KIPS) |
|---|---|---|---|---|
| 2 | W12's | 0.200 | 6" | 11 |
| 3 | W14's, W16's, W18's | 0.230 | 6" | 23 |
| 4 | W18's, W21's, W24's, C18's | 0.300 | 6" | 38 |
| 5 | W21's, W24's, W27's, W30's | 0.350 | 10" | 54 |
| 6 | W24's, W27's, W30's, W33's, W36's | 0.395 | 10" | 71 |
| 7 | W27's, W30's, W33's, W36's, W40's | 0.460 | 10" | 88 |
| 8 | W30's, W33's, W36's, W40's | 0.470 | 10" | 105 |
| 9 | W33's, W36's, W40's | 0.550 | 10" | 122 |
| 10 | W36's, W40's | 0.600 | 10" | 139 |
| 11 | W40's | 0.630 | 10" | 156 |

NOTES:
1. LRFD CAPACITIES ARE BASED ON THE AISC MANUAL FOR STEEL CONSTRUCTION - THIRTEENTH EDITION FOR STRENGTH (LRFD) LOADS.
2. Fy OF BEAMS AND GIRDERS = 50 ksi.
   Fy OF CONNECTION ANGLES = 36 ksi.
3. GIRDER WEB THICKNESS MUST BE > BEAM WEB THICKNESS.
4. INTERPOLATION BETWEEN WEB THICKNESSES GIVEN IS NOT PERMITTED.

# SINGLE ANGLE W/ 3/4"Ø A325-N BOLTS - LRFD

BEAM TO GIRDER CONNECTION

DOUBLE COPED

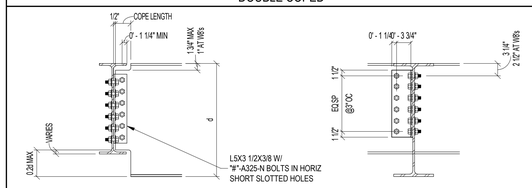


| "#"- 3/4"Ø A325-N BOLTS | BEAM SIZES | MIN BEAM WEB THICKNESS | 3" COPE CAPACITY (KIPS) | 4" COPE CAPACITY (KIPS) | 5" COPE CAPACITY (KIPS) | 6" COPE CAPACITY (KIPS) | 8" COPE CAPACITY (KIPS) |
|---|---|---|---|---|---|---|---|
| 2 | W8's, MC10's, MC12's | 0.170 | 12 | 9 | 8 | 6 | 5 |
| 2 | W10's, C10's | 0.190 | 11 | 11 | 10 | 8 | 6 |
| 3 | W12×14, W12×16 | 0.200 | 23 | 23 | 19 | 16 | 12 |
| 3 | W12×19 AND HEAVIER, C12's, C15's, W14's, W16's, W18's | 0.230 | 23 | 23 | 23 | 21 | 16 |
| 4 | W16's, W18's, W21's, W24's, C18's | 0.250 | 38 | 38 | 38 | 38 | 32 |
| 5 | W18's, W21's, W24's, W27's, W30's | 0.300 | 54 | 54 | 54 | 54 | 54 |
| 6 | W21's, W24's, W27's, W30's, W33's, W36's | 0.350 | 71 | 71 | 71 | 71 | 71 |
| 7 | W24's, W27's, W30's, W33's, W36's | 0.395 | - | 88 | 88 | 88 | 88 |
| 8 | W27's, W30's, W33's, W36's, W40's | 0.460 | - | - | 105 | 105 | 105 |
| 9 | W30's, W33's, W36's, W40's | 0.550 | - | - | - | 122 | 122 |
| 10 | W33's, W36's, W40's | 0.600 | - | - | - | 139 | 139 |
| 11 | W36's, W40's | 0.630 | - | - | - | 156 | 156 |

NOTES:
1. LRFD CAPACITIES ARE BASED ON THE AISC MANUAL FOR STEEL CONSTRUCTION - THIRTEENTH EDITION FOR STRENGTH (LRFD) LOADS.
2. Fy OF BEAMS AND GIRDERS = 50 ksi.
   Fy OF CONNECTION ANGLES = 36 ksi.
3. GIRDER WEB THICKNESS MUST BE > BEAM WEB THICKNESS.
4. INTERPOLATION BETWEEN WEB THICKNESSES GIVEN IS NOT PERMITTED.

# SINGLE ANGLE W/ 3/4"Ø A325-N BOLTS - LRFD

BEAM TO GIRDER OR COLUMN CONNECTION

UNCOPED AND TOP COPED

RCRBD Record Set
T.A.
05/14/2020

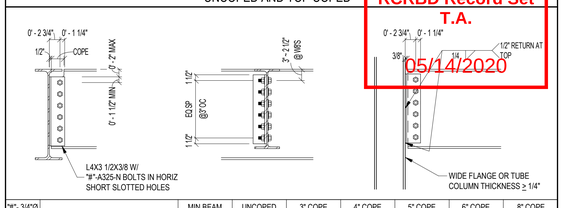


| "#"- 3/4"Ø A325-N BOLTS | BEAM SIZES | MIN BEAM WEB THICKNESS | UNCOPED CAPACITY (KIPS) | 3" COPE CAPACITY (KIPS) | 4" COPE CAPACITY (KIPS) | 5" COPE CAPACITY (KIPS) | 6" COPE CAPACITY (KIPS) | 8" COPE CAPACITY (KIPS) |
|---|---|---|---|---|---|---|---|---|
| 2 | MC8's, MC10's, MC12's, W8X10, W10X12 | 0.170 | 29 | 25 | 20 | 17 | 14 | 11 |
| 2 | C8's, C10's, W8×13 AND HEAVIER, W10X15 AND HEAVIER, W12's | 0.230 (W12's≥0.20) | 31 | 31 | 28 | 23 | 19 | 15 |
| 3 | W12X14, W12X16 | 0.200 | 47 | 44 | 44 | 40 | 34 | 23 |
| 3 | W12X19 AND HEAVIER, C12's, C15's, W14's, W16's, W18's | 0.230 | 47 | - | - | 47 | 44 | 33 |
| 4 | W16's, W18's, W21's, W24's, C18's | 0.250 | 63 | - | - | - | 63 | 60 |
| 5 | W18's, W21's, W24's, W27's, W30's | 0.300 | 79 | - | - | - | - | 79 |
| 6 | W21's, W24's, W30's, W33's, W36's | 0.350 | 95 | - | - | - | - | 95 |
| 7 | W24's, W27's, W30's, W33's, W36's, W40's | 0.395 | 111 | - | - | - | - | 111 |
| 8 | W27's, W30's, W33's, W36's, W40's | 0.460 | 127 | - | - | - | - | 127 |
| 9 | W30's, W33's, W36's, W40's | 0.470 | 143 | - | - | - | - | 143 |
| 10 | W33's, W36's, W40's | 0.550 | 159 | - | - | - | - | 159 |
| 11 | W36's, W40's | 0.600 | 175 | - | - | - | - | 175 |

NOTES:
1. LRFD CAPACITIES ARE BASED ON THE AISC MANUAL FOR STEEL CONSTRUCTION - THIRTEENTH EDITION.
2. Fy OF BEAMS AND GIRDERS = 50 ksi.
   Fy OF CONNECTION ANGLES = 36 ksi.
3. GIRDER WEB, COLUMN WEB OR FLANGE THICKNESS MUST BE > BEAM WEB THICKNESS.
4. INTERPOLATION BETWEEN WEB THICKNESSES GIVEN IS NOT PERMITTED.

# SINGLE ANGLE W/ 3/4"Ø A325-N BOLTS - LRFD

BEAM TO GIRDER OR COLUMN CONNECTION

UNCOPED AND TOP COPED ONLY

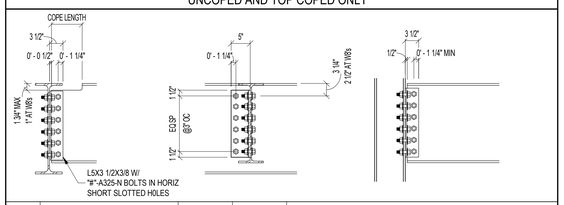


| "#"- 3/4"Ø A325-N BOLTS | BEAM SIZES | MIN BEAM WEB THICKNESS | 0" TO 6" COPE CAPACITY (KIPS) |
|---|---|---|---|
| 2 | W8's, W10's, W12's, C8's, C10's, MC8's, MC10's, MC12's, | 0.170 | 11 |
| 3 | W12's, W14's, W16's, W18's, C15's | 0.200 | 23 |
| 4 | W16's, W18's, W21's, W24's, C18's | 0.250 | 38 |
| 5 | W18's, W21's, W24's, W27's, W30's | 0.300 | 54 |
| 6 | W21's, W24's, W30's, W33's, W36's | 0.350 | 71 |
| 7 | W24's, W27's, W30's, W33's, W36's, W40's | 0.395 | 88 |
| 8 | W27's, W30's, W33's, W36's, W40's | 0.460 | 105 |
| 9 | W33's, W36's, W40's | 0.550 | 122 |
| 10 | W36's, W40's | 0.600 | 139 |
| 11 | W40's | 0.630 | 156 |

NOTES:
1. LRFD CAPACITIES ARE BASED ON THE AISC MANUAL FOR STEEL CONSTRUCTION - THIRTEENTH EDITION FOR STRENGTH (LRFD) LOADS
2. Fy OF BEAMS AND GIRDERS = 50 ksi.
   Fy OF CONNECTION ANGLES = 36 ksi.
3. GIRDER WEB, COLUMN WEB OR FLANGE THICKNESS MUST BE > BEAM WEB THICKNESS.
4. INTERPOLATION BETWEEN WEB THICKNESSES GIVEN IS NOT PERMITTED.


TAB Associates
*The Architectural Balance*
0056 Edwards Village Blvd.
Suite 210
Edwards, CO 81632
(970) 766-1470
fax: (970) 766-1471
email: tab@vail.net
www.tabassociates.com

Civil Engineer
Alpine Engineering, Inc.
970-926-3373
Structural Engineer
Jirsa Hedrick Structural Eng.
303-318-6539
Mechanical Engineer
BG BuildingWorks, Inc.
970-949-6109
Electrical Engineer
BG BuildingWorks, Inc.
970-949-6108


Seal

COLORADO LICENSED
MICHAEL OLIVER JIRSA
44113
PROFESSIONAL ENGINEER
6/20

**Strawberry Park Elementary**
**39620 Amethyst Drive**
**Steamboat Springs, CO**

Revisions:

| No | Description | Date |
|---|---|---|
| | | |

Issue Dates:
DD's - 2/20/20
95% - 03/30/20
CD's - 04/06/20

Sheet Title:
**Steel Connection Schedules**

Project No:
TAB-1935.02
JH-20191103

Sheet No:
S1.2

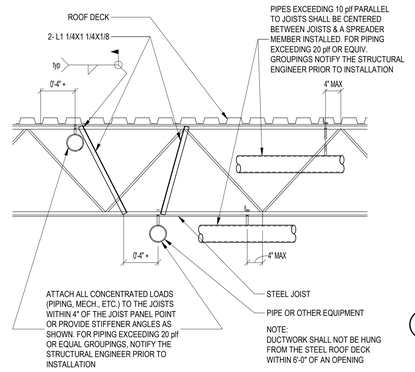


11 JOIST REINFORCEMENT AT PIPING
3/4" = 1'-0"

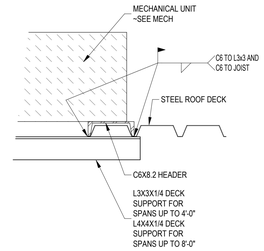


6 STEEL CHANNEL MECHANICAL UNIT SUPPORT
1 1/2" = 1'-0"

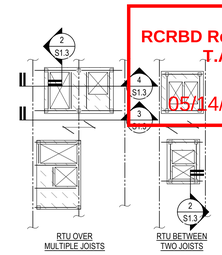


1. COORDINATE OPENING DIMENSIONS WITH MECHANICAL UNIT REQUIREMENTS.
2. ONLY REMOVE DECK REQUIRED FOR DUCT PENETRATIONS.

1 MECHANICAL RTU - ANGLE SUPPORT
3/16" = 1'-0"

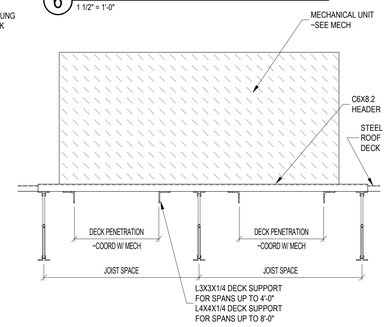


7 CHANNEL SUPPORT HEADER
3/4" = 1'-0"

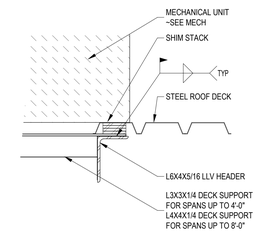


2 STEEL ANGLE MECHANICAL UNIT SUPPORT
1 1/2" = 1'-0"

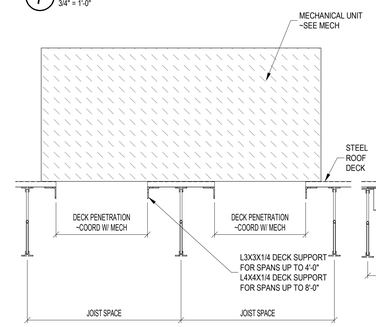


8 CHANNEL HEADER AND DECK SUPPORT
3/4" = 1'-0"

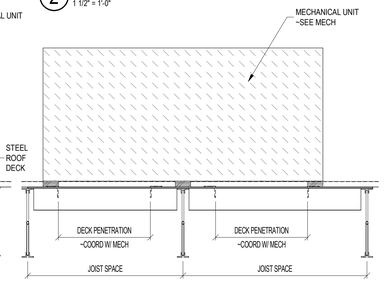


3 ANGLE SUPPORT HEADER
3/4" = 1'-0"

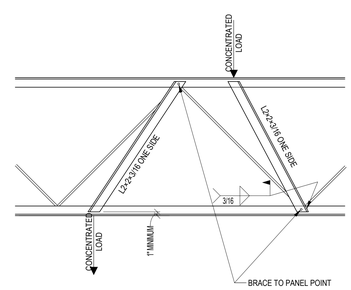


9 JOIST REINFORCING AT CONCENTRATED LOAD
3/4" = 1'-0"

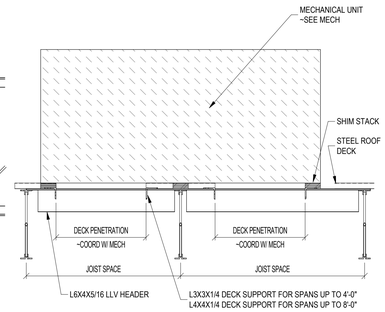


4 ANGLE HEADER AND DECK SUPPORT
3/4" = 1'-0"

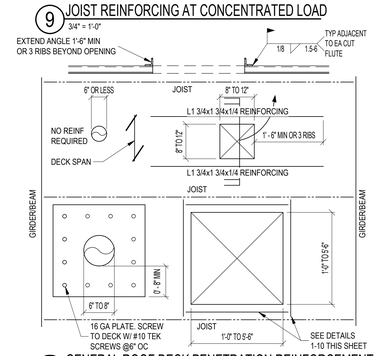


10 GENERAL ROOF DECK PENETRATION REINFORCEMENT
3/4" = 1'-0"

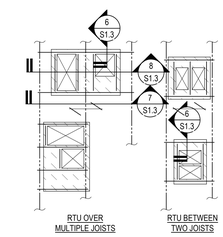


1. COORDINATE OPENING DIMENSIONS WITH MECHANICAL UNIT REQUIREMENTS.
2. ONLY REMOVE DECK REQUIRED FOR DUCT PENETRATIONS.

5 MECHANICAL RTU PLANS - CHANNEL SUPPORT
3/16" = 1'-0"

RCRBD Record Set
T.A.
05/14/2020


TAB Associates
*The Architectural Balance*
0056 Edwards Village Blvd.
Suite 210
Edwards, CO 81632
(970) 766-1470
fax: (970) 766-1471
email: tab@vail.net
www.tabassociates.com

Civil Engineer
Alpine Engineering, Inc.
970-926-3373
Structural Engineer
Jirsa Hedrick Structural Eng.
303-318-6539
Mechanical Engineer
BG BuildingWorks, Inc.
970-949-6109
Electrical Engineer
BG BuildingWorks, Inc.
970-949-6108


Seal
COLORADO LICENSED
MICHAEL OLIVER JIRSA
44113
PROFESSIONAL ENGINEER
6/20

# Strawberry Park Elementary
## 39620 Amethyst Drive
## Steamboat Springs, CO

Revisions:

| No | Description | Date |
|---|---|---|
| | | |

Issue Dates:
DD's - 2/20/20
95% - 03/30/20
CD's - 04/06/20

Sheet Title:
**Steel Bar Joist Roof Typical Details**

Project No:
TAB-1935.02
JH-20191103

Sheet No:
S1.3

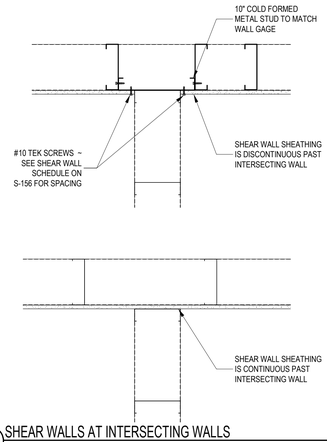


12 SHEAR WALLS AT INTERSECTING WALLS
1 1/2" = 1'-0"

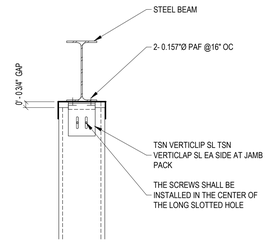


8 TYPICAL DEFLECTION CONNECTION AT STEEL
1 1/2" = 1'-0"

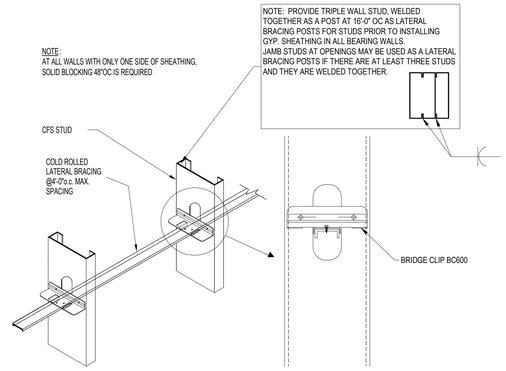


5 CONSTRUCTION BRIDGING
1 1/2" = 1'-0"

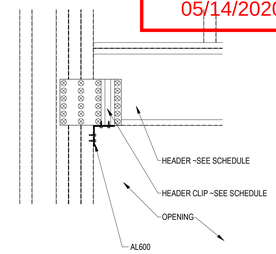


1 TYP DROPPED HEADER CONNECTION
1 1/2" = 1'-0"

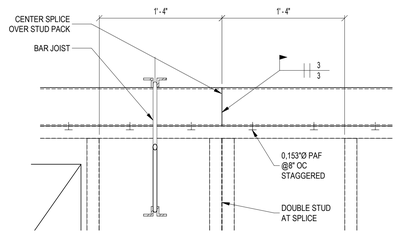


NOTES:
1. DISTRIBUTION HEADER SHALL BE 10'-0" MIN LENGTH UNLESS WALL IS < 10'-0" LONG.
2. DISTRIBUTION HEADER SPLICE SHALL OCCUR ≥ 16" PAST OPENINGS.
3. NO HOLES CAN BE CUT IN DISTRIBUTION HEADER. PLUMBING, ELECTRICAL, ETC. MUST BE RUN IN NON-BEARING WALLS.
4. DOUBLE STUDS ARE REQUIRED AT ALL DISTRIBUTION HEADER SPLICES.

13 DISTRIBUTION HEADER SPLICE
1 1/2" = 1'-0"

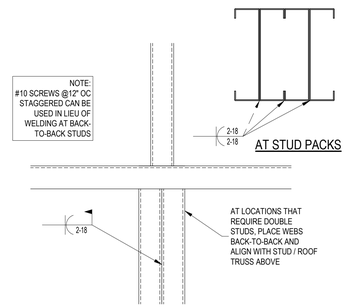


9 MULTIPLE STUDS
3" = 1'-0"

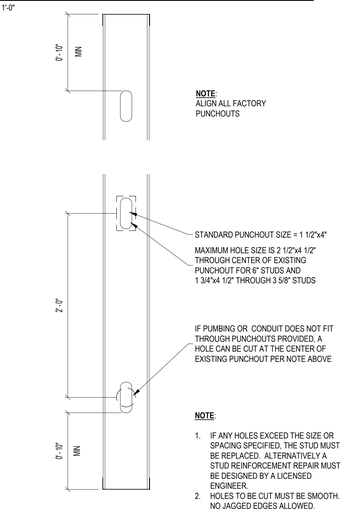


6 ALLOWABLE HOLES FOR CFS STUDS
1 1/2" = 1'-0"

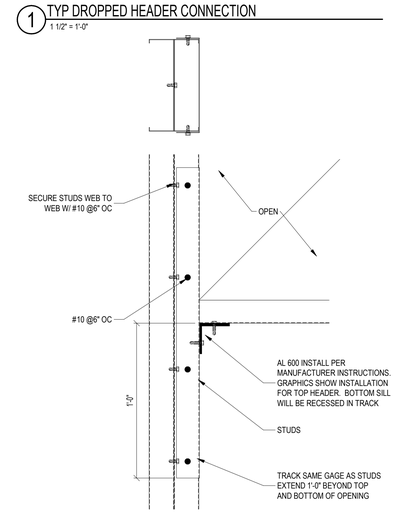


2 WIND HEADER OR SILL CONNECTION
3" = 1'-0"

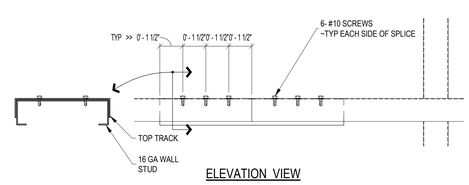


10 TYPICAL TOP TRACK SPLICE
3" = 1'-0"

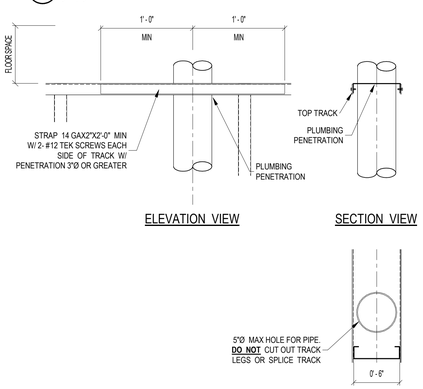


11 VERTICAL PLUMBING PENETRATIONS THRU TRACK
1 1/2" = 1'-0"

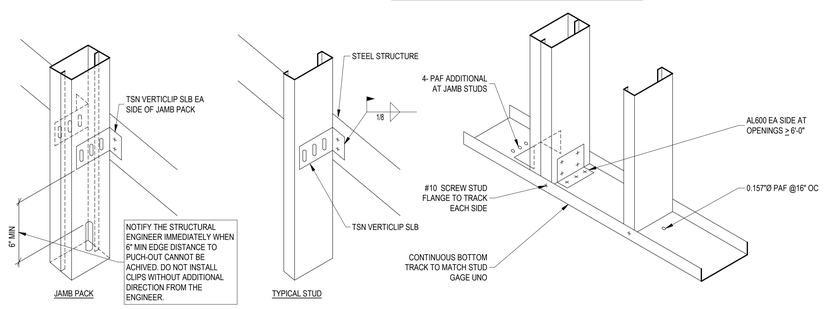


7 TYPICAL DEFLECTION BYPASS CONNECTION
1 1/2" = 1'-0"

3 TYPICAL BOTTOM TRACK TO BEARING STUD
1 1/2" = 1'-0"

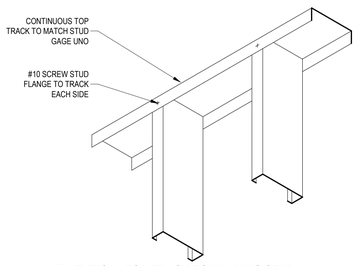


4 TYPICAL TOP TRACK TO BEARING STUD
1 1/2" = 1'-0"

RCRBD Record Set
T.A.
05/14/2020

TAB Associates
The Architectural Balance
0056 Edwards Village Blvd.
Suite 210
Edwards, CO 81632
(970) 766-1470
fax: (970) 766-1471
email: tab@vail.net
www.tabassociates.com
Civil Engineer
Alpine Engineering, Inc.
970-926-3373
Structural Engineer
Jirsa Hedrick Structural Eng.
303-318-6539
Mechanical Engineer
BG BuildingWorks, Inc.
970-949-6109
Electrical Engineer
BG BuildingWorks, Inc.
970-949-6108

Seal
COLORADO LICENSED
MICHAEL OLIVER JIRSA
44113
PROFESSIONAL ENGINEER
6/20

# Strawberry Park Elementary
## 39620 Amethyst Drive
## Steamboat Springs, CO

Revisions:

| No | Description | Date |
|---|---|---|
| | | |

Issue Dates:
DD's - 2/20/20
95% - 03/30/20
CD's - 04/06/20

Sheet Title:
**Typical CFS Details**

Project No:
TAB-1935.02
JH-20191103

Sheet No:
S1.4

# REQUIRED THIRD PARTY SPECIAL INSPECTIONS AND TESTS OF CONCRETE CONSTRUCTION - 2015 IBC

| TYPE | CONTINUOUS SPECIAL INSPECTION | PERIODIC SPECIAL INSPECTION | REFERENCED STANDARD | IBC REFERENCE |
|---|---|---|---|---|
| 1. Inspect reinforcment, including prestressing tendons, and verify placement. | - | X | ACI 318: Ch. 20, 25.2, 25.3, 26.6.1-26.6.3 | 1908.4 |
| 2. Reinforcing bar welding: | - | - | AWS D1.4 ACI 318: 26.6.4 | - |
| a. Verify weldability of reinforcing bars other than ASTM A706. | - | x | AWS D1.4 ACI 318: 26.6.4 | - |
| b. Inspect single-pass fillet welds, maximum 5/16"; and | - | x | AWS D1.4 ACI 318: 26.6.4 | - |
| c. Inspect all other welds. | X | - | AWS D1.4 ACI 318: 26.6.4 | - |
| 3. Inspect anchors cast in concrete. | - | X | ACI 318: 17.8.2 | - |
| 4. Inspect anchors post-installed in hardened concrete members. | - | - | | - |
| a. Adhesive anchors installed in horizontally or upwardly inclined orientatations to resist sustained tension loads. | X | - | ACI 318: 17.8.2.4 | - |
| b. Mechanical anchors and adhesive anchors not defined in 4.a. | - | X | ACI 318: 17.8.2 | - |
| 5. Verifying use of required design mix. | - | X | ACI 318: Ch. 19, 26.4.3, 26.4.4 | 1904.1, 1904.2, 1908.2, 1908.3 |
| 6. Prior to concrete placement, fabricate specimens for strength tests, perform slump and air content tests, and determine the temperature of the concrete. | X | - | ASTM C 172 ASTM C 31 ACI 318: 26.4, 26.12 | 1908.10 |
| 7. Inspect concrete and shotcrete placement for proper application techniques. | X | - | ACI 318: 26.5 | 1908.6, 1908.7, 1908.8 |
| 8. Verify maintenance of specified curing temperature and techniques. | - | X | ACI 318: 26.5.3-26.5.5 | 1908.9 |
| 9. Inspect prestressed concrete for: | - | - | | - |
| a. Application of prestressing forces; and | X | - | ACI 318: 26.10 | - |
| b. Grouting of bonded prestressing tendons. | X | - | ACI 318: 26.10 | - |
| 10. Inspect erection of precast concrete members. | - | X | ACI 318: Ch. 26.8 | - |
| 11. Verify in-situ concrete strength, prior to stressing of tendons in post-tensioned concrete and prior to removal of shores and forms from beams and structural slabs. | - | X | ACI 318: 26.11.2 | - |
| 12. Inspect formwork for shape, location and dimensions of the concrete member being formed. | - | X | ACI 318: 26.11.1.2 (b) | - |

# REQUIRED THIRD PARTY SPECIAL INSPECTIONS OF OPEN-WEB STEEL JOISTS AND JOIST GIRDERS - 2015 IBC

| TYPE | CONTINUOUS SPECIAL INSPECTION | PERIODIC SPECIAL INSPECTION | REFERENCED STANDARD |
|---|---|---|---|
| 1. Installation of open-web steel joists and joist girders. | - | - | |
| a. End connections - welding or bolted. | - | X | SJI specifications listed in Section 2207.1. |
| b. Bridging - horizontal or diagonal. | - | - | |
| 1. Standard bridging. | - | X | SJI specifications listed in Section 2207.1. |
| 2. Bridging that differs from the SJI specifications listed in section 2207.1. | - | X | |

# THIRD PARTY LEVEL B QUALITY ASSURANCE FOR MASONRY CONSTRUCTION - 2015 IBC

| INSPECTION TASK | FREQUENCY | | REFERENCE FOR CRITERIA | |
|---|---|---|---|---|
| | CONTINUOUS | PERIODIC | TMS 402 | TMS 602 |
| 1. Verify compliance with the approved submittals | - | X | - | Art. 1.5 |
| 2. As masonry construction begins, verify that the following are in compliance: | | | | |
| a. Proportions of site-prepared mortar | - | - | X | Art. 2.1, 2.6 A |
| b. Construction of mortar joints | - | X | - | Art. 3.3 B |
| c. Grade and size of prestressing tendons and anchorages. | - | X | - | Art. 2.4 B, 2.4 H |
| d. Location of reinforcement, connectors, and prestressing tendons and anchorages. | - | X | - | Art. 3.4, 3.6 A |
| e. Prestressing technique | - | X | - | Art. 3.6 B |
| f. Properties of thin-bed mortar for AAC masonry | X | X | - | Art. 2.1 C |
| 3. Prior to grouting, verify that the following are in compliance: | | | | |
| a. Grout space | - | X | - | Art. 3.2 D, 3.2F |
| b. Grade, type, and size of reinforcement and anchor bolts, and prestressing tendons and anchorages | - | X | Sec. 6.1 | Art. 2.4, 3.4 |
| c. Placement of reinforcement, connectors, and prestressing tendons and anchorages | - | X | Sec. 6.1, 6.2.1, 6.2.6, 6.2.7 | Art. 3.2 E, 3.4 3.6 A |
| d. Proportions of site-prepared grout and prestressing grout for bonded tendons | - | X | - | Art. 2.6 B, 2.4 G.1.b |
| e. Construction of mortar joints | - | X | - | Art. 3.3 B |
| 4. Verify during construction: | | | | |
| a. Size and location of structural elements | - | X | - | Art. 3.3 F |
| b. Type, size, and location of anchors, including other details of anchorage of masonry to structural members, frames, or other construction. | - | X | Sec. 1.2.1(e), 6.1.4.3, 6.2.1 | - |
| c. Welding of reinforcement | X | - | Sec. 8.1.6.7.2, 9.3.3.4(c), 11.3.3.4 (b) | - |
| d. Preparation, construction, and protection of masonry during cold weather (temperature below 40°F (4.4°C)) or hot weather (temperature above 90°F (32.2°C)) | - | X | - | Art. 1.8 C, 1.8 D |
| e. Application and measurement of prestressing force | X | - | - | Art. 3.6 B |
| f. Placement of grout and prestressing grout for bonded tendons is in compliance | X | - | - | Art. 3.5, 3.6 C |
| g. Placement of AAC masonry units and construction of thin-bed mortar joints | X | X | - | Art. 3.3 B.9, 3.3 F.1.b |
| 5. Observe preparation of grout specimens, mortar specimens, and / or prisms | - | X | - | Art. 1.4 B.2.a.3, 1.4 B.2.b.3, 1.4 B.2.c.3, 1.4 B.3, 1.4 B.4 |

# REQUIRED THIRD PARTY SPECIAL INSPECTIONS AND TESTS OF SOILS - 2015 IBC

| TYPE | CONTINUOUS SPECIAL INSPECTION | PERIODIC SPECIAL INSPECTION |
|---|---|---|
| 1. Verify materials below shallow foundations are adequate to achieve the design bearing capacity. | - | X |
| 2. Verify excavations are extended to proper depth and have reached proper material. | - | X |
| 3. Perform classification and testing of compacted fill materials. | - | X |
| 4. Verify use of proper materials, densities and lift thicknesses during placement and compaction of compacted fill. | X | - |
| 5. Prior to placement of compacted fill, inspect subgrade and verify that site has been prepared properly. | - | X |

# REQUIRED THIRD PARTY VERIFICATION AND INSPECTIONS FOR COLD-FORMED STEEL CONSTRUCTION - 2015 IBC

| VERIFICATION AND INSPECTION | CONTINUOUS | PERIODIC | REFERENCED STANDARD | IBC REFERENCE |
|---|---|---|---|---|
| 1. Pre-fabricated cold-formed steel structural elements and assemblies. | | | | |
| a. size, spacing | - | X | - | Sec. 1704.2.5.1, 1705.11.2., 1705.12.3 |
| b. connections and welds | - | X | | |
| 2. Site built assemblies | | | | |
| a. grade, size, spacing | - | X | | |
| b. connections and welds | - | X | - | Sec. 1705.11.2, 1705.12.3 |
| c. blocking | - | X | | |
| 3. Diaphragms | | | | |
| a. member size at panel edges | - | X | | |
| b. fastener diameter and length | - | X | - | Sec. 1705.11.2, 1705.12.3 |
| c. fastener spacing | - | X | | |

# STATEMENT OF SPECIAL INSPECTIONS - 2015 IBC

1. SPECIAL INSPECTIONS AND STRUCTURAL TESTING SHALL BE PROVIDED BY A THIRD PARTY AGENCY EMPLOYED BY THE OWNER. SPECIAL INSPECTIONS AND TESTING SHALL BE PROVIDED AS REQUIRED IN CHAPTER 17 OF THE IBC AND BY THE ENGINEER OF RECORD. REQUIREMENTS ARE NOTED IN CHARTS PROVIDED ON THE CONSTRUCTION DOCUMENTS, AS WELL AS IN THE SPECIFICATIONS.
2. THE NAMES AND CREDENTIALS OF THE SPECIAL INSPECTORS TO BE USED SHALL BE SUBMITTED TO THE BUILDING OFFICIAL.
   - A. ALL SPECIAL INSPECTORS SHALL BE QUALIFIED TO INSPECT MATERIALS BASED ON CERTIFICATION, TRANING OR EXPERIENCE AS REQUIRED, AND MUST MEET SPECIFICATION STANDARDS.
3. SPECIAL INSPECTOR DUTIES:
   - A. SPECIAL INSPECTOR SHALL REVIEW ALL WORK REQUIRED ON THE CONSTRUCTION DOCUMENTS AND SPECIFICATIONS.
   - B. SPECIAL INSPECTOR SHALL FURNISH SPECIAL INSPECTION REPORTS TO THE ENGINEER OF RECORD, ARCHITECT, CONTRACTOR, OWNER, AND BUILDING OFFICIAL ON A WEEKLY BASIS OR MORE FREQUENTLY. ALL ITEMS NOT IN COMPLIANCE SHALL BE BROUGHT TO THE IMMEDIATE ATTENTION OF THE CONTRACTOR FOR CORRECTION. IF UNCORRECTED, THEY SHALL BE REPORTED TO THE EOR.
   - C. SPECIAL INSPECTOR SHALL KEEP A LOG OF ALL NON-COMPLIANCE ITEMS, INCLUDING THOSE NOTED ON STRUCTURAL OBSERVATION REPORTS.
   - D. SPECIAL INSPECTOR SHALL REINSPECT ALL NON-COMPLIANCE ITEMS UPON REPAIR BY THE CONTRACTOR TO MEET THE CONSTRUCTION DOCUMENTS OR REPAIR BASED ON ENGINEER OF RECORD DIRECTIVES.
   - E. SPECIAL INSPECTOR SHALL SUBMIT A FINAL REPORT.
   - F. SPECIAL INSPECTOR SHALL FURNISH A FINAL LETTER TO THE EOR AT THE COMPLETION OF THE PROJECT STATING THAT ALL INSPECTIONS HAVE BEEN COMPLETED AND ALL DISCREPANCIES HAVE BEEN RESOLVED.
4. CONTRACTOR DUTIES:
   - A. CONTRACTOR SHALL SUBMIT A WRITTEN STATEMENT OF RESPONSIBILITY TO THE OWNER AND BUILDING OFFICIAL PRIOR TO THE COMMENCEMENT OF WORK. THE STATEMENT SHALL CONTAIN ACKNOWLEDGEMENT OF THE SPECIAL INSPECTION REQUIREMENTS ON THE CONSTRUCTION DOCUMENTS AND SPECIFICATIONS.
   - B. CONTRACTOR SHALL NOTIFY THE RESPONSIBLE SPECIAL INSPECTOR THAT WORK IS READY FOR INSPECTION A MINIMUM OF 24 HOURS BEFORE SUCH INSPECTION IS REQUIRED.
   - C. ALL WORK, INCLUDING REPAIRS, SHALL REMAIN ACCESSIBLE AND EXPOSED UNTIL IT HAS BEEN OBSERVED BY THE SPECIAL INSPECTOR.
   - D. CONTRACTOR SHALL PROVIDE CURRENT DRAWINGS AND SPECIFICATIONS TO THE SPECIAL INSPECTOR. THIS INCLUDES ALL STRUCTURAL OBSERVATIONS, REPORTS, AND REPAIR DOCUMENTATION.
   - E. ALL REPAIRS SHALL BE INSPECTED AT THE COST OF THE CONTRACTOR. NON-COMPLIANCE ITEMS SHALL BE RESOLVED IN A TIMELY MANNER.

# REQUIRED THIRD PARTY VERIFICATION AND INSPECTION FOR STEEL CONSTRUCTION - 2015 IBC

RCRBD Record Set
T.A.
05/14/2020

| | CONTINUOUS | PERIODIC | REFERENCED STANDARD |
|---|---|---|---|
| **INSPECTION TASKS PRIOR TO WELDING** | | | |
| Welder qualification records and continuity records | - | X | |
| WPS available | X | | |
| Manufacturer certifications for welding consumables available | X | - | |
| Material identification (type/grade) | - | X | |
| Welder identification system [1] | - | X | |
| Fit-up of groove welds (including joint geometry) | - | X | AISC 360 TABLE N5.4-1 |
| Fit-up of CJP groove welds of HSS T-, Y- and K-joints without backing (including joint geometry) | - | X | AISC 360 TABLE N5.4-1 |
| Configuration and finish of access holes | - | X | |
| Fit-up of fillet welds | - | X | AISC 360 TABLE N5.4-1 |
| **INSPECTION TASKS DURING WELDING** | | | |
| Control and handling of welding consumables | - | X | AISC 360 TABLE N5.4-2 |
| No welding over cracked tack welds | - | X | |
| Environmental conditions | - | X | AISC 360 TABLE N5.4-2 |
| WPS followed | - | X | AISC 360 TABLE N5.4-2 |
| Welding techniques | - | X | AISC 360 TABLE N5.4-2 |
| Placement and installation of steel headed stud anchors | X | - | |
| **INSPECTION TASKS AFTER WELDING** | | | |
| Welds cleaned | - | X | |
| Size, length and location of welds | X | - | |
| Welds meet visual acceptance criteria | X | - | AISC 360 TABLE N5.4-3 |
| Arc strikes | X | - | |
| k-area [2] | X | - | |
| Weld access holes in rolled heavy shapes and built-up heavy shapes [3] | X | - | |
| Backing removed and weld tabs removed (if required) | X | - | |
| Repair activities | X | - | |
| Document acceptance or rejection of welded joint or member | X | - | |
| No prohibited welds have been added without the approval of the EOR | - | X | |
| **INSPECTION TASKS PRIOR TO BOLTING** | | | |
| Manufacturer's certifications available for fastener materials | X | - | |
| Fasteners marked in accordance with ASTM requirements | - | X | |
| Correct fasteners selected for the joint detail (grade, type, bolt length if threads are to be excluded from shear plane) | - | X | |
| Correct bolting procedure selected for joint detail | - | X | |
| Connecting elements, including the appropriate faying surface condition and hole preparation, if specified, meet applicable requirements | - | X | |
| Pre-installation verification testing by installation personnel observed and documented for fastener assemblies and methods used | - | X | |
| Protected storage provided for bolts, nuts, washers and other fastener components | - | X | |
| **INSPECTION TASKS DURING BOLTING** | | | |
| Fastener assemblies placed in all holes and washers and nuts are positioned as required | - | X | |
| Joint brought to the snug-tight condition prior to the pretensioning operation | - | X | |
| Fastener component not turned by the wrench prevented from rotating | - | X | |
| Fasteners are pretensioned in accordance with the RCSC Specification, progressing systematically from the most rigid point toward the free edges | - | X | |
| **INSPECTION TASKS AFTER BOLTING** | | | |
| Document acceptance or rejection of bolted connections | X | - | |
| **INSPECTION OF STEEL FRAME, DECK AND JOINT DETAILS FOR COMPLIANCE** | | | |
| Placement and installation of steel deck | - | X | |
| Details such as bracing and stiffening | - | X | |
| Member locations | - | X | |
| Application of joint details at each connection | - | X | |

NOTES:
1. THE FABRICATOR OR ERECTOR, AS APPLICABLE, SHALL MAINTAIN A SYSTEM BY WHICH A WELDER WHO HAS WELDED A JOINT OR MEMBER CAN BE IDENTIFIED. STAMPS, IF USED, SHALL BE THE LOW-STRESS TYPE.
2. WHEN WELDING OF DOUBLER PLATES, CONTINUITY PLATES OR STIFFENERS HAS BEEN PERFORMED IN THE k-AREA, VISUALLY INSPECT THE WEB k-AREA FOR CRACKS WITHIN 3" OF THE WELD.
3. AFTER ROLLED HEAVY SHAPES (PER AISC 360 SECTION A3.1c) AND BUILT-UP HEAVY SHAPES (PER AISC 360 SECTION A3.1d) ARE WELDED, VISUALLY INSPECT THE WELD ACCESS HOLES FOR CRACKS.


TAB Associates
*The Architectural Balance*
0056 Edwards Village Blvd.
Suite 210
Edwards, CO 8132
(970) 766-1470
fax: (970) 766-1471
email: tab@vail.net
www.tabassociates.com

Civil Engineer
Alpine Engineering, Inc.
970-926-3373

Structural Engineer
Jirsa Hedrick Structural Eng.
303-318-6539

Mechanical Engineer
BG BuildingWorks, Inc.
970-949-6109

Electrical Engineer
BG BuildingWorks, Inc.
970-949-6108


Seal
COLORADO LICENSED
MATTHEW OLIVER HOOD
44113
PROFESSIONAL ENGINEER
4/6/20

**Strawberry Park Elementary**
**39620 Amethyst Drive**
**Steamboat Springs, CO**

| Revisions: | | |
|---|---|---|
| No | Description | Date |
| | | |

Issue Dates:
DD's - 2/20/20
95% - 03/30/20
CD's - 04/06/20

Sheet Title:
**Inspection Schedules 2015 IBC**

Project No:
TAB-1935.02
JH-20191103

Sheet No:
S1.5

## LOADING DIAGRAM KEY

| PATTERN | AREA | TOTAL DEAD LOAD | LIVE LOAD | NOTES |
|---|---|---|---|---|
| | ROOF | 25 psf | 72 psf SNOW + DRIFT (non-reducible) | |
| | ROOF MECHANICAL | 25 psf + UNIT WEIGHT | 72 psf SNOW + DRIFT (non-reducible) | |

NOTES:
1. ROOF JOIST DEAD LOAD INCLUDES THE WEIGHT OF THE JOISTS.
2. SNOW DRIFT DIAGRAMS INCLUDE THE 72 psf BASE SNOW LOAD.
3. DESIGN ROOF JOISTS FOR 10 psf NET UPLIFT.
4. ROOF JOIST BRIDGING SHALL BE PROVIDED IN ACCORDANCE WITH SJI SPECIFICATIONS.

RCRBD Record Set
T.A.
05/14/2020

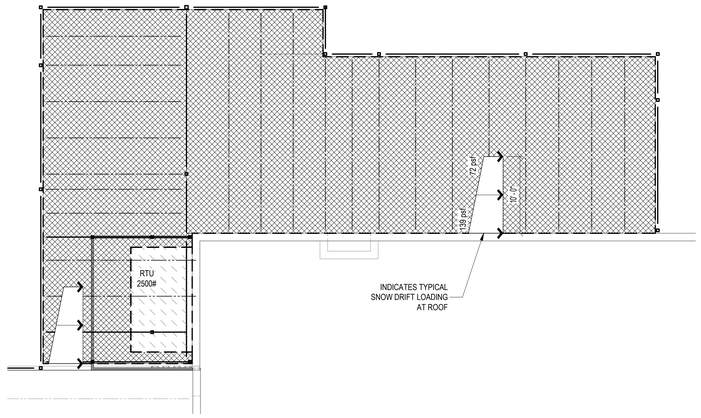


1 ROOF LOADING PLAN
1/8" = 1'-0"


TAB Associates
*The Architectural Balance*
0056 Edwards Village Blvd.
Suite 210
Edwards, CO 81632
(970) 766-1470
fax: (970) 766-1471
email: tab@vail.net
www.tabassociates.com

Civil Engineer
Alpine Engineering, Inc.
970-926-3373
Structural Engineer
Jirsa Hedrick Structural Eng.
303-318-6539
Mechanical Engineer
BG BuildingWorks, Inc.
970-949-6109
Electrical Engineer
BG BuildingWorks, Inc.
970-949-6108


Seal
COLORADO LICENSED
MICHAEL OLIVER JIRSA
44113
PROFESSIONAL ENGINEER
4/6/20

# Strawberry Park Elementary
## 39620 Amethyst Drive
Steamboat Springs, CO

Revisions:

| No | Description | Date |
|---|---|---|
| | | |

Issue Dates:
DD's - 2/20/20
95% - 03/30/20
CD's - 04/06/20

Sheet Title:
**Loading Plan**

Project No:
TAB-1935.02
JH-20191103

Sheet No:
S1.6

RCRBD Record Set
T.A.

05/14/2020

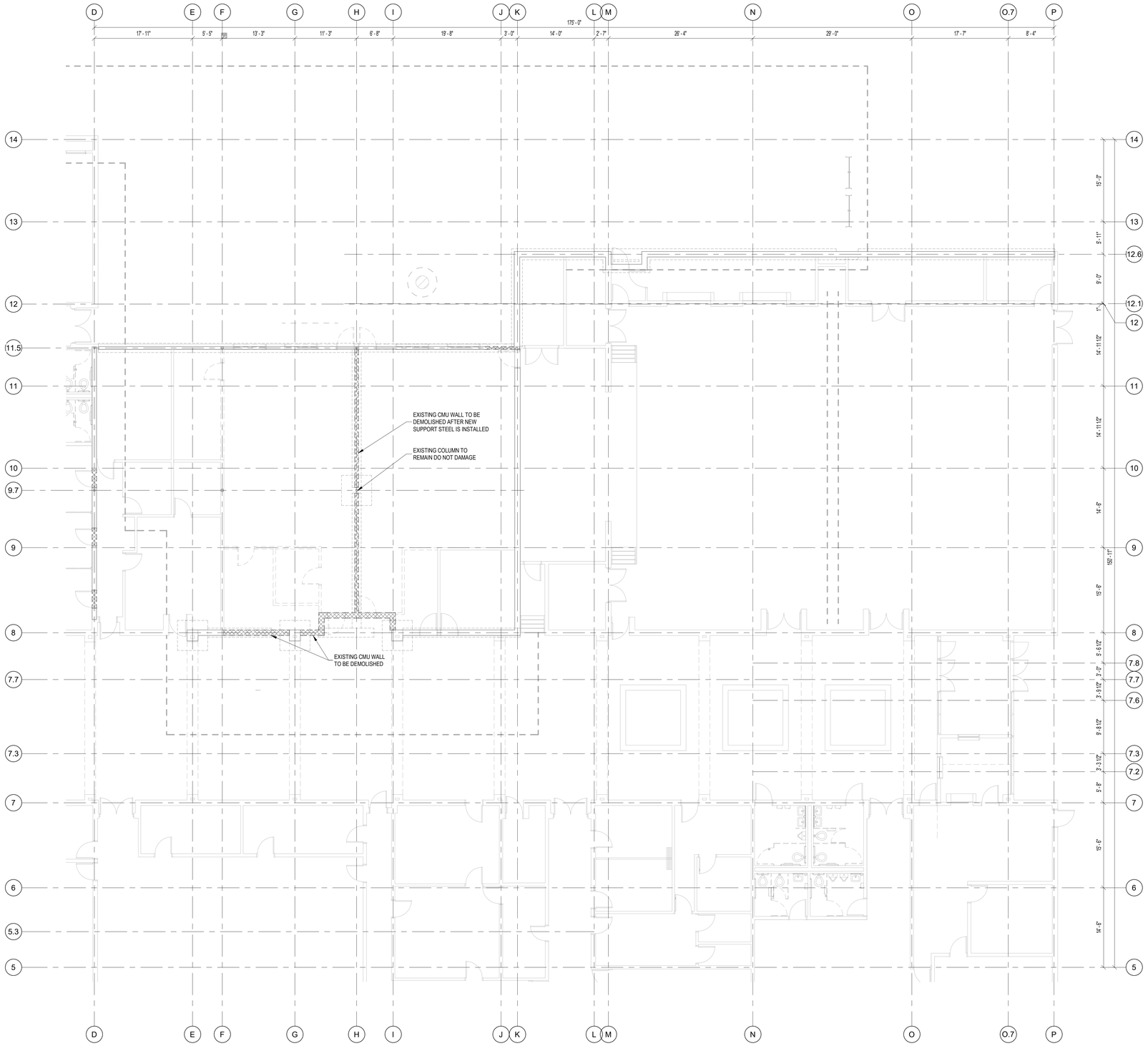


1 MAIN LEVEL DEMO PLAN
1/8" = 1'-0"

TRUE N
BUILDING NORTH


TAB Associates
*The Architectural Balance*
0056 Edwards Village Blvd.
Suite 210
Edwards, CO 8132
(970) 766-1470
fax: (970) 766-1471
email: tab@vail.net
www.tabassociates.com

Civil Engineer
Alpine Engineering, Inc.
970-926-3373
Structural Engineer
Jirsa Hedrick Structural Eng.
303-318-6539
Mechanical Engineer
BG BuildingWorks, Inc.
970-949-6109
Electrical Engineer
BG BuildingWorks, Inc.
970-949-6108


Seal
COLORADO LICENSED
MICHAEL OLIVER JIRSA
44113
PROFESSIONAL ENGINEER
5/5/20

# Strawberry Park Elementary
# 39620 Amethyst Drive
## Steamboat Springs, CO

Revisions:

| No | Description | Date |
|---|---|---|
| | | |

Issue Dates:
DD's - 2/20/20
95% - 03/30/20
CD's - 04/06/20

Sheet Title:
**Demo Main Level Plan**

Project No:
TAB-1935.02
JH-20191103

Sheet No:
S2.01

RCRBD Record Set
T.A.

05/14/2020

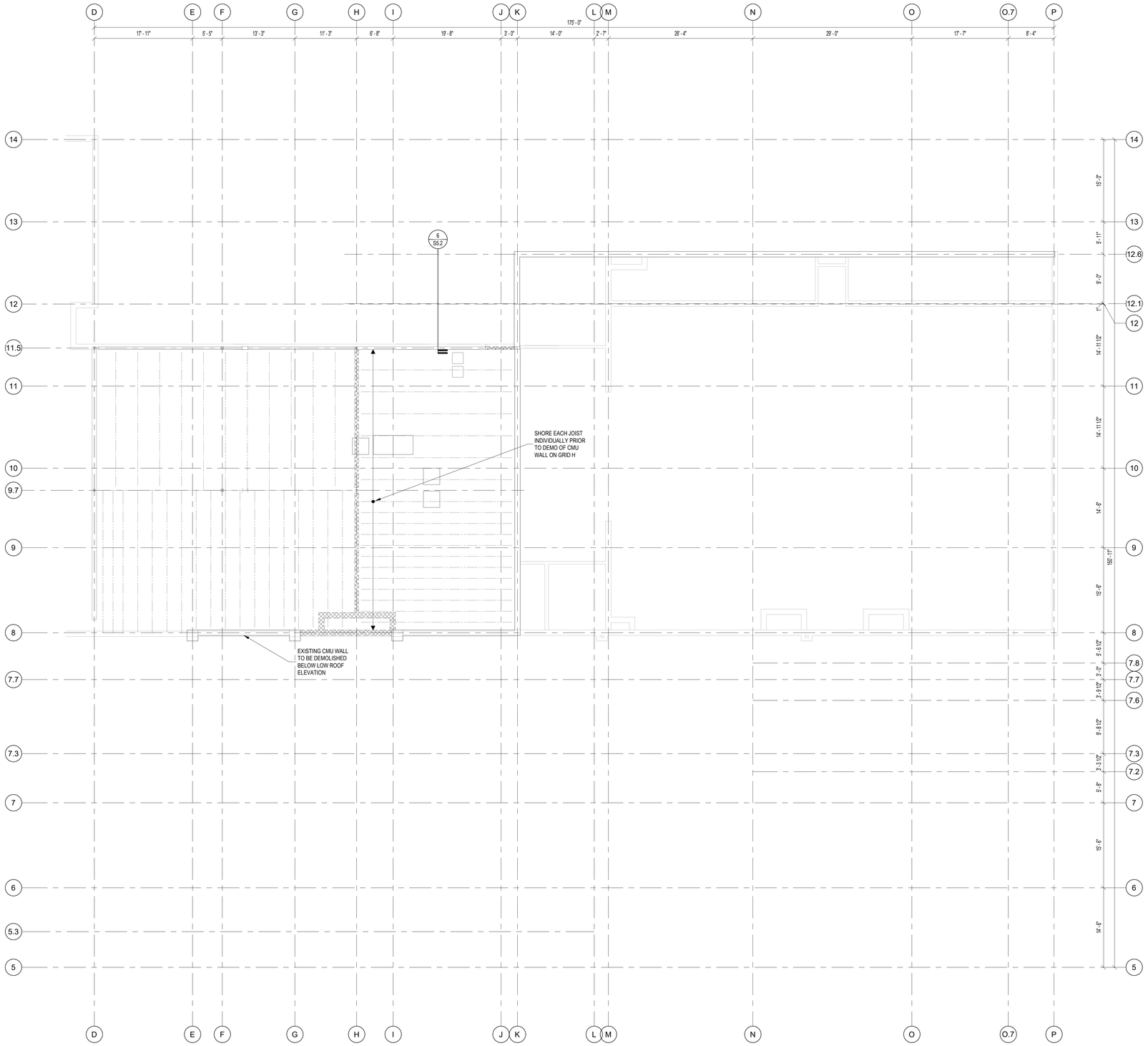


1 ROOF DEMO PLAN
1/8" = 1'-0"

TRUE N

BUILDING NORTH


TAB Associates
*The Architectural Balance*
0056 Edwards Village Blvd.
Suite 210
Edwards, CO 81632
(970) 766-1470
fax: (970) 766-1471
email: tab@vail.net
www.tabassociates.com

Civil Engineer
Alpine Engineering, Inc.
970-926-3373
Structural Engineer
Jirsa Hedrick Structural Eng.
303-318-6539
Mechanical Engineer
BG BuildingWorks, Inc.
970-949-6109
Electrical Engineer
BG BuildingWorks, Inc.
970-949-6108


Seal

COLORADO LICENSED
MEMBER OLIVER TAB JR.
44113
PROFESSIONAL ENGINEER
5/5/20

# Strawberry Park Elementary
## 39620 Amethyst Drive
### Steamboat Springs, CO

Revisions:

| No | Description | Date |
|---|---|---|
| | | |

Issue Dates:
DD's - 2/20/20
95% - 03/30/20
CD's - 04/06/20

Sheet Title:
**Demo Roof Plan**

Project No:
TAB-1935.02
JH-20191103

Sheet No:
S2.02

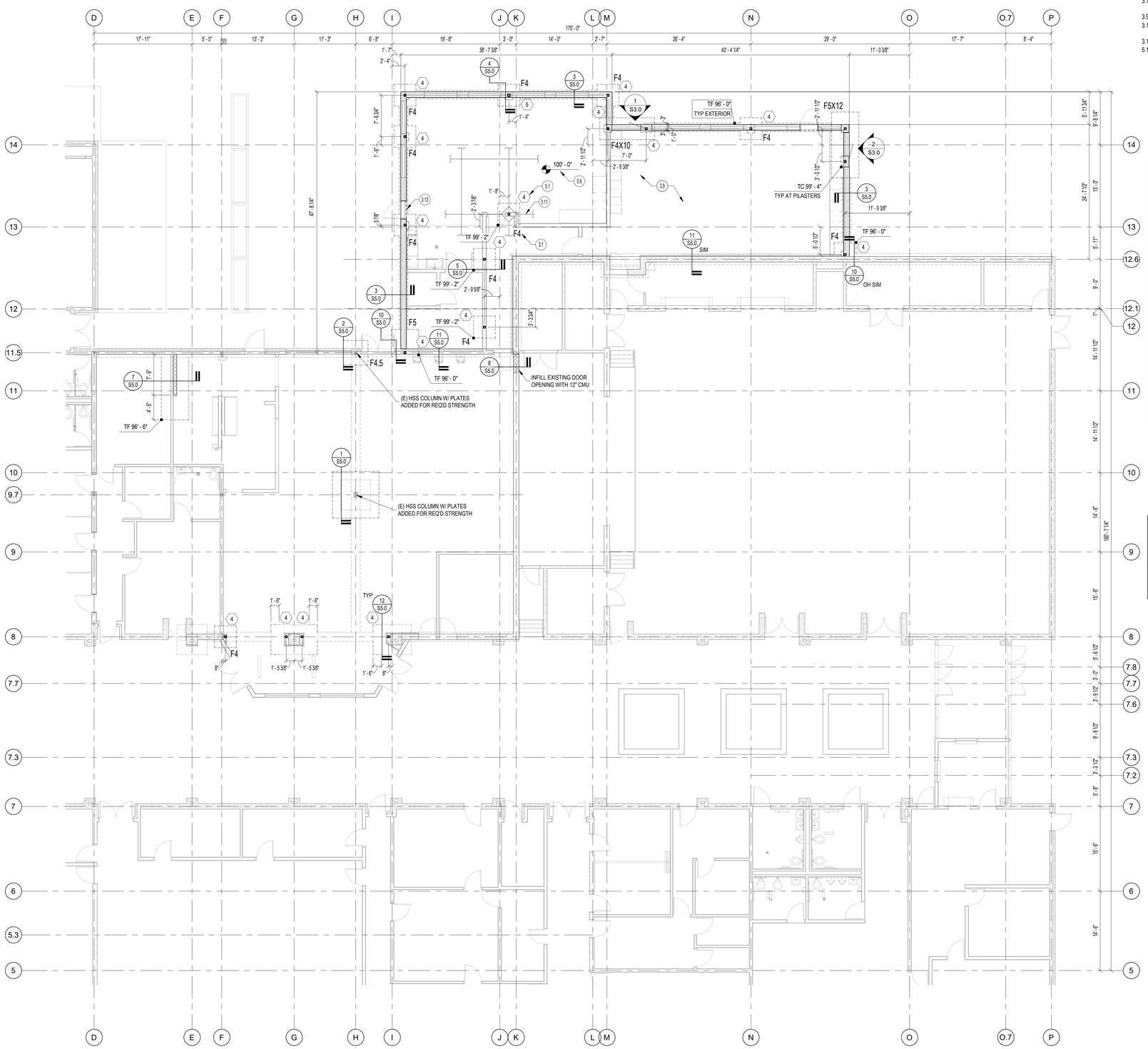


1 FOUNDATION PLAN
1/8" = 1'-0"

## KEYNOTES

| | |
|---|---|
| 0.6 | TOP OF SLAB UNLESS NOTED OTHERWISE. |
| 3.1 | INDICATES CONCRETE PAD FOOTING. SEE SCHEDULE FOR FOOTING TYPE AND REINFORCING. |
| 3.9 | 4" CONCRETE SLAB-ON-GRADE REINFORCED WITH WIRE MESH AND FIBER. |
| 3.11 | CONTROL JOINTS AT ALL COLUMN LINES AND BALANCE OF SLAB NOT TO EXCEED 10'-0" OC EACH WAY. |
| 3.13 | PLACE SLAB OVER GRADE BEAM AT THRESHOLD. SEE DETAILS. |
| 5.1 | INDICATES STEEL COLUMN TYPE. SEE SCHEDULE. |

RCRBD Record Set
T.A.
05/14/2020

## STEEL COLUMN SCHEDULE

| MARK | SIZE | BASEPLATE TYPE |
|---|---|---|
| 4 | HSS4X4X5/16 | 1 |
| 5 | HSS5X5X5/16 | 1 |
| 6 | HSS6X6X1/4 | 1 |

NOTES:
1. PROVIDE 1 1/2" NON-SHRINK GROUT UNDER ALL BASE PLATES BEARING ON CONCRETE

## BASE PLATE SCHEDULE

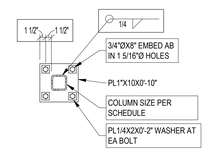


TYPE 1

## SPREAD FOOTING SCHEDULE

| TYPE | WIDTH | LENGTH | THICKNESS | REINFORCING |
|---|---|---|---|---|
| F4 | 4' - 0" | 4' - 0" | 1' - 0" | #5 @ 12" EW BOTTOM |
| F4.5 | 4' - 6" | 4' - 6" | 1' - 0" | #5 @ 12" EW BOTTOM |
| F4X10 | 4' - 0" | 10' - 0" | 2' - 0" | #7 @ 12" EW T&B |
| F5 | 5' - 0" | 5' - 0" | 1' - 0" | #5 @ 12" EW T&B |
| F5X12 | 5' - 0" | 12' - 0" | 2' - 0" | #7 @ 12" EW T&B |
| F6 | 6' - 0" | 6' - 0" | 1' - 4" | #5 @ 12" EW BOTTOM |


TAB Associates
The Architectural Balance
0056 Edwards Village Blvd.
Suite 210
Edwards, CO 81132
(970) 766-1470
fax: (970) 766-1471
email: tab@vail.net
www.tabassociates.com

Civil Engineer
Alpine Engineering, Inc.
970-926-3373
Structural Engineer
Jirsa Hedrick Structural Eng.
303-318-6539
Mechanical Engineer
BG BuildingWorks, Inc.
970-949-6109
Electrical Engineer
BG BuildingWorks, Inc.
970-949-6108


Seal

# Strawberry Park Elementary
# 39620 Amethyst Drive
## Steamboat Springs, CO

Revisions:

| No | Description | Date |
|---|---|---|

Issue Dates:
DD's - 2/20/20
95% - 03/30/20
CD's - 04/06/20

Sheet Title:
**Main Level Plan**

Project No:
TAB-1935.02
JH-20191103

Sheet No:
S2.11

## KEYNOTES

| | |
|---|---|
| 5.2 | INDICATES STEEL BEAM SIZE AND TOP OF STEEL ELEVATION. |
| 5.3 | <##k> INDICATES LRFD BEAM END REACTION. IF NO DESIGNATION, USE 12K MINIMUM. *XXK INDICATES BEAM FRAMES OVER TOP OF COLUMN. |
| 5.8 | ALL BEAMS WITH COLUMNS ABOVE SHALL BE CENTERED ON COLUMN AND TO STIFFENER PLATES EACH SIDE OF BEAM. |
| 5.9 | INDICATES BRACE FRAMING. |
| 5.11 | JOIST DESIGN FOR 20psf DEAD LOAD AND 72psf UNIFORM SNOW LOAD PLUS WEIGHT OF MECHANICAL UNITS WHERE APPLICABLE. SPACING AS SHOWN ON PLAN. SEE LOADING PLAN FOR ADDITIONAL SNOW LOADS DUE TO DRIFTING. DESIGN ROOF JOIST FOR A NET UPLIFT OF 15psf. |
| 5.16 | 1 1/2" TYPE "B"x18GA METAL ROOF DECK, 3 SPAN MINIMUM. ATTACH DECK WITH HILTI X-ENP19 FASTENERS IN A 36/4 PATTERN AND #10 SCREW SIDELAP CONNECTION @12" OC TO DEVELOP A DIAPHRAGM SHEAR CAPACITY OF 550 plf. |
| 5.18 | INDICATES DRAG CONNECTION. SEE BRACED FRAME DETAILS. |
| 5.19 | INDICATES COLD-FORMED STUD WALL AT MECHANICAL PENTHOUSE BY SUPPLIER. SEE DETAILS. |

RCPBD Record Set
T.A.
06/14/2020

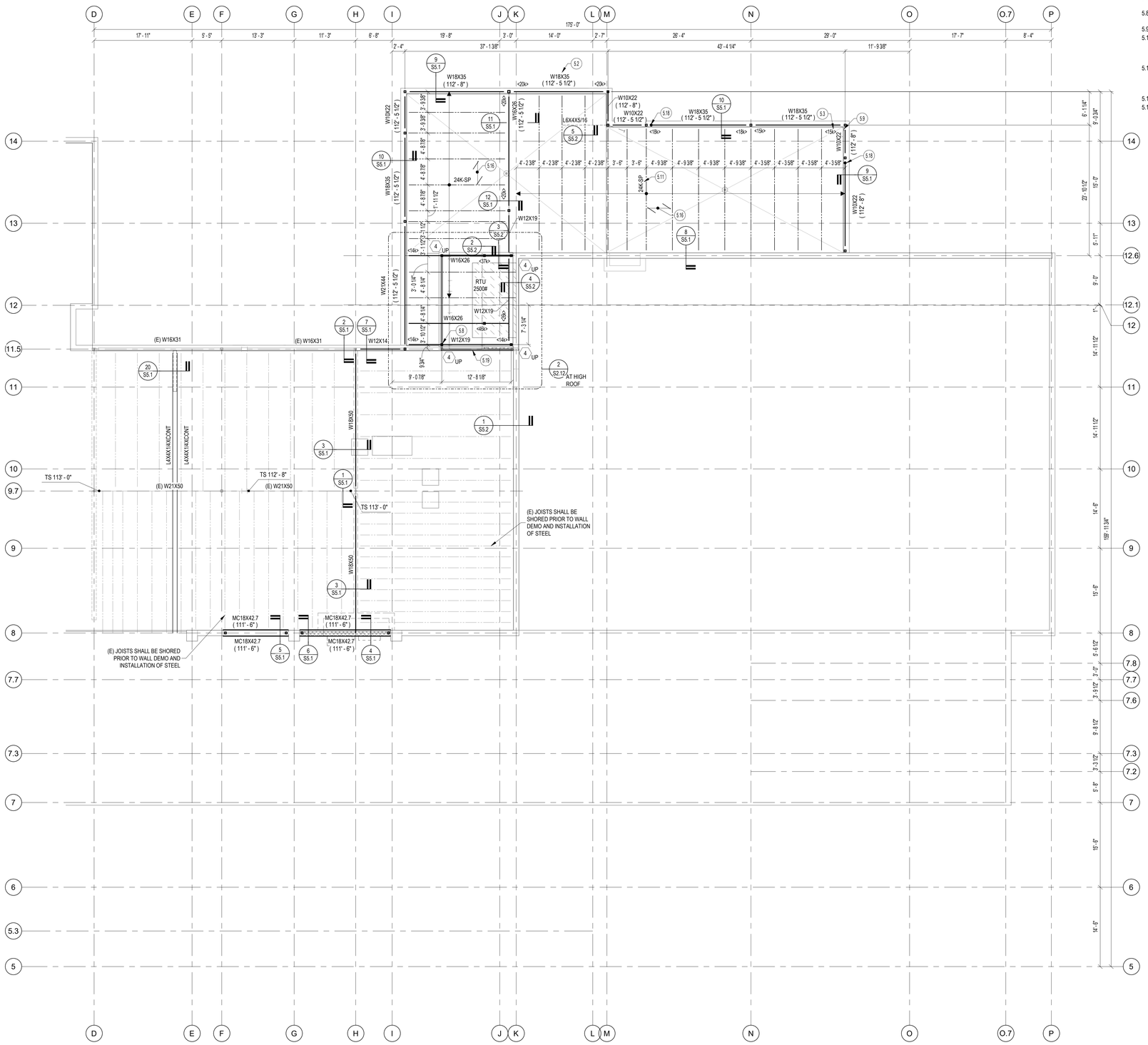


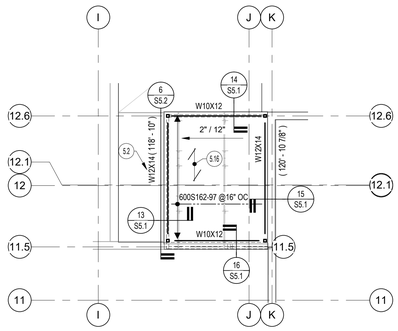


2 PENTHOUSE FRAMING PLAN
1/8" = 1'-0"

1 ROOF FRAMING PLAN
1/8" = 1'-0"

TRUE N — BUILDING NORTH


TAB Associates
*The Architectural Balance*
0056 Edwards Village Blvd.
Suite 210
Edwards, CO 81632
(970) 766-1470
fax: (970) 766-1471
email: tab@vail.net
www.tabassociates.com

Civil Engineer
Alpine Engineering, Inc.
970-926-3373
Structural Engineer
Jirsa Hedrick Structural Eng.
303-318-6539
Mechanical Engineer
BG BuildingWorks, Inc.
970-949-6109
Electrical Engineer
BG BuildingWorks, Inc.
970-949-6108


Seal
COLORADO LICENSED
MICHAEL OLIVER HEDRICK
44113
PROFESSIONAL ENGINEER
6/20

# Strawberry Park Elementary
## 39620 Amethyst Drive
Steamboat Springs, CO

Revisions:

| No | Description | Date |
|---|---|---|
| | | |

Issue Dates:
DD's - 2/20/20
95% - 03/30/20
CD's - 04/06/20

Sheet Title:
**Roof Plan**

Project No:
TAB-1935.02
JH-20191103

Sheet No:
S2.12

## KEYNOTES

| | |
|---|---|
| 3.1 | INDICATES CONCRETE PAD FOOTING. SEE SCHEDULE FOR FOOTING TYPE AND REINFORCING. |
| 5.1 | INDICATES STEEL COLUMN TYPE. SEE SCHEDULE. |
| 5.2 | INDICATES STEEL BEAM SIZE AND [illegible] |

RCRBD Record Set
T.A.
05/14/2020

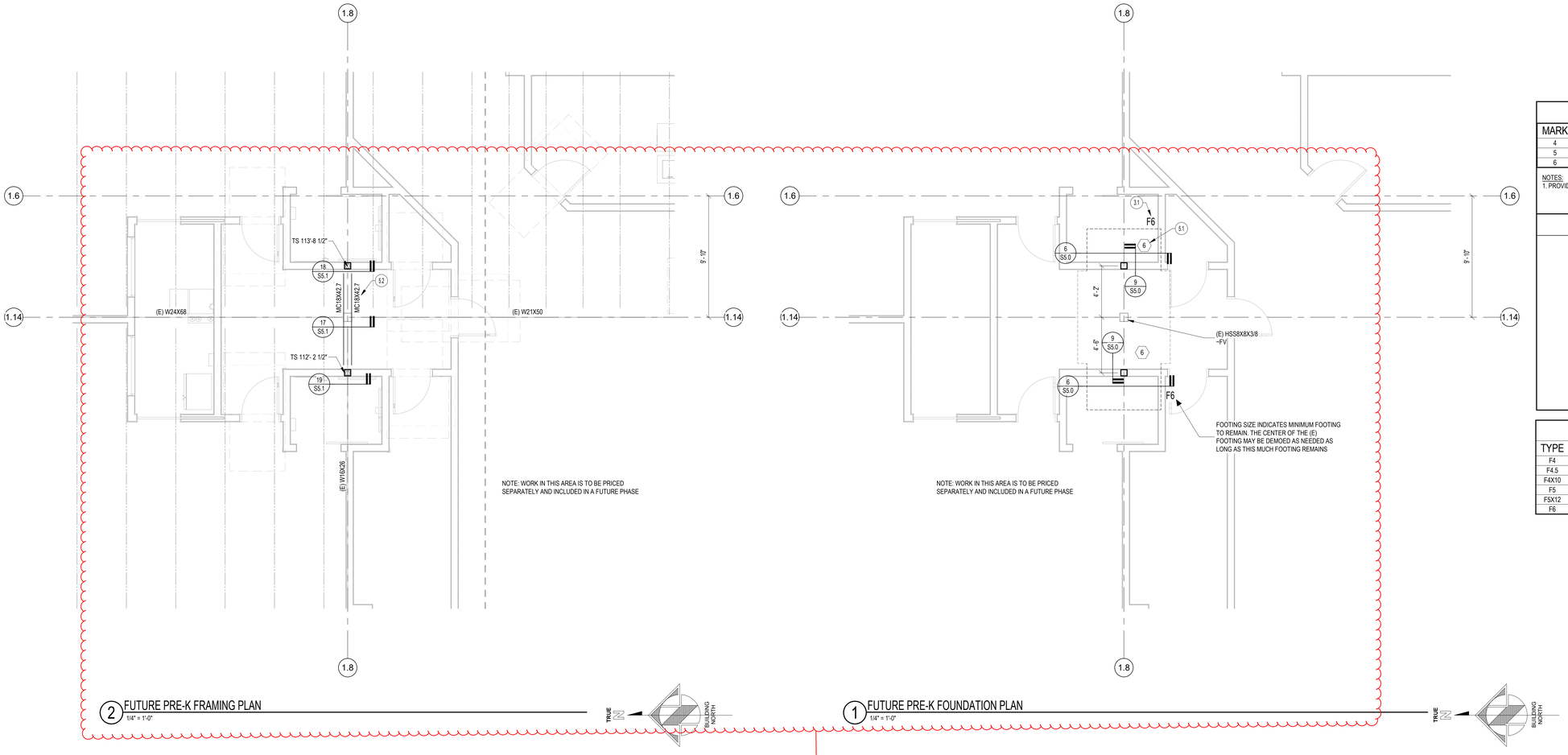


In order to eliminate confusion, please remove future work for future phase from this construction set.

## STEEL COLUMN SCHEDULE

| MARK | SIZE | BASEPLATE TYPE |
|---|---|---|
| 4 | HSS4X4X5/16 | 1 |
| 5 | HSS5X5X5/16 | 1 |
| 6 | HSS6X6X1/4 | 1 |

NOTES:
1. PROVIDE 1 1/2" NON-SHRINK GROUT UNDER ALL BASE PLATES BEARING ON CONCRETE

## BASE PLATE SCHEDULE

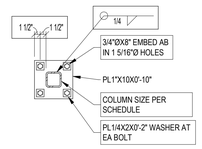


TYPE 1

## SPREAD FOOTING SCHEDULE

| TYPE | WIDTH | LENGTH | THICKNESS | REINFORCING |
|---|---|---|---|---|
| F4 | 4' - 0" | 4' - 0" | 1' - 0" | #5 @ 12" EW BOTTOM |
| F4.5 | 4' - 6" | 4' - 6" | 1' - 0" | #5 @ 12" EW BOTTOM |
| F4X10 | 4' - 0" | 10' - 0" | 2' - 0" | #7 @ 12" EW T&B |
| F5 | 5' - 0" | 5' - 0" | 1' - 0" | #5 @ 12" EW T&B |
| F5X12 | 5' - 0" | 12' - 0" | 2' - 0" | #7 @ 12" EW T&B |
| F6 | 6' - 0" | 6' - 0" | 1' - 4" | #5 @ 12" EW BOTTOM |


TAB Associates
The Architectural Balance
0056 Edwards Village Blvd.
Suite 210
Edwards, CO 8132
(970) 766-1470
fax: (970) 766-1471
email: tab@vail.net
www.tabassociates.com

Civil Engineer
Alpine Engineering, Inc.
970-926-3373
Structural Engineer
Jirsa Hedrick Structural Eng.
303-318-6539
Mechanical Engineer
BG BuildingWorks, Inc.
970-949-6109
Electrical Engineer
BG BuildingWorks, Inc.
970-949-6108


Seal
COLORADO LICENSED
MATTHEW OLIVER RIDGE
44113
PROFESSIONAL ENGINEER
4/6/20

# Strawberry Park Elementary
# 39620 Amethyst Drive
## Steamboat Springs, CO

Revisions:

| No | Description | Date |
|---|---|---|
| | | |

Issue Dates:
DD's - 2/20/20
95% - 03/30/20
CD's - 04/06/20

Sheet Title:
**Pre-K Area B Plans**

Project No:
TAB-1935.02
JH-20191103

Sheet No:
S2.21

BOXED NOTES INDICATE A TYPICAL CONDITION EXISTS THRUGHOUT UNLESS OTHERWISE NOTED

RCRBD Record Set
T.A.
05/14/2020

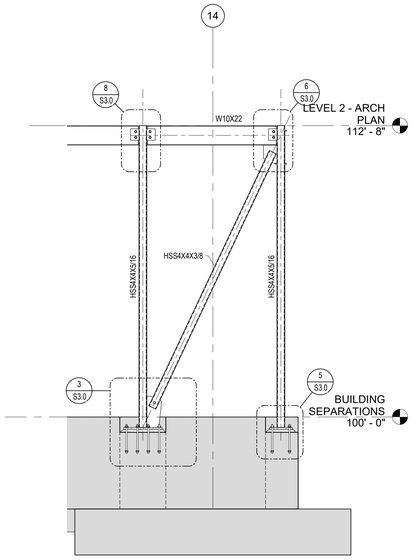


2 SOUTH FRAME
3/8" = 1'-0"

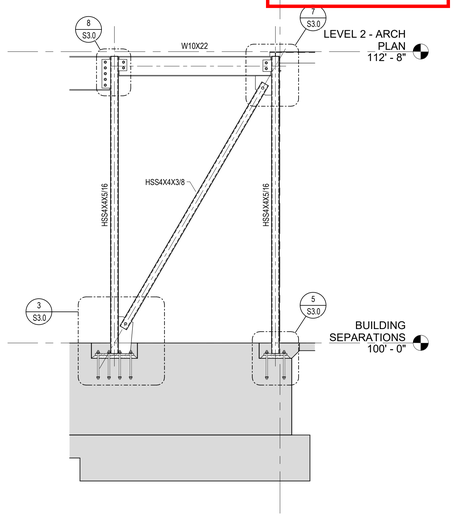


1 EAST FRAME
3/8" = 1'-0"

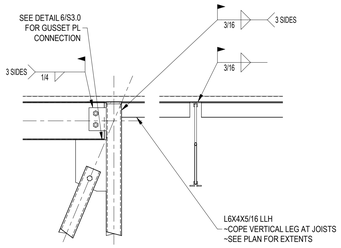


7 DRAG ANGLE AT STEEL COLUMN
3/4" = 1'-0"

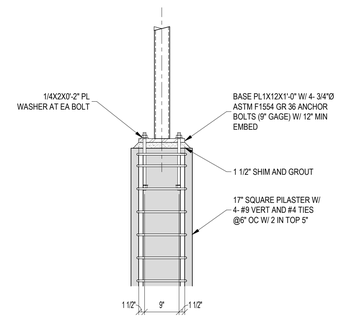


5 BRACED FRAME COLUMN BASE PLATE
3/4" = 1'-0"

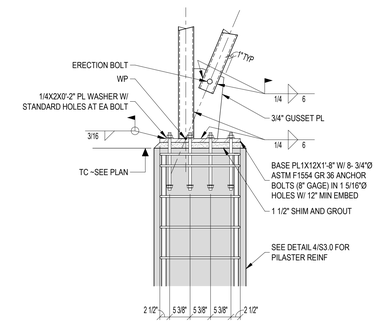


3 BRACED FRAME GUSSET BASE PLATE
3/4" = 1'-0"

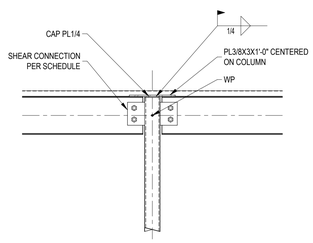


8 DRAG CONNECTION AT STEEL BEAM
3/4" = 1'-0"

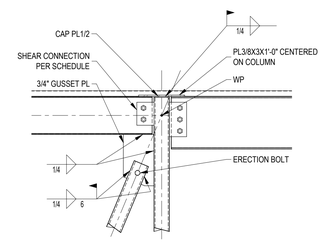


6 BRACED FRAME GUSSET PLATE
3/4" = 1'-0"

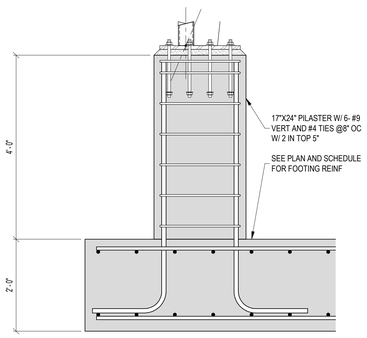


4 BRACED FRAME PILASTER AND FOOTING
3/4" = 1'-0"


TAB Associates
*The Architectural Balance*
0056 Edwards Village Blvd.
Suite 210
Edwards, CO 81632
(970) 766-1470
fax: (970) 766-1471
email: tab@vail.net
www.tabassociates.com

Civil Engineer
Alpine Engineering, Inc.
970-926-3373
Structural Engineer
Jirsa Hedrick Structural Eng.
303-318-6539
Mechanical Engineer
BG BuildingWorks, Inc.
970-949-6109
Electrical Engineer
BG BuildingWorks, Inc.
970-949-6108


Seal

# Strawberry Park Elementary
## 39620 Amethyst Drive
Steamboat Springs, CO

Revisions:

| No | Description | Date |
|---|---|---|
| | | |

Issue Dates:
DD's - 2/20/20
95% - 03/30/20
CD's - 04/06/20

Sheet Title:
**Braced Frame Elevations and Details**

Project No:
TAB-1935.02
JH-20191103

Sheet No:
S3.0

RCRBD Record Set
T.A.
05/14/2020

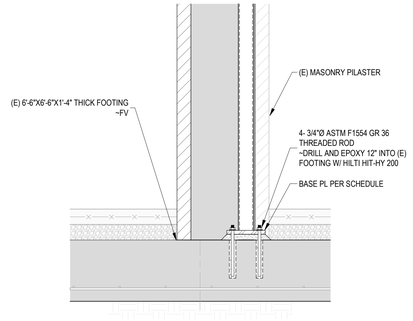


12 NEW STEEL COLUMN CONNECTION AT (E) FOOTING
3/4" = 1'-0"

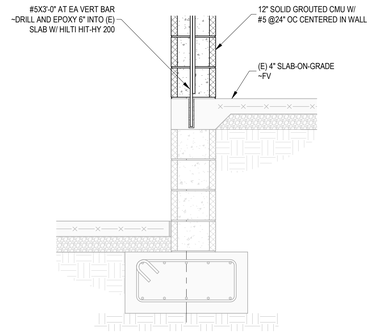


8 CMU WALL INFILL
3/4" = 1'-0"

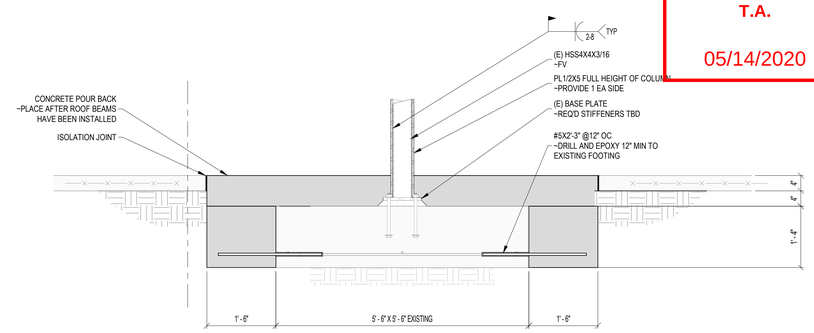


1 INTERIOR STEEL COLUMN FOUNDATION AT GRID H
3/4" = 1'-0"

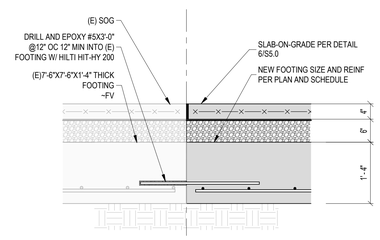


9 NEW FOOTING AT (E) FOOTING AT PRE-K ENTRY
3/4" = 1'-0"

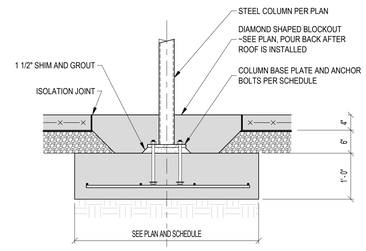


5 STEEL COLUMN FOUNDATION
3/4" = 1'-0"

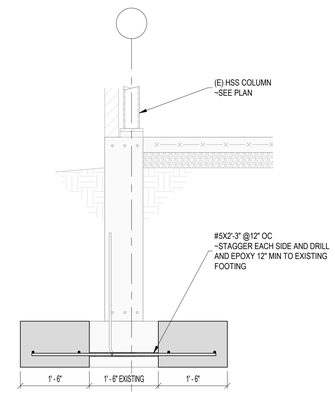


2 NEW STEEL COLUMN FOUNDATION AT GRID 11.5
3/4" = 1'-0"

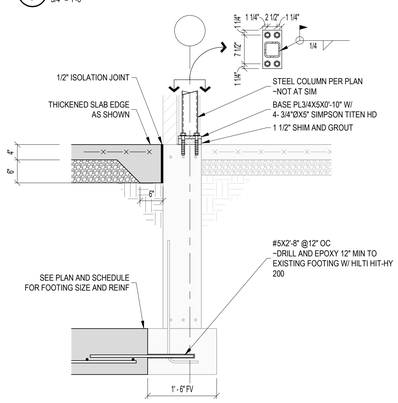


10 NEW FOOTING AT EXISTING FOUNDATION WALL
3/4" = 1'-0"

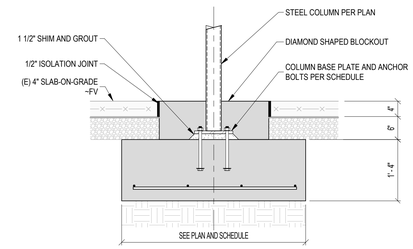


6 STEEL COLUMN FOUNDATION AT PRE-K ENTRY
3/4" = 1'-0"

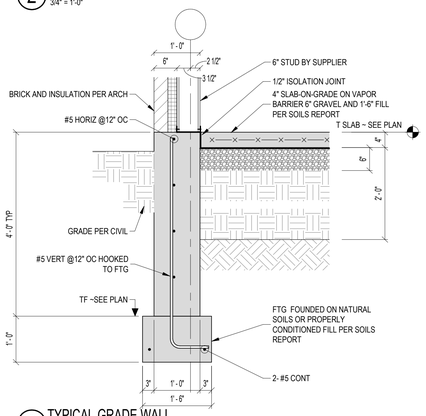


3 TYPICAL GRADE WALL
3/4" = 1'-0"

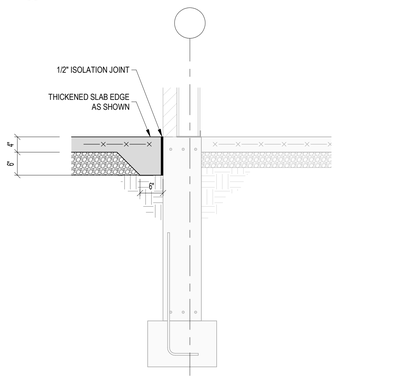


11 THICKENED SLAB EDGE AT EXISTING
3/4" = 1'-0"

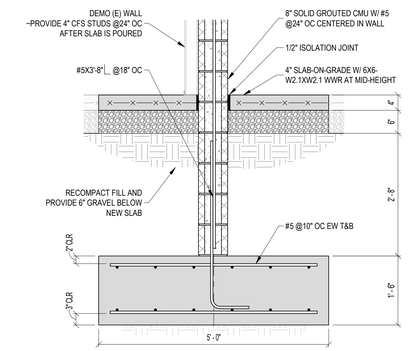


7 NEW CMU WALL AT KITCHEN
3/4" = 1'-0"

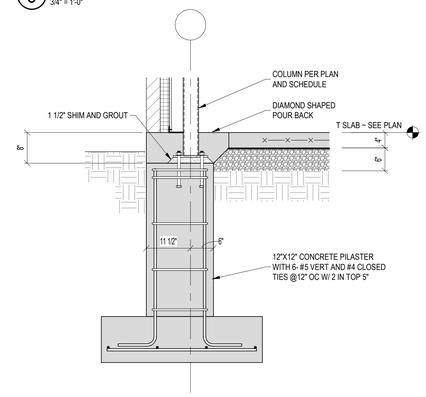


4 COLUMN PILASTER
3/4" = 1'-0"


TAB Associates
*The Architectural Balance*
0056 Edwards Village Blvd.
Suite 210
Edwards, CO 81632
(970) 766-1470
fax: (970) 766-1471
email: tab@vail.net
www.tabassociates.com
Civil Engineer
Alpine Engineering, Inc.
970-926-3373
Structural Engineer
Jirsa Hedrick Structural Eng.
303-318-6539
Mechanical Engineer
BG BuildingWorks, Inc.
970-949-6109
Electrical Engineer
BG BuildingWorks, Inc.
970-949-6108


Seal
COLORADO LICENSED
MICHAEL OLIVER JIRSA
44113
PROFESSIONAL ENGINEER
6/20

# Strawberry Park Elementary
# 39620 Amethyst Drive
Steamboat Springs, CO

Revisions:

| No | Description | Date |
|---|---|---|
| | | |

Issue Dates:
DD's - 2/20/20
95% - 03/30/20
CD's - 04/06/20

Sheet Title:
**Foundation Details**

Project No:
TAB-1935.02
JH-20191103

Sheet No:
S5.0

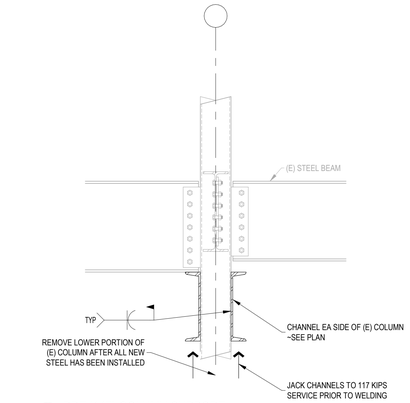


17 PRE-K (E) COLUMN SUPPORT
3/4" = 1'-0"

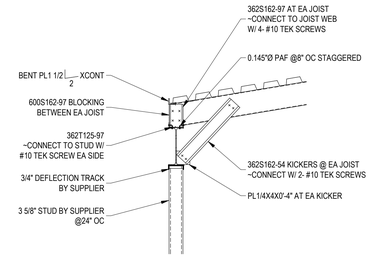


13 PENTHOUSE BEAM AT PERPENDICULAR JOIST
3/4" = 1'-0"

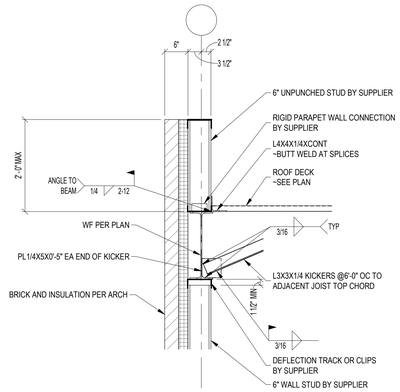


9 ROOF BEAM AT DECK BEARING
3/4" = 1'-0"

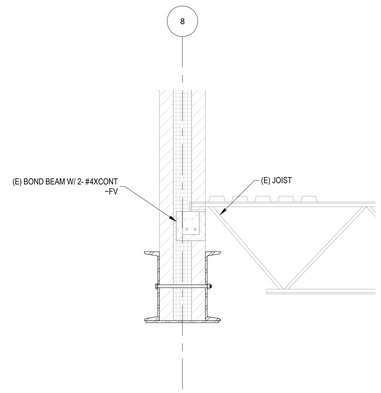


5 EXISTING JOISTS AT NEW GIRDER - GRID 8
3/4" = 1'-0"

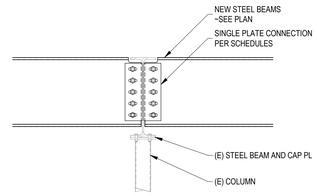


1 NEW BEAMS AT EXISTING BEAM/COLUMN
3/4" = 1'-0"

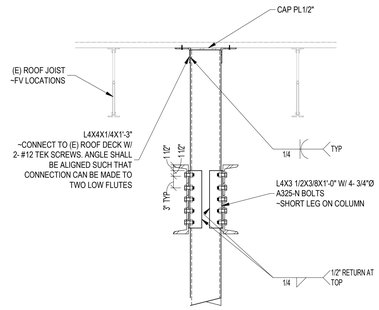


18 PRE-K COLUMN CHANNEL CONNECTION AT EAST SIDE
3/4" = 1'-0"

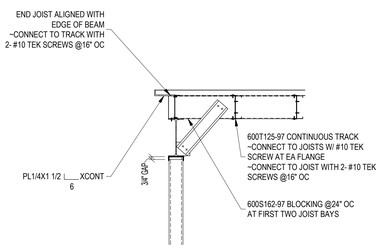


14 PENTHOUSE BEAM AT PARALLEL JOIST
3/4" = 1'-0"

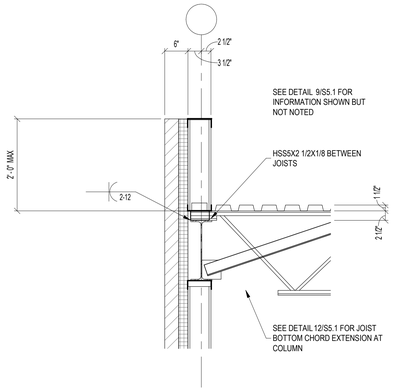


10 ROOF BEAM AT JOIST BEARING
3/4" = 1'-0"

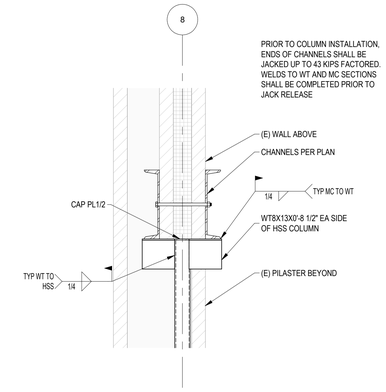


6 CHANNEL TO COLUMN CONNECTION
3/4" = 1'-0"

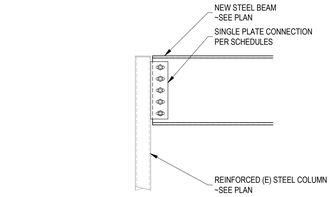


2 NEW BEAM AT (E) COLUMN
3/4" = 1'-0"

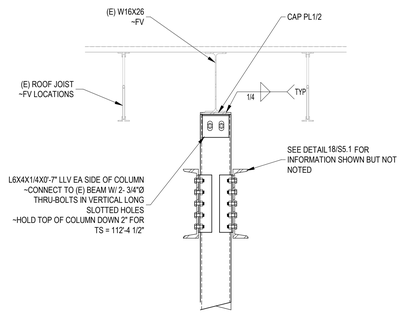


19 PRE-K COLUMN CHANNEL CONNECTION AT WEST SIDE
3/4" = 1'-0"

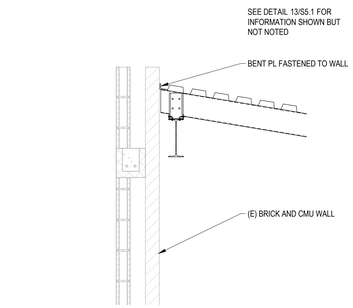


15 PENTHOUSE FRAMING AT (E) SOUTH WALL
3/4" = 1'-0"

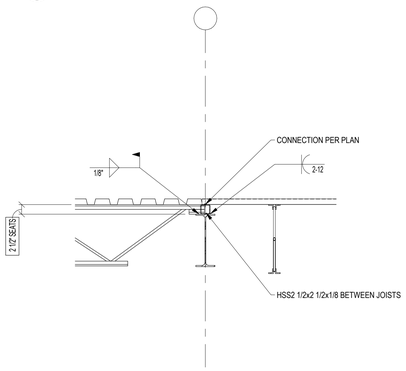


11 BEAM AT JOIST BEARING
3/4" = 1'-0"

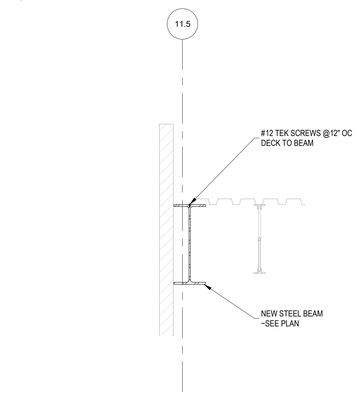


7 NEW BEAM AT (E) DECK - GRID 11.5
3/4" = 1'-0"

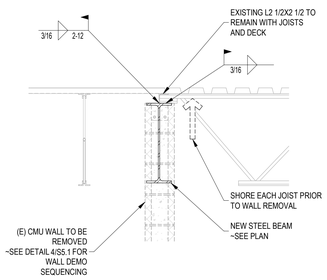


3 EXISTING JOISTS AT NEW BEAM
3/4" = 1'-0"

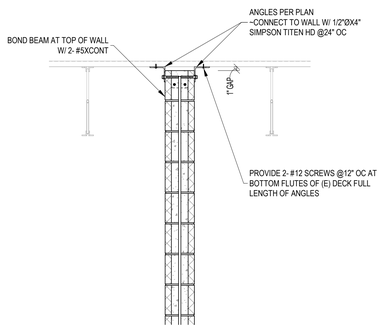


20 GRID D.8 TOP OF WALL CONECTION
3/4" = 1'-0"

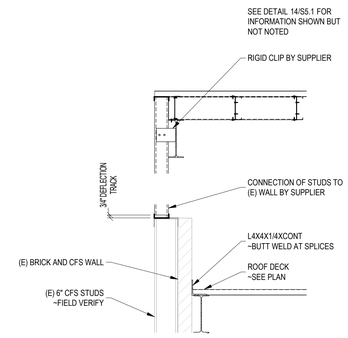


16 PENTHOUSE FRAMING AT (E) WEST WALL
3/4" = 1'-0"

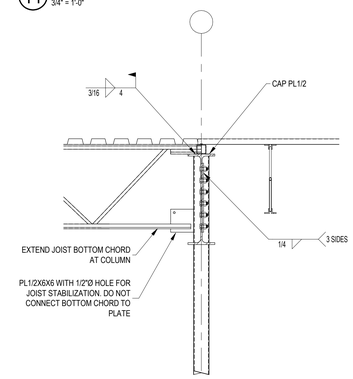


12 JOIST BEARING AT STEEL COLUMN
3/4" = 1'-0"

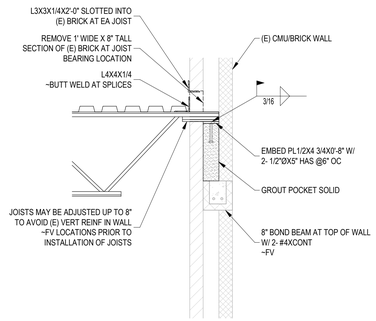


8 JOIST BEARING AT (E) WALL
3/4" = 1'-0"

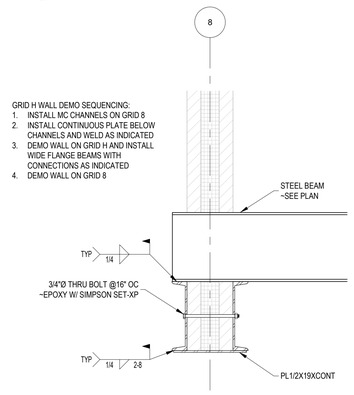


4 NEW BEAM AT NEW GIRDER - GRID 8
3/4" = 1'-0"

RCRBD Record Set
T.A.
05/14/2020

TAB Associates
*The Architectural Balance*
0056 Edwards Village Blvd.
Suite 210
Edwards, CO 81632
(970) 766-1470
fax: (970) 766-1471
email: tab@vail.net
www.tabassociates.com
Civil Engineer
Alpine Engineering, Inc.
970-926-3373
Structural Engineer
Jirsa Hedrick Structural Eng.
303-318-6539
Mechanical Engineer
BG BuildingWorks, Inc.
970-949-6109
Electrical Engineer
BG BuildingWorks, Inc.
970-949-6108

Seal
COLORADO LICENSED
MICHAEL OLIVER JIRSA
44113
PROFESSIONAL ENGINEER
6/20

# Strawberry Park Elementary
## 39620 Amethyst Drive
Steamboat Springs, CO

Revisions:

| No | Description | Date |
|---|---|---|
| | | |

Issue Dates:
DD's - 2/20/20
95% - 03/30/20
CD's - 04/06/20

Sheet Title:
**Roof Details**

Project No:
TAB-1935.02
JH-20191103

Sheet No:
S5.1

RCRBD Record Set
T.A.

05/14/2020

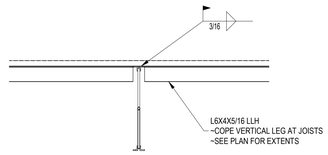


5 DRAG ANGLE AT BAR JOISTS
3/4" = 1'-0"

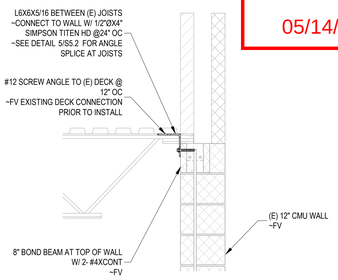


1 GRID K TOP OF WALL CONECTION
3/4" = 1'-0"

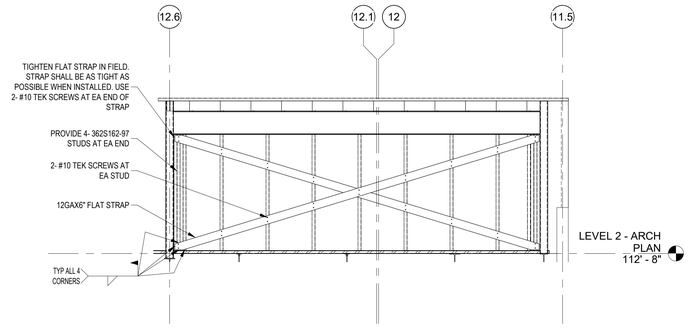


6 PENTHOUSE NORTH WALL
3/8" = 1'-0"

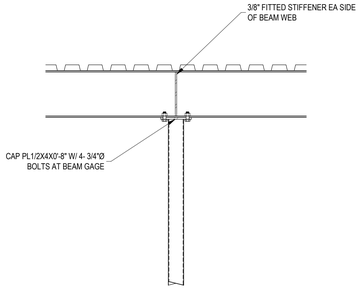


2 CANTILEVER COLUMN CONNECTION
3/4" = 1'-0"

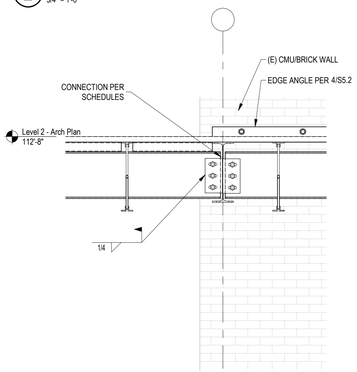


3 DRAG ANGLE AT STEEL COLUMN
3/4" = 1'-0"

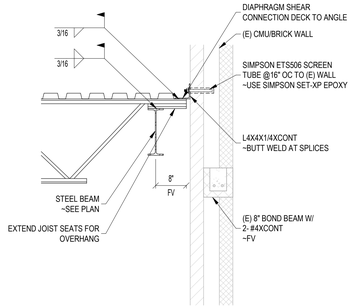


4 STEEL FRAMING AT (E) WALL
3/4" = 1'-0"


TAB Associates
*The Architectural Balance*
0056 Edwards Village Blvd.
Suite 210
Edwards, CO 81632
(970) 766-1470
fax: (970) 766-1471
email: tab@vail.net
www.tabassociates.com

Civil Engineer
Alpine Engineering, Inc.
970-926-3373
Structural Engineer
Jirsa Hedrick Structural Eng.
303-318-6539
Mechanical Engineer
BG BuildingWorks, Inc.
970-949-6109
Electrical Engineer
BG BuildingWorks, Inc.
970-949-6108


Seal
COLORADO LICENSED
MICHAEL OLIVER JIRSA
44113
PROFESSIONAL ENGINEER
6/20

# Strawberry Park Elementary
## 39620 Amethyst Drive
### Steamboat Springs, CO

Revisions:

| No | Description | Date |
|---|---|---|
| | | |

Issue Dates:
DD's - 2/20/20
95% - 03/30/20
CD's - 04/06/20

Sheet Title:
**Roof Details**

Project No:
TAB-1935.02
JH-20191103

Sheet No:
S5.2

# MECHANICAL SYSTEMS LEGEND

## AIR DEVICE DESIGNATION KEY

(A) 150 / 12x6

- TYPE OF AIR DEVICE RE: GRD SCHEDULE.
- # = AIR QUANTITY (CFM)
  CA = COMB. AIR
  OSA = OUTSIDE AIR
  RET = RETURN
  EXH = EXHAUST
  XFR = TRANSFER
- SIZE (INCHES) OR MINIMUM FREE AREA REQUIRED IN SQUARE FEET

(B) XFR 12x6

- INDICATES AIR INLET DEVICE

NOTE:
FOR STANDARD MODULE SIZE REGISTERS, SIZE GIVEN IS NECK SIZE. REFER TO GRD SCHEDULE FOR MODULE SIZE.

## DUCT/PIPE RISER DESIGNATION KEY

PR / 203

PIPING:
CH - CHILLED WATER
DW - DOMESTIC WATER
HW - HEATING WATER
G - GAS PIPING
WV - WASTE AND/OR VENT
PR - PIPING RISER (MISC TYPES)
ST - STORM DRAIN
ST(OF) - SECONDARY STORM DRAIN

AIR SIDE:
EA/EXH - EXHAUST AIR
OA/OSA - OUTSIDE AIR
RA - RETURN AIR
SA - SUPPLY AIR

RISER NUMBER

## REFERENCE SAMPLE

RE: B/M400 FFI

- FFI = FOR FURTHER INFORMATION
  FCT = FOR CONTINUATION
- SHEET NUMBER
- DRAWING NUMBER OR DIAGRAM LETTER
- REFER TO:

## NOTES

1. ALL SYMBOLS, ABBREVIATIONS, AND DESIGNATIONS ON LEGEND SHEET ARE NOT NECESSARILY USED ON THIS PROJECT.
2. THIS DRAWING SET CONSISTS OF DATA GENERATED, IN PART, BY OTHER PARTIES. NOT ALL SYMBOLOGIES AND NOTATION CONVENTIONS OCCURRING IN THIS DRAWING SET ARE NECESSARILY DEFINED ON THESE LEGENDS. CONSULT THE ENGINEER IN THE EVENT SYMBOLOGY OR NOTATION INTERPRETATION IS REQUIRED.

## DUCTWORK LEGEND

| ROUND 3D | ROUND PLAN | DESCRIPTION | RECTANGULAR PLAN | RECTANGULAR 3D |
|---|---|---|---|---|
| | | DUCT RISER | | |
| | | DUCT DROP | | |
| | | 90° ELBOW DN. (NEGATIVE PRESSURE) | | |
| | | 90° ELBOW DN. (POSITIVE PRESSURE) | | |
| | | 90° ELBOW UP (NEGATIVE PRESSURE) | | |
| | | 90° ELBOW UP (POSITIVE PRESSURE) | | |
| | | SIZE OR SHAPE TRANSITION | | |
| | | ROUND FLEXIBLE DUCT CONNECTION | | |
| | | 90° RADIUS ELBOW | | |
| - | - | 90° MITERED ELBOW W/ TURNING VANES | | |
| | | 90° STRAIGHT TEE | | |
| | | 90° CONICAL TEE | | |
| | | 45° BRANCH | | |
| | | 45° CONICAL BRANCH | | |
| | F/S | COMBINATION FIRE AND SMOKE DAMPER | F/S | |
| | | FIRE DAMPER | | |
| | | SMOKE DAMPER | | |
| | | MANUAL BALANCING DAMPER | | |
| | | MOTORIZED DAMPER | | |
| | BDD | BACKDRAFT DAMPER | BDD | |
| | D | OFFSET TO CHANGE ELEVATION D = DROP R=RISE | R | |
| - | 14ø | DUCT SIZE TAG: FIRST NUMBER = PLAN WIDTH | 14x12 | - |

## FIXTURE CONNECTION SCHEDULE

| DESCRIPTION | TAG | HW | CW | WASTE | VENT |
|---|---|---|---|---|---|
| WATER CLOSET (FLUSH VALVE) | WC | - | 1" | 4" | 2" |
| WATER CLOSET (FLUSH TANK) | WC | - | 1/2" | 4" | 2" |
| URINAL (BLOWOUT) | UR | - | 1" | 2" | 1-1/2" |
| URINAL (WASHDOWN) | UR | - | 3/4" | 2" | 1-1/2" |
| URINAL (WATERLESS) | UR | - | - | 2" | 1-1/2" |
| LAVATORY | LAV | 1/2" | 1/2" | 1-1/2" | 1-1/2" |
| HAND SINK | HS | 1/2" | 1/2" | 1-1/2" | 1-1/2" |
| SERVICE SINK | SS | 1/2" | 1/2" | 3" | 2" |
| MOP SERVICE BASIN | MSB | 3/4" | 3/4" | 3" | 2" |
| DRINKING FOUNTAIN/WATER COOLER | DF | - | 1/2" | 1-1/2" | 1-1/2" |
| KITCHEN SINK W/ OR W/O DISPOSAL | KS | 1/2" | 1/2" | 2" | 1-1/2" |
| SHOWER | SH/SHWR | 3/4" | 3/4" | 2" | 1-1/2" |
| SHOWER/BATHTUB | SH/TUB | 3/4" | 3/4" | 2" | 1-1/2" |
| BATHTUB | TUB | 3/4" | 3/4" | 2" | 1-1/2" |
| CLOTHES WASHER OUTLET BOX | CW | 1/2" | 1/2" | 2" | 1-1/2" |
| DISH MACHINE ROUGH-IN | DM | 3/4" | 3/4" | 2" | 1-1/2" |
| DISHWASHER ROUGH-IN | DW | 1/2" | - | 2" | 1-1/2" |
| BAR SINK | BS | 1/2" | 1/2" | 1-1/2" | 1-1/2" |
| FLOOR SINK | FS | - | - | 2" | 1-1/2" |
| REFRIG/ICE MAKER BOX | FRIG | - | 1/2" | - | - |
| FLOOR DRAIN | FD | - | - | 2" | 1-1/2" |
| TRENCH DRAIN | TD | - | - | 3" | 2" |
| WORK SINK | WS | 3/4" | 3/4" | 2" | 1-1/2" |
| HOSE BIB | HB | - | 3/4" | - | - |

NOTES:

1. SIZES SHOWN ARE MINIMUM PIPE SIZES TO A SINGLE FIXTURE. LARGER SIZES MAY BE INDICATED ON PLANS WHERE REQUIRED.
2. MINIMUM DOMESTIC PIPE SIZE TO 2 OR MORE FIXTURES IS 3/4".
3. RE: MANUFACTURER'S INSTALLATION INSTRUCTIONS FOR INDIRECT WASTE SIZES.
4. WASTE AND VENT SIZES SHOWN ABOVE APPLY TO INDIVIDUAL VENTING ONLY. WHERE ALLOWED, INDIVIDUAL VENT CONNECTIONS MAY BE OMITTED OR SIZES MAY VARY WHEN CIRCUIT VENTS, COMMON VENTS, WASTE STACK VENTS, WET VENTS, OR COMBINATION DRAIN AND VENT SYSTEMS ARE USED. PRIOR APPROVAL FROM THE ENGINEER IS REQUIRED TO USE THESE ALTERNATIVE VENTING METHODS.
5. PROVIDE TRAP PRIMER FOR ALL FLOOR DRAINS AND FLOOR SINKS NOT LOCATED IN FOOD SERVICE AREAS.
6. MINIMUM SIZE FOR WASTE AND VENT PIPING BENEATH SLAB IS 2".
7. ALL FIXTURES LISTED ARE NOT NECESSARILY USED ON THIS PROJECT.
8. REFER TO APPLIANCE SCHEDULES (BY OTHERS) FOR ADDITIONAL PLUMBING FIXTURE CONNECTIONS SUCH AS INSTA-HOTS, COFFEE MAKERS, AND GARBAGE DISPOSALS.
9. PROVIDE ICE MAKER BOX ROUGH IN W/ 1/2"CW CONNECTION FOR ALL REFRIGERATOR LOCATIONS.
10. DESIGNER TO CONFIRM FLOW RATE OF FLOOR DRAINS, FLOOR SINKS, ETC. WITH ACTUAL SIZE REQUIRED.

## EQUIPMENT ABBREVIATIONS

| | |
|---|---|
| AHU | AIR HANDLING UNIT |
| AS | AIR SEPARATOR |
| B | BOILER (HOT WATER) |
| BB | BASE BOARD |
| BT | BUFFER TANK |
| CC | COOLING COIL |
| CH | CHILLER |
| CP OR P | CIRC PUMP |
| CT | COOLING TOWER |
| CUH | CABINET UNIT HEATER |
| CV | CONSTANT VOLUME BOX |
| DC | DUCT COIL |
| DEF | DISHWASHER EXHAUST FAN |
| EBH | ELECTRIC BASEBOARD HEATER |
| ECU | EVAPORATIVE COOLING UNIT |
| EF | EXHAUST FAN |
| ERU | ENERGY RECOVERY UNIT |
| ET | EXPANSION TANK |
| EWH | ELECTRIC WATER HEATER |
| F | FURNACE |
| FC | FAN COIL |
| FP | FAN POWERED BOX |
| GF | GLYCOL FEEDER |
| H | HUMIDIFIER |
| HC | HEATING COIL |
| HP | HEAT PUMP |
| HX | HEAT EXCHANGER |
| KEF | KITCHEN EXHAUST FAN |
| MAU | MAKE-UP AIR UNIT |
| MCC | MOTOR CONTROL CENTER |
| MV | MIXING VALVE |
| P | PUMP (SEE PIPING LEGEND FOR DETAILS) |
| RF | RETURN (OR RELIEF) AIR FAN |
| RZ | RADIANT ZONE |
| SA | SNOWMELT AREA |
| SB | SUMP BASIN |
| SF | SUPPLY FAN |
| ST | STORAGE TANK |
| TMV | THERMOSTATIC MIXING VALVE |
| UH | UNIT HEATER |
| VR | VARIABLE VOLUME BOX W/ REHEAT |
| VV | VARIABLE VOLUME BOX |
| WH | WATER HEATER |

## PIPING SYMBOLS

- 90° ELBOW DN
- 90° ELBOW UP
- TEE DOWN
- TEE UP
- BUTTERFLY VALVE
- SHUT OFF (BALL, GATE, BUTTERFLY)
- GLOBE VALVE
- CHECK VALVE
- FLOW CONTROL VALVE
- BALL VALVE
- PLUG OR BALANCING VALVE
- FLOW BALANCING VALVE
- PLUG VALVE IN RISER
- GATE OR GLOBE VALVE IN RISER
- DRAIN VALVE W/ HOSE END
- TEMPERATURE CONTROL VALVE (2-WAY)
- TEMPERATURE CONTROL VALVE (3-WAY)
- PRESSURE REDUCING VALVE
- SOLENOID VALVE
- VENTURI/FLOW INDICATOR
- PUMP & EQUIPMENT CONNECTOR
- PIPE UNION
- DOUBLE CHECK BACKFLOW PREVENTER
- PIPE ANCHOR
- PIPE EXPANSION JOINT
- FLEXIBLE CONNECTOR
- SAFETY RELIEF VALVE
- AIR VENT
- PRESSURE - TEMP. TAP
- PRESSURE GAUGE W/ PIG TAIL & COCK
- THERMOMETER
- VACUUM BREAKER
- HORIZONTAL CLEANOUT
- VERTICAL CLEANOUT
- FLOOR DRAIN
- FLOOR SINK
- ROOF DRAIN
- STRAINER W/ BLOW-OFF VALVE
- SHOCK ABSORBER
- FS — FLOW SWITCH
- H B W H — HOSE BIBB or WALL HYDRANT
- STEAM TRAP:
  - FT-FLOAT & THERMOSTATIC
  - TD-THERMODYNAMIC
  - IB-INVERTED BUCKET
  - TS-THERMOSTATIC
  - BP-BALANCED PRESSURE
- STEAM TRAP TEST CHAMBER
- TC — TEMPERATURE CONTROLLER OR SENSOR

## ABBREVIATIONS

| | |
|---|---|
| AAV | AIR ADMITTANCE VALVE |
| AFF | ABOVE FINISHED FLOOR |
| AFG | ABOVE FINISHED GRADE |
| AUTO | AUTOMATIC |
| ABV | ABOVE |
| BCS | BUILDING CONTROL SYSTEM |
| BDD | BACK DRAFT DAMPER |
| BLDG | BUILDING |
| BFG | BELOW FINISHED GRADE |
| BOP | BOTTOM OF PIPE FROM FINISHED FLOOR |
| B/N | BETWEEN |
| C | COMMON |
| CA | COMBUSTION AIR |
| CC | CONTROLS CONTRACTOR |
| CFM | CUBIC FEET PER MINUTE (AIR FLOW RATE) |
| CIP | CAST IN PLACE |
| CLG | CEILING (OR COOLING) |
| CONC | CONCRETE |
| COND | CONDENSATE |
| CONN | CONNECT (OR CONNECTION) |
| CONTR'R | CONTRACTOR |
| CO | CLEANOUT |
| COTG | CLEANOUT TO GRADE |
| CW | DOMESTIC COLD WATER |
| DN | DOWN |
| (E) | EXISTING |
| EA | EXHAUST AIR |
| EAT | ENTERING AIR TEMPERATURE |
| EC | ELECTRICAL CONTRACTOR |
| EXH | EXHAUST |
| EWT | ENTERING WATER TEMPERATURE |
| FA | FREE AREA |
| FACP | FIRE ALARM CONTROL PANEL |
| FBO | FURNISHED BY OWNER |
| FCO | FLOOR CLEANOUT |
| FCT | FOR CONTINUATION |
| FFI | FOR FURTHER INFORMATION |
| FSD | COMBINATION FIRE/SMOKE DAMPER |
| GC | GENERAL CONTRACTOR |
| GHX | GROUND HEAT EXCHANGER |
| GPM | GALLONS PER MINUTE (WATER FLOW RATE) |
| HP | HORSE POWER |
| HW | DOMESTIC HOT WATER |
| HWC | HOT WATER RECIRCULATION |
| KW | KILOWATTS |
| LAT | LEAVING AIR TEMPERATURE |
| LF | LINEAR FOOT |
| LWT | LEAVING WATER TEMPERATURE |
| MC | MECHANICAL CONTRACTOR |
| MFR | MANUFACTURER |
| MOD | MOTOR OPERATED DAMPER |
| (N) | NEW |
| NC | NORMALLY CLOSED |
| NEC | NATIONAL ELECTRIC CODE |
| NIC | NOT IN CONTRACT |
| NO | NORMALLY OPEN |
| OA | OUTSIDE AIR |
| OBD | OPPOSED BLADE VOLUME DAMPER |
| OC | ON CENTER |
| OSA | OUTSIDE AIR |
| RA | RETURN AIR |
| REQ'D | REQUIRED |
| RE: | REFER TO: |
| REQ'MTS | REQUIREMENTS |
| SA | SUPPLY AIR |
| SF | SQUARE FOOT (FEET) |
| SP | STATIC PRESSURE |
| SS | STAINLESS STEEL |
| TA | THROW-AWAY (OR TRANSFER AIR) |
| TYP | TYPICAL |
| UNO | UNLESS NOTED OTHERWISE |
| VTR | VENT THROUGH ROOF |
| W/ | WITH |
| W/O | WITHOUT |
| WCO | WALL CLEANOUT |
| XFR | TRANSFER |

## PLAN SYMBOLS

- CONTROL PANEL/RADIANT MANIFOLD
- CO2 — CARBON DIOXIDE SENSOR
- CO — CARBON MONOXIDE SENSOR
- T — THERMOSTAT
- S — REMOTE TEMPERATURE SENSOR
- H — HUMIDISTAT
- SP — DUCT STATIC PRESSURE SENSOR
- P — ROOM PRESSURE SENSOR
- EPO — EMERGENCY POWER OFF SWITCH
- P — PLUMBING RISER
- HEATING WATER RISER
- FIRE RISER
- HVAC RISER
- DIAGRAM CONTINUATION REFERENCE
- SECTION CUT LETTER/SHEET SHOWN ON
- POINT OF DISCONNECTION
- POINT OF NEW CONNECTION
- ACCESS PANEL
- SNOWMELT MANIFOLD

## PIPING DESIGNATIONS

HYDRONIC PIPING

| | |
|---|---|
| — CS — | CONDENSER SUPPLY |
| — CR — | CONDENSER RETURN |
| — CHS — | CHILLED WATER SUPPLY |
| — CHS — | CHILLED WATER SUPPLY |
| — CCS — | CLOSED CONDENSER SUPPLY |
| — CCR — | CLOSED CONDENSER RETURN |
| — FCS — | FLOOR COOLING SUPPLY |
| — FCR — | FLOOR COOLING RETURN |
| — GF — | GLYCOL FEED |
| — GLS — | GEOTHERMAL (OR GROUND) LOOP SUPPLY |
| — GLR — | GEOTHERMAL (OR GROUND) LOOP RETURN |
| — HWS — | HEATING WATER SUPPLY |
| — HWR — | HEATING WATER RETURN |
| —HWS(LT)— | HEATING WATER SUPPLY (LOW TEMP) |
| —HWR(LT)— | HEATING WATER RETURN (LOW TEMP) |
| —HWS(HT)— | HEATING WATER SUPPLY (HIGH TEMP) |
| —HWR(HT)— | HEATING WATER RETURN (HIGH TEMP) |
| —HWS(HP)— | HEATING WATER SUPPLY (HEAT PUMP) |
| —HWR(HP)— | HEATING WATER RETURN (HEAT PUMP) |
| — RFS — | RADIANT FLOOR SUPPLY |
| — RFR — | RADIANT FLOOR RETURN |
| — SHWS — | SOLAR HEATING WATER SUPPLY |
| — SHWR — | SOLAR HEATING WATER RETURN |
| — SMS — | SNOWMELT SUPPLY |
| — SMR — | SNOWMELT RETURN |

STEAM & CONDENSATE PIPING

| | |
|---|---|
| — HPS — | HIGH PRESURE STEAM |
| — HPR — | HIGH PRESURE CONDENSATE RETURN |
| — LPS — | LOW PRESURE STEAM |
| — LPR — | LOW PRESURE CONDENSATE RETURN |
| — MPS — | MEDIUM PRESURE STEAM |
| — MPR — | MEDIUM PRESURE CONDENSATE RETURN |
| — PC — | PUMPED CONDENSATE |

PLUMBING PIPING

| | |
|---|---|
| — G — | NATURAL GAS |
| — MG — | MEDIUM PRESSURE GAS |
| — PG — | PROPANE GAS |
| — LPG — | LIQUID PROPANE GAS |
| — PD — | PROPANE DRAIN |
| — D — | DRAIN PIPE |
| — FOS — | FUEL OIL SUPPLY |
| — FOR — | FUEL OIL RETURN |
| — FOV — | FUEL OIL VENT |
| — FOF — | FUEL OIL FILL |
| — RS — | REFRIGERANT SUCTION |
| — RL — | REFRIGERANT LIQUID |
| — CW — | DOMESTIC COLD WATER (CW) |
| — HW — | DOMESTIC HOT WATER (HW) |
| — HWC — | HOT WATER RECIRCULATION (HWC) |
| — NS — | NON-SOFTENED DOMESTIC WATER |
| — F — | FIRE LINE |
| — AW — | ACID WASTE |
| — AV — | ACID VENT |
| — GW — | GREASE WASTE |
| — GV — | GREASE VENT |
| — PW — | PUMPED WASTE |
| — W — | WASTE |
| — V — | VENT |
| — SD — | SECONDARY DRAIN |
| — SO — | SAND AND OIL WASTE |
| — ST — | STORM DRAIN |
| —ST(OF)— | STORM DRAIN OVERFLOW |
| — CA — | COMPRESSED AIR |
| — MA — | MEDICAL AIR |
| — O2 — | OXGEN |
| — VAC — | VACUUM |
| — CO2 — | CARBON DIOXIDE |
| — N2O — | NITROUS OXIDE |
| — N2 — | NITROGEN |
| — IA — | INSTRUMENT AIR |
| — WAGD — | WASTE ANESTHETIC GAS DISPOSAL |

## PROJECT ALTITUDE

6730' ABOVE SEA LEVEL

## MECHANICAL EQUIPMENT WIRING AND CONNECTIONS

| | ITEM | FURNISHED UNDER | SET IN PLACE OR MTD. UNDER | WIRED/ CONNECTED UNDER |
|---|---|---|---|---|
| 1 | EQUIPMENT MOTORS AND THERMAL OVERLOADS, RESISTANCE HEATERS. | MD | MD | ED |
| 2 | VFD'S, MOTOR CONTROLLERS; MAGNETIC STARTERS, REDUCED VOLTAGE STARTERS AND OVERLOAD RELAYS. | MD | ED(a) | ED |
| 3 | DISCONNECT SWITCHES (FUSED OR NON-FUSED), HP RATED SWITCHES, THERMAL OVERLOAD SWITCHES AND FUSES AND MANUAL OPERATING SWITCHES. | ED(a) | ED(a) | ED |
| 4 | PUSHBUTTON STATIONS, PILOT LIGHTS, MULTI-SPEED SWITCHES, FLOAT SWITCHES, THERMOSTATS, CONTROL RELAYS, TIMECLOCKS, CONTROL TRANSFORMERS, CONTROL PANELS, MOTOR VALVES, DAMPER ACTUATORS, SOLENOID VALVES, EP AND PE SWITCHES AND INTERLOCKS. | MD | MD | MD(b) |
| 5 | 120 VOLT POWER FOR BAS PANELS, FIRE PROTECTION AND BOILER CONTROLS. | ED | ED | ED |
| 6 | FIRE/SMOKE DAMPERS AND ELEVATOR VENT DAMPERS. | MD | MD | ED(c) |

## MECHANICAL SHEET INDEX

ISSUE LOG

RCRBD Record Set
T.A.
05/14/2020


| # | TITLE | DD - 02.20.2020 | 2020.03.13 - CD PROGRESS | 2020.03.30 - 95% CD | 2020.04.06 - PERMIT SET |
|---|---|---|---|---|---|
| M0.0 | MECHANICAL COVER SHEET | √ | √ | √ | √ |
| M0.1 | MECHANICAL SCHEDULES | √ | √ | √ | √ |
| M1.1 | SNOWMELT PLAN | √ | √ | √ | √ |
| MD2.1 | MAIN LEVEL AREA A DEMO MECHANICAL PLAN | √ | √ | √ | √ |
| MD2.2 | PRE-K PLAN AREA B DEMO MECHANICAL PLAN | √ | √ | √ | √ |
| MD3.1 | ROOF AREA A DEMO MECHANICAL PLAN | √ | √ | √ | √ |
| M2.1 | MAIN LEVEL AREA A MECHANICAL PLAN | √ | √ | √ | √ |
| M2.2 | PRE-K PLAN AREA B MECHANICAL PLAN | √ | √ | √ | √ |
| M3.1 | ROOF AREA A MECHANICAL PLAN | √ | √ | √ | √ |
| MC2.1 | MAIN LEVEL AREA A MECHANICAL COORDINATION CEILING PLAN | | | √ | √ |
| MC2.2 | PRE-K PLAN AREA B MECHANICAL COORDINATION CEILING PLAN | | | √ | √ |
| MPD2.1 | MAIN LEVEL AREA A DEMO PLUMBING PLAN | √ | √ | √ | √ |
| MPD2.2 | PRE-K PLAN AREA B DEMO PLUMBING PLAN | √ | √ | √ | √ |
| MP2.1 | MAIN LEVEL AREA A PLUMBING PLAN | √ | √ | √ | √ |
| MP2.2 | PRE-K PLAN AREA B PLUMBING PLAN | √ | √ | √ | √ |
| MP3.1 | ROOF AREA A PLUMBING PLAN | √ | √ | √ | √ |
| M4.1 | MECHANICAL DIAGRAMS | √ | √ | √ | √ |
| M4.2 | MECHANICAL DIAGRAMS | √ | √ | √ | √ |
| M4.3 | MECHANICAL DIAGRAMS | √ | √ | √ | √ |


ISSUE LOG KEY:
'√' ISSUED AS PART OF SET
' ' NOT PART OF SET
'*' ISSUED FOR INFORMATION ONLY

## REMODEL/RENOVATION NOTE:

CONTRACTOR MUST KEEP IN MIND THAT THIS IS A REMODEL PROJECT. READ GENERAL NOTES CAREFULLY. CONTRACTORS MUST COORDINATE NEW AND EXISTING CONDITIONS FOR INSTALLATION OF THE WORK.

CONTRACTOR SHALL NOTIFY ENGINEER IMMEDIATELY OF FIELD CONDITIONS DISCOVERED DURING DEMOLITION THAT VARY FROM THOSE INDICATED HEREIN.


TAB Associates
*The Architectural Balance*
0056 Edwards Village Blvd.
Suite 210
Edwards, CO 8132
(970) 766-1470
fax: (970) 766-1471
email: tab@vail.net
www.tabassociates.com


COLORADO REGISTERED PROFESSIONAL ENGINEER DAVID A. LYE 34666 4/6/2020

# STRAWBERRY PARK ELEMENTARY
## 39620 AMETHYST DRIVE
**Steamboat Springs, CO**

| Revisions: | | |
|---|---|---|
| No | Description | Date |
| | | |

Issue Dates:
PERMIT SET
04.06.2020

Sheet Title:
MECHANICAL COVER SHEET


BG BUILDINGWORKS
systems fulfilled
303.278.3820 www.bgbuildingworks.com
Project No. 10182.00

Copyright 2020
ALBUQUERQUE | AVON | DENVER | FORT COLLINS

Project No:
10182.00

Sheet No:
M0.0

# HYDRONIC AIR HANDLING UNIT SCHEDULE

NOTES:
A. FAN RPM SHALL NOT EXCEED 110% OF SCHEDULE VALUE.
B. NO EQUIPMENT SHALL BE SELECTED ABOVE 90% OF MOTOR NAME PLATE RATING.
C. LAT IS AT DISCHARGE OF RTU.
D. MOTORS SHALL BE EQUIPPED WITH AN ALTERNATE DISCHARGE PATH TO DIVERT ADVERSE SHAFT CURRENTS FROM MOTOR BEARINGS ON THE...
E. SUPPLY FAN EXTERNAL STATIC PRESSURE INCLUDES 0.5" WC FOR DIRTY FILTER ALLOWANCES.
F. PROVIDE UNIT WITH SINGLE POINT POWER CONNECTION AND CONVENIENCE RECEPTACLE.
G. PROVIDE SA AND RA DUCT DETECTOR, REFER TO CONTROL DIAGRAMS FOR ADDITIONAL INFORMATION.
H. CUSTOM 8" BASE RAIL. CONTRACTOR TO FIELD COORDINATE DEPTH WITH ROOF INSULATION THICKNESS.
J. PROVIDE INSULATED CABINET, AND INSULATED CABINET FOR HWS/R CONNECTIONS.

| | | | | SUPPLY FAN | | | | | | COOLING | | | | HEATING | | | | | | | | ELECTRICAL | | | | | | | |
|---|---|---|---|---|---|---|---|---|---|---|---|---|---|---|---|---|---|---|---|---|---|---|---|---|---|---|---|---|---|
| MARK | SERVICE | TYPE | OUTSIDE AIR (CFM) | CFM | MIN. CFM | ESP @ SL (IN WC) | ESP @ ALT (IN WC) | BHP | HP | EAT DB/WB (°F) | LAT DB/WB (°F) | SENSIBLE MBH | TOTAL MBH | EAT DB (°F) | LAT DB (°F) | SENSIBLE MBH | EWT (°F) | LWT (°F) | GPM | MAX WTR PD (FT HEAD) | FILTER | VOLTAGE | PHASE | FLA | MCA | MOCP | OPER. WEIGHT (LBS) | MANUFACTURER & MODEL # | REMARKS |
| AHU-2 | CAFETERIA, ART, MUSIC | INDOOR | 4600 | 6500 | 1880 | 1.80 | 1.50 | 3.4 | 5 | 84 | 55 | 156 | 175 | 8 | 55 | 263 | 140 | 115 | 22 | 3.00 | MERV 8 | 208 | 3 | 14.0 | 17.5 | 30 | 2560 | CARRIER 39M 14W | DEMAND CONTROLLED VENTILATION; .NOTE A, B, C, D, E, F, G |

# FAN POWERED BOX SCHEDULE (HYDRONIC REHEAT)

NOTES:
A:

| | | | | | | | HYDRONIC REHEAT COIL | | | | | | | FAN | | | | | | |
|---|---|---|---|---|---|---|---|---|---|---|---|---|---|---|---|---|---|---|---|---|
| MARK | SERVICE | TYPE | INLET DIA. (IN.) | MAX. COOLING CFM | PLENUM FAN CFM | HEATING CFM | EAT DB (°F) | LAT DB (°F) | SENSIBLE MBH | EWT (°F) | LWT (°F) | GPM | MAX WATER P.D. (IN WC) | HP | VOLT | PHASE | MIN. INLET S.F. @ SP (IN. W.C.) | MANUFACTURER & MODEL # | ACCESSORIES | REMARKS |
| (E)FPB-1-9 | PRE-K EAST | HYDRONIC | 12 | 1600 | 1600 | 480 | 55 | 85 | 40.1 | 140 | 100 | 2.4 | 0.50 | 3/4 | 3 | 480 | 1.0 | TITUS DTQ5 | 2- WAY VALVE | EXISTING FPB TO REMAIN FOR REUSE |
| (E)FPB-1-10 | PRE-K WEST | HYDRONIC | 12 | 1500 | 1500 | 450 | 55 | 85 | 38.6 | 140 | 100 | 2.3 | 0.50 | 3/4 | 3 | 480 | 1.0 | TITUS DTQ5 | 2-WAY VALVE | EXISTING FPB TO REMAIN FOR REUSE |

# MULTI ZONE VENTILATION SCHEDULE

VENTILATION EQUATION VARIABLE DEFINITIONS:
BREATHING ZONE OUTDOOR AIRFLOW, Vbz
ZONE FLOOR AREA, Az
ZONE POPULATION, Pz
AREA OUTDOOR AIR RATE, Ra
PEOPLE OUTDOOR AIR RATE, Rp
ZONE AIR DISTRIBUTION EFFECTIVENESS, Ez
ZONE OUTDOOR AIRFLOW, Voz
SYSTEM OUTDOOR AIR INTAKE FLOW RATE, Vot
ZONE PRIMARY OUTDOOR AIR FRACTION, Zp
ZONE PRIMARY AIRFLOW, Vpz
SYSTEM VENTILATION EFFICIENCY, SYSTEM Ev
ZONE VENITALION EFFICIENCY, ZONE Ev

VENTILATION EQUATIONS:
Vbz = Rp * Pz + Ra * Az (EQUATION 4-1)
Voz = Vbz / Ez (EQUATION 4-2)
Zp = Voz / Vpz (EQUATION 4-5)
Ev = (Table 403.3.1.1.2.3.2)
Vou = ∑ (Vbz), ASSUMING D=1 (EQUATION 4-6)
Vot = Vou /(SYSTEM Ev) (EQUATION 4-8)

## VAV-01 SUMMARY

| SPACE NAME | SPACE TYPE | Az [SQ.FT.] | Rp [CFM/ PERSON] | Ra [CMF/SQ.FT.] | PEOPLE DENSITY [#/1000SQ.F... | Pz [PEOPLE] | Vbz [CFM] | Ez | Voz [CFM] | Vpz [CFM] | ZONE Zp |
|---|---|---|---|---|---|---|---|---|---|---|---|
| KITCHEN | F&B - KITCHENS (COOKING) | 360 | - | - | - | - | 0 | 0.8 | 0 | 800 | 0% |

## VAV-02 SUMMARY

| SPACE NAME | SPACE TYPE | Az [SQ.FT.] | Rp [CFM/ PERSON] | Ra [CMF/SQ.FT.] | PEOPLE DENSITY [#/1000SQ.F... | Pz [PEOPLE] | Vbz [CFM] | Ez | Voz [CFM] | Vpz [CFM] | ZONE Zp |
|---|---|---|---|---|---|---|---|---|---|---|---|
| CAFETERIA | F&B - CAFETERIA, FAST FOOD | 2580 | 7.5 | 0.18 | 100 | 190 | 1890 | 0.8 | 2363 | 3500 | 68% |

## VAV-03 SUMMARY

| SPACE NAME | SPACE TYPE | Az [SQ.FT.] | Rp [CFM/ PERSON] | Ra [CMF/SQ.FT.] | PEOPLE DENSITY [#/1000SQ.F... | Pz [PEOPLE] | Vbz [CFM] | Ez | Voz [CFM] | Vpz [CFM] | ZONE Zp |
|---|---|---|---|---|---|---|---|---|---|---|---|
| ART STORAGE | STORAGE - GENERAL STORAGE | 170 | - | 0.12 | - | - | 21 | 0.8 | 27 | 200 | 14% |
| KILN | - | 20 | - | - | - | - | 0 | - | - | 0 | |

## VAV-04 SUMMARY

| SPACE NAME | SPACE TYPE | Az [SQ.FT.] | Rp [CFM/ PERSON] | Ra [CMF/SQ.FT.] | PEOPLE DENSITY [#/1000SQ.F... | Pz [PEOPLE] | Vbz [CFM] | Ez | Voz [CFM] | Vpz [CFM] | ZONE Zp |
|---|---|---|---|---|---|---|---|---|---|---|---|
| ART CLASSROOM | EDUCATION - ART CLASSROOM | 960 | 10 | 0.18 | 20 | 20 | 373 | 0.8 | 467 | 1100 | 42% |

## VAV-05 SUMMARY

| SPACE NAME | SPACE TYPE | Az [SQ.FT.] | Rp [CFM/ PERSON] | Ra [CMF/SQ.FT.] | PEOPLE DENSITY... | Pz [PEOPLE] | Vbz [CFM] | Ez | Voz [CFM] | Vpz [CFM] | ZONE Zp |
|---|---|---|---|---|---|---|---|---|---|---|---|
| MUSIC CLASSROOM | EDUCATION - MUSIC/THEATRE/DANCE | 1020 | 10 | 0.06 | 35 | 36 | 422 | 0.8 | 528 | 1100 | 48% |

## AHU-1 TOTAL SYSTEM SUMMARY

| | |
|---|---|
| SYSTEM Ev | 47% |
| Vot [CFM] | 4600 |

GENERAL NOTES:

| | |
|---|---|
| A: | - |
| B: | - |

Comments

# TERMINAL BOX SCHEDULE

NOTES:
A: RADIATED AND DISCHARGE SOUND LEVELS SHALL NOT EXCEED NC 35 AT 1.5" INLET STATIC PRESSURE WHEN TESTED PER ARI STANDARD 885-98.
B: TOTAL AIR PRESSURE DROP OF TAB AND REHEAT COIL SHALL NOT EXCEED 0.5" CW.
C: WATER PRESSURE DROP OF REHEAT COILS SHALL NOT EXCEED 5 FT. PROVIDE REHEAT COILS SEPARATE FROM BOXES IF REQUIRED TO MEET WATER PRESSURE DROP REQUIREMENTS.

| | | | | | | HEATING COIL (HYDRONIC) | | | | | | | | | | | |
|---|---|---|---|---|---|---|---|---|---|---|---|---|---|---|---|---|---|
| MARK | SERVICE | INLET DIA. (IN.) | COOLING CFM | MIN HEATING CFM | MIN. INLET S.P. @ S.L. (IN. W.C.) | EAT DB (°F) | LAT DB (°F) | SENSIBLE MBH | EWT (°F) | LWT (°F) | GPM | MAX. WATER P.D. (FT.) | MAX. AIR P.D. (IN. WC) | MANUFACTURER & MODEL # | CONTROL TYPE | ACCESSORIES | REMARKS |
| VAV-01 | SERVING | 8 | 600 | 100 | 1.0 | 55 | 85 | 15.5 | 140 | 120 | 1.6 | 2.00 | 0.25 | TITUS DESV | DIGITAL | SPACE MOUNTED THERMOSTAT, CO2 SENSOR | 2-ROW HEATING COIL, DEMAND CONTROLLED VENTILATION |
| VAV-02 | CAFETERIA | 16 | 3500 | 1050 | 1.0 | 55 | 85 | 90.3 | 140 | 120 | 9.4 | 2.00 | 0.25 | TITUS DESV | DIGITAL | SPACE MOUNTED THERMOSTAT, CO2 SENSOR | 2-ROW HEATING COIL, DEMAND CONTROLLED VENTILATION |
| VAV-03 | ART STORAGE | 5 | 200 | 50 | 1.0 | 55 | 85 | 5.1 | 140 | 120 | 0.5 | 2.00 | 0.25 | TITUS DESV | DIGITAL | SPACE MOUNTED THERMOSTAT, CO2 SENSOR | 2-ROW HEATING COIL, DEMAND CONTROLLED VENTILATION |
| VAV-04 | ART ROOM | 12 | 1100 | 330 | 1.0 | 55 | 85 | 28.3 | 140 | 120 | 3.0 | 2.00 | 0.25 | TITUS DESV | DIGITAL | SPACE MOUNTED THERMOSTAT, CO2 SENSOR | 2-ROW HEATING COIL, DEMAND CONTROLLED VENTILATION |
| VAV-05 | MUSIC ROOM | 12 | 1100 | 350 | 1.0 | 55 | 85 | 28.3 | 140 | 120 | 3.0 | 2.00 | 0.25 | TITUS DESV | DIGITAL | SPACE MOUNTED THERMOSTAT, CO2 SENSOR | 2-ROW HEATING COIL, DEMAND CONTROLLED VENTILATION |

# PLUMBING FIXTURE SCHEDULE

| MARK | TYPE | ADA | FINISH | MANUFACTURER* & MODEL # | FAUCET TRIM MFR* & MODEL # | INSTALLATION | REMARKS |
|---|---|---|---|---|---|---|---|
| P1a | PRE-K WATER CLOSET | YES | WHITE/CHROME | AMERICAN STANDARD BABY DEVORO | SLOAN G2 8111-1.6 3250400 | FLOOR MOUNT | PROVIDE FLUSH VALVE WITH MANUAL OVERRIDE. PROVIDE ANTI-MICROBIAL OPEN FRONT SEAT WITH HEAVY DUTY STAINLESS STEEL CHECK HINGE. |
| P1b | WALL-HUNG WATER CLOSET | YES | WHITE/CHROME | AMERICAN STANDARD 2856.111.020 | SLOAN G2 8111-1.6 3250400 | WALL-HUNG | PROVIDE FLUSH VALVE WITH MANUAL OVERRIDE. PROVIDE ANTI-MICROBIAL OPEN FRONT SEAT WITH HEAVY DUTY STAINLESS STEEL CHECK HINGE. PROVIDE CONCEALED ARM WALL CARRIER. |
| P2a | PRE-K LAVATORY | YES | WHITE/CHROME | AMERICAN STANDARD LUCERNE #0356.028 | DELTA 2529LF-HDF | WALL-HUNG | SEE ARCHITECTURAL ELEVATIONS FOR MOUNTING HEIGHT. PROVIDE UNDERCOUNTER PROTECTION, STRAINER, 17 GAUGE P-TRAP, QUARTER TURN ANGLE STOPS AND SUPPLIES.ASSE 1070 COMPLIANT TEMPERING VALVE |
| P2b | WALL-HUNG LAVATORY | YES | WHITE/CHROME | AMERICAN STANDARD LUCERNE #0356.028 | DELTA 2529LF-HDF | WALL-HUNG | PROVIDE UNDERCOUNTER PROTECTION, STRAINER, 17 GAUGE P-TRAP, QUARTER TURN ANGLE STOPS AND SUPPLIES.ASSE 1070 COMPLIANT TEMPERING VALVE |
| P3 | PRE-K UNDERMOUNT KITCHEN SINK DOUBLE BASIN | YES | STAINLESS | DAYTON DCFU31189 | T & S BRASS B-0867-04 | COUNTER MOUNT, OFF CENTER DRAIN | PROVIDE WITH BADGER 5 INSINKERATOR, 1/2 HP. PROVIDE UNDER-COUNTER PROTECTION, STRAINER, 17 GAUGE P-TRAP, QUARTER TURN ANGLE STOPS, SUPPLIES, ASSE 1070 COMPLIANT TEMPERING VALVE. PROVIDE ELKAY DRAIN MODEL #LK18B. |
| P4 | PRE-K DRINKING FOUNTAIN | YES | GRAY | ELKAY LZS8WSLK | - | INTEGRAL BOTTLE FILL | SEE ARCHITECTURAL ELEVATIONS FOR MOUNTING HEIGHT. PROVIDE 17 GAUGE P-TRAP, QUARTER TURN ANGLE STOPS AND SUPPLIES. |
| P5a | DRINKING FOUNTAIN AND BOTTLE FILLER | YES | GRAY | ELKAY LZS8WSLK | - | INTEGRAL BOTTLE FILL | SEE ARCHITECTURAL ELEVATIONS FOR MOUNTING HEIGHT. PROVIDE 17 GAUGE P-TRAP, QUARTER TURN ANGLE STOPS AND SUPPLIES. |
| P5b | DRINKING FOUNTAIN | YES | GRAY | ELKAY EZS8L | - | WALL HUNG | SEE ARCHITECTURAL ELEVATIONS FOR MOUNTING HEIGHT. PROVIDE 17 GAUGE P-TRAP, QUARTER TURN ANGLE STOPS AND SUPPLIES. |
| P6 | PRE-K CLASSROOM SINK | YES | RE: ARCH | CORIAN #859P | DELTA 2529LF-HDF | SOLID SURFACE SINK | PROVIDE UNDER-COUNTER PROTECTION, STRAINER, 17 GAUGE P-TRAP, QUARTER TURN ANGLE STOPS, SUPPLIES, ASSE 1070 COMPLIANT TEMPERING VALVE. PROVIDE ELKAY DRAIN MODEL #LK18B. |
| P7a | ART CLASSROOM SINK DOUBLE BASIN | YES | STAINLESS | GRIFFIN WC.288.00 | T & S BRASS B-0290 | STAND ALONE | PROVIDE UNDER-COUNTER ZURN PLASTER TRAP, UNDER-COUNTER PROTECTION, STRAINER, 17 GAUGE P-TRAP, QUARTER TURN ANGLE STOPS AND SUPPLIES. |
| P7b | ART CLASSROOM SINK SINGLE BASIN | YES | STAINLESS | GRIFFIN LT.118.228 | T & S BRASS B-0290 | STAND ALONE | PROVIDE UNDER-COUNTER ZURN PLASTER TRAP, UNDER-COUNTER PROTECTION, STRAINER, 17 GAUGE P-TRAP, QUARTER TURN ANGLE STOPS AND SUPPLIES. |
| P8 | HAND WASH TROUGH | YES | RE: ARCH | BRADLEY ELX-2 | KOHLER K-13462, QTY. 2 | SOLID SURFACE SINK | PROVIDE UNDER-COUNTER ZURN PLASTER TRAP, UNDER-COUNTER PROTECTION, STRAINER, 17 GAUGE P-TRAP, QUARTER TURN ANGLE STOPS AND SUPPLIES. |
| P9 | MOP SINK BASIN | N/A | TERRAZO | FLORESTONE 92 36X36 | T & S BRASS B-0665-BSTP | FLOOR MOUNT, 36"X36" DROP FRONT MOP RECEPTOR | PROVIDED WITH STAINLESS STEEL PROTECTIVE CAP TO BE CAST INTEGRAL. DRAIN BODY SHALL BE BRASS CAST INTEGRAL AND SHALL PROVIDE FOR A NO CAULK CONNECTION, 3" DRAIN SIZE. PROVIDE VACUUM BREAKER, HOSE, HOSE BRACKET, MOP HANGER, BASIN GUARDS AND WALL GUARDS. |
| P10 | PENTHOUSE ROOF DRAIN | N/A | CAST IRON | ZURN Z121 | - | FLUSH GRATE (FG) | 12" RIMARY ROOF DRAIN ROUTED TO BUILDING SANITARY SYSTEM |
| P11 | ROOF DRAIN | N/A | DURA-COATED CAST IRON | ZURN Z121 | - | - | 12" PRIMARY DRAIN |
| P12 | WATER CLOSET FLUSH VALVE ONLY | EXISTING | CHROME | - | SLOAN G2 8111-1.6 3250400 | - | EXISTING FWATER CLOSET TO REMAIN. REPLACE FLUSH VALVE ONLY |
| P13 | URINAL FLUSH VALVE ONLY | EXISTING | CHROME | | SLOAN G2 8111-1.6 3250400 | - | EXISTING URINAL TO REMAIN. REPACE FLUSH VALVE ONLY |
| P14 | LAVATORY FAUCET ONLY | EXISTING | CHROME | - | DELTA 2529LF-HDF | - | EXISTING SINK AND DRAIN TO REMAIN. REPLACE FAUCET ONLY |

# EXHAUST FAN SCHEDULE

NOTES:
A: PROVIDE DIRECT DRIVE FANS WITH FAN SPEED CONTROL.
B: NO EQUIPMENT SHALL BE SELECTED ABOVE 90% OF MOTOR NAMEPLATE RATING.
C: PROVIDE ROOF CURB WITH INTEGRAL DAMPER.

| | | | FAN | | | | MOTOR | | | | | |
|---|---|---|---|---|---|---|---|---|---|---|---|---|
| | | | | | ESP | | | | | | | |
| MARK | SERVICE | TYPE | CFM | SONES | @ SL (IN WC) | @ ALT (IN WC) | HP (W) | VOLT | PHASE | MANUFACTURER & MODEL # | ACCESSORIES | REMARKS |
| EF-1 | ART CLASSROOM | INLINE | 800 | 3.8 | 0.60 | 0.50 | (260) | 120 | 1 | GREENHECK CSP-A1750 | INTEGRAL BACKDRAFT DAMPER | - |
| EF-2 | PRE-K BATHROOMS AND KITCHEN | INLINE | 300 | 5.7 | 0.60 | 0.50 | (103) | 120 | 1 | GREENHECK CSP-A390 | INTEGRAL BACKDRAFT DAMPER | - |
| EF-3 | KILN ROOM GENERAL EXHAUST | CEILING | 400 | 1.5 | 0.24 | 0.20 | (101) | 120 | 1 | GREENHECK CSP-A510 | INTEGRAL BACKDRAFT DAMPER | - |
| EF-4 | SPED BATHROOM EXH | CEILING | 80 | 0.4 | 0.17 | 0.15 | (13) | 120 | 1 | GREENHECK SP-A90 | INTEGRAL BACKDRAFT DAMPER | - |
| KEF-1 | TYPE II KITCHEN HOOD | ROOF-MOUNTED UPBLAST | 1648 | 9.2 | 1.20 | 1.00 | 3/4 | 208 | 1 | GREENHECK CUBE-141 | 24" ROOF CURB, INTEGRAL BACKDRAFT DAMPER | - |
| KEF-2 | TYPE II DISHWASH HOOD | ROOF-MOUNTED UPBLAST | 675 | 7.4 | 0.60 | 0.50 | 1/4 | 120 | 1 | GREENHECK CUBE-099 | 24" ROOF CURB, INTEGRAL BACKDRAFT DAMPER | - |

# AIR COOLED CONDENSING UNIT SCHEDULE

NOTES:
A: SOUND POWER REQUIREMENTS ARE BASED ON ARI STANDARD CONDITIONS.

| | | | | | ELECTRICAL | | | | | | | |
|---|---|---|---|---|---|---|---|---|---|---|---|---|
| MARK | MATCHED SYSTEM COMPONENT | DUTY CAPACITY (TONS) | EER | REFRIGERANT | VOLT | PHASE | MCA | MOCP (A) | OPER. WEIGHT (LBS) | MANUFACTURER & MODEL # | ACCESSORIES | REMARKS |
| CU-1 | AHU-1 | 15 | 13.4 | 410A | 208 | 3 | 65.6 | 90 | 731 | CARRIER 39AUD | HOT GAS BYPASS, LOW AB=MBIENT CONTROL | - |

# GRILLE, REGISTER, DIFFUSER & LOUVER SCHEDULE

| MARK | USE | PATTERN | FINISH | MANUFACTURER* & MODEL# | ACCESSORIES | REMARKS |
|---|---|---|---|---|---|---|
| - | - | - | - | - | - | - |
| A | LAY-IN CEILING SUPPLY | 4-WAY, 3-WAY | WHITE | TITUS TDC-AA | LAY-IN CEILING MODULE | ROUND NECK |
| B | | | | | | |
| C | LAY-IN CEILING RETURN | EGG CRATE | WHITE | TITUS 50F | LAY-IN CEILING MODULE | RECTANGULAR NECK |
| D | SIDEWALL RETURN/TRANSFER | LOUVERED | WHITE | TITUS 350RL | - | - |
| E | EXTERIOR LOUVER | STATIONARY LOUVER | MATCH EXISTING | RUSKIN ELF675 | - | - |
| F | LAY-IN CEILING EXHAUST | EGG CRATE | WHITE | TITUS 50F | LAY-IN CEILING MODULE | ROUND NECK |

NOTES:

RCRBD Record Set
T.A.
05/14/2020

1. ALL STARTERS FOR MECHANICAL EQUIPMENT SHALL BE FURNISHED UNDER THIS CONTRACT AND SET IN PLACE AND WIRED BY EC. VFD'S NOT INCLUDED AS PART OF THE EQUIPMENT WIRING PACKAGE SHALL BE FURNISHED BY THE MC, AND SET IN PLACE AND WIRED BY THE EC, U.N.O.

2. NOT ALL EQUIPMENT REQUIRED UNDER THIS CONTRACT IS NECESSARILY SPECIFIED ON THE SCHEDULE SHEETS. PLAN & DIAGRAM NOTATIONS AND PROJECT MANUAL CONTAIN EQUIPMENT SPECIFICATIONS AS WELL.

3. (ASHRAE 90.1-2004 & 2007) MECHANICAL EQUIPMENT THAT IS NOT COVERED BY THE U.S. NATIONAL APPLIANCE ENERGY CONSERVATION ACT (NAECA) OF 1987 SHALL CARRY A PERMANENT LABEL INSTALLED BY THE MANUFACTURER STATING THAT THE EQUIPMENT COMPLIES WITH THE REQUIREMENTS OF STANDARD 90.1.

4. (ASHRAE 62.1) ALL AIR MOVING EQUIPMENT SUBJECT TO THE SCOPE OF ASHRAE 62.1 AND SHALL COMPLY WITH CONSTRUCTION REQ'MTS THEREIN.

5. NOT ALL CAPACITIES, CHARACTERISTICS, AND CONSTRUCTION FEATURES REQUIRED ARE NECESSARILY INDICATED IN THE EQUIPMENT SCHEDULES. RE: PLANS AND SPECIFICATIONS FOR ADDITIONAL REQ'MTS.

6. CAPACITIES, CHARACTERISTICS, AND CONSTRUCTION FEATURES OF THE SCHEDULED EQUIPMENT ARE HEREBY INCORPORATED INTO THE PROJECT REQUIREMENTS. EQUIVALENT PRODUCTS PERFORMANCE AND CONSTRUCTION FEATURES SHALL MEET OR EXCEED THAT OF THE SPECIFIED EQUIPMENT WHETHER SCHEDULED OR NOT.

7. NOT ALL EQUIPMENT AVAILABLE FROM LISTED "EQUIVALENT" MANUFACTURERS LISTED IS NECESSARILY EQUIVALENT TO THE BASIS OF DESIGN EQUIPMENT SPECIFIED. CONTRACTOR SHALL BE SOLELY RESPONSIBLE FOR ANY COSTS, RESULTANT CHANGES TO OTHER DIVISIONS, AND SPATIAL REQ'MTS FOR EQUIPMENT OTHER THAN SCHEDULED.

8. ALL MANUFACTURERS REPRESENTATIVES SHALL READ AND UNDERSTAND THE CONTROL DIAGRAMS AND COORDINATE WITH TCC TO PROVIDE A FULLY FUNCTIONING SYSTEM AS DESCRIBED IN THE CONTROL DIAGRAMS.

TAB
Associates
*The Architectural Balance*
0056 Edwards Village Blvd.
Suite 210
Edwards, CO 8132
(970) 766-1470
fax: (970) 766-1471
email: tab@vail.net
www.tabassociates.com

COLORADO REGISTERED
DAVID A. LYLE
34668
4/6/2020
PROFESSIONAL ENGINEER

**STRAWBERRY PARK ELEMENTARY**
**39620 AMETHYST DRIVE**
**Steamboat Springs, CO**

Revisions:

| No | Description | Date |
|---|---|---|
| | | |

Issue Dates:
PERMIT SET
04.06.2020

Sheet Title:
MECHANICAL SCHEDULES

BG BUILDINGWORKS
systems fulfilled
303.278.3820 www.bgbuildingworks.com
Project No. 10182.00
Copyright 2020
ALBUQUERQUE | AVON | DENVER | FORT COLLINS

Project No:
10182.00

Sheet No:
M0.1

LEGEND:

EXISTING SNOWMELT

NEW SNOWMELT

SCOPE TO BE PRICED SEPARATELY FOR COMPLETION AT A LATER DATE

RCRBD Record Set
05/14/2020

REFER TO CIVIL AND LANDSCAPE DOCUMENTS FOR DETAILS AND EXTENTS OF SNOWMELTED AREAS

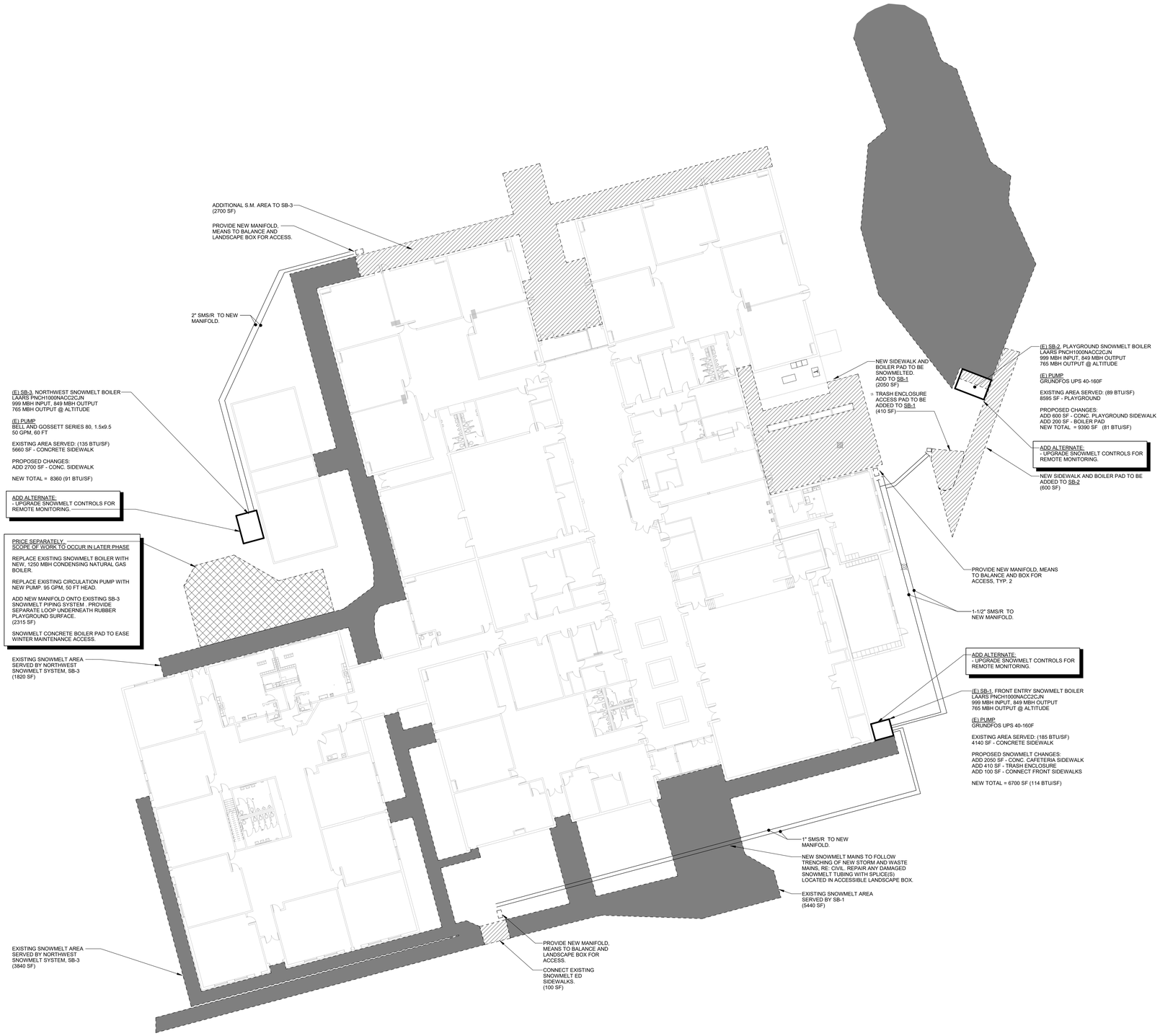


1 MECHANICAL SNOWMELT PLAN
SCALE: 1" = 20'-0"


TAB Associates
*The Architectural Balance*
0056 Edwards Village Blvd.
Suite 210
Edwards, CO 8132
(970) 766-1470
fax: (970) 766-1471
email: tab@vail.net
www.tabassociates.com

# STRAWBERRY PARK ELEMENTARY
## 39620 AMETHYST DRIVE
Steamboat Springs, CO

| Revisions: | | |
|---|---|---|
| No | Description | Date |
| | | |

Issue Dates:
PERMIT SET
04.06.2020

Sheet Title:
SNOWMELT PLAN

Project No:
10182.00

Sheet No:
M1.1


BG BUILDINGWORKS
systems fulfilled
303.278.3820 www.bgbuildingworks.com
Project No. 10182.00

Copyright 2020
ALBUQUERQUE | AVON | DENVER | FORT COLLINS

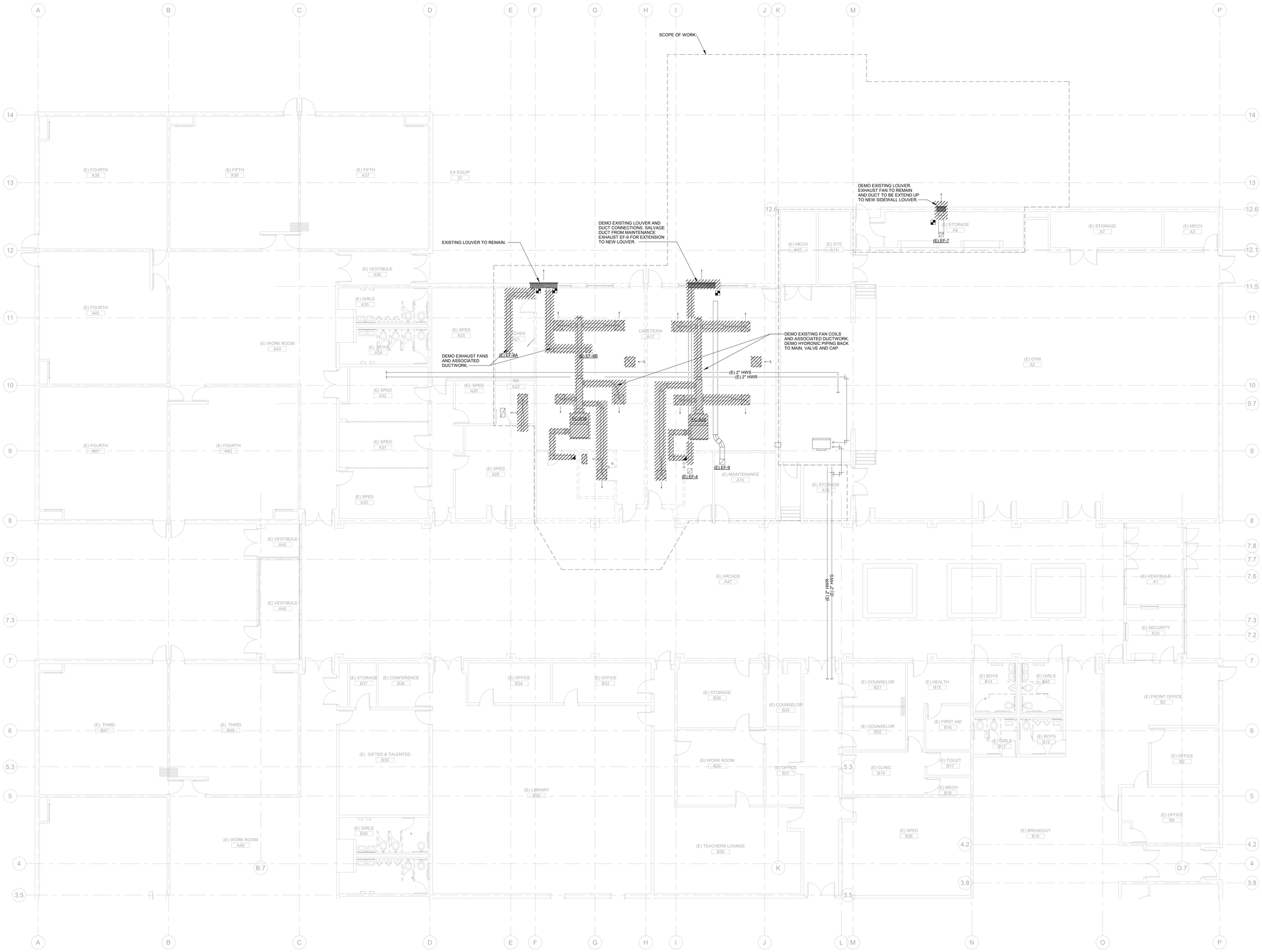


1 MAIN LEVEL AREA A DEMO MECHANICAL PLAN
SCALE: 1/8" = 1'-0"

## DEMOLITION NOTES:

1. [illegible] WASTE AND VENT PIPING MAY BE ROUTED IN SPACE THAT IS NOT REPRESENTED, BUT IS TO REMAIN. OTHER SYSTEMS MAY EXIST WITHIN SPACE THAT IS NOT REPRESENTED ON THESE DRAWINGS; MODIFICATIONS TO THESE SYSTEMS ARE NOT ANTICIPATED.

2. FIELD VERIFY ALL COMPONENTS PRIOR TO DEMOLITION. THE INFORMATION ON THIS SHEET WAS OBTAINED, IN PART, FROM HISTORIC DESIGN DRAWINGS. ONLY PORTIONS OF THIS MAY BE ACCURATE. ADDITIONAL CONFIRMATION DURING DESIGN PROCESS.

3. PROVIDE PRELIMINARY TESTING OF EXISTING HYDRONIC SYSTEMS. MEASURE CURRENT FLUID FLOW RATE THROUGH ALL EXISTING COILS, RADIANT, AND SNOWMELT ZONES FOR THE CURRENTLY INSTALLED SYSTEMS. SUBMIT REPORT OF MEASURED VALUES TO ENGINEER FOR REVIEW AND CONFIRMATION OF SYSTEM DESIGN ASSUMPTIONS PRIOR TO DEMOLITION.

4. PROVIDE PRELIMINARY TESTING OF EXISTING HVAC DUCTWORK SYSTEMS. MEASURE CURRENT AIR FLOW RATES AT ALL EXISTING SUPPLY, RETURN, AND EXHAUST REGISTERS. MEASURE TOTAL AIR FLOWS AT MAIN DUCT BRANCHES AND ALL FAN SYSTEMS. SUBMIT REPORT OF MEASURED VALUES TO ENGINEER FOR REVIEW AND CONFIRMATION OF SYSTEM DESIGN ASSUMPTIONS PRIOR TO DEMOLITION.

5. (E) WASTE SYSTEM SERVING SPACE IS LOCATED IN THE CEILING OF THE SPACE BELOW.

6. REMOVE ALL MECHANICAL ITEMS INDICATED.

7. TEMPORARILY SEAL OR CAP PIPING TO BE RE-USED FOR LATER CONNECTION.

8. NOTIFY ENGINEER IMMEDIATELY OF ANY DISCREPANCIES OF INFORMATION REPRESENTED IN THE DOCUMENTS VERSUS WHAT IS FOUND IN THE FIELD.

9. COORDINATE PATCHING AND REPAIRS OF WALLS, CEILINGS AND FLOORS WITH ARCHITECT.

10. PATCH STRUCTURAL OPENINGS IN FLOORS, WALLS AND ROOFS THAT WERE PREVIOUSLY OCCUPIED BY SYSTEMS AND EQUIPMENT DEMOLISHED UNDER THIS CONTRACT IN ACCORDANCE WITH STRUCTURAL ENGINEER'S REQUIREMENTS.

RCHBD-R6600R-SBE
T.A.
05/14/2020

TAB Associates
*The Architectural Balance*
0056 Edwards Village Blvd.
Suite 210
Edwards, CO 81632
(970) 766-1470
fax: (970) 766-1471
email: tab@vail.net
www.tabassociates.com

COLORADO REGISTERED ARCHITECT
JOHN P. TAYLOR
34688

# STRAWBERRY PARK ELEMENTARY
# 39620 AMETHYST DRIVE
## Steamboat Springs, CO

| Revisions: | | |
|---|---|---|
| No | Description | Date |
| | | |

Issue Dates:
PERMIT SET
04.06.2020

Sheet Title:
MAIN LEVEL AREA A DEMO MECHANICAL PLAN

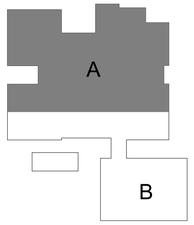


KEY PLAN

BG BUILDINGWORKS
systems fulfilled
303.278.3820 www.bgbuildingworks.com
Project No. 10182.00 Copyright 2020
ALBUQUERQUE | AVON | DENVER | FORT COLLINS

Project No:
10182.00

Sheet No:
MD2.1

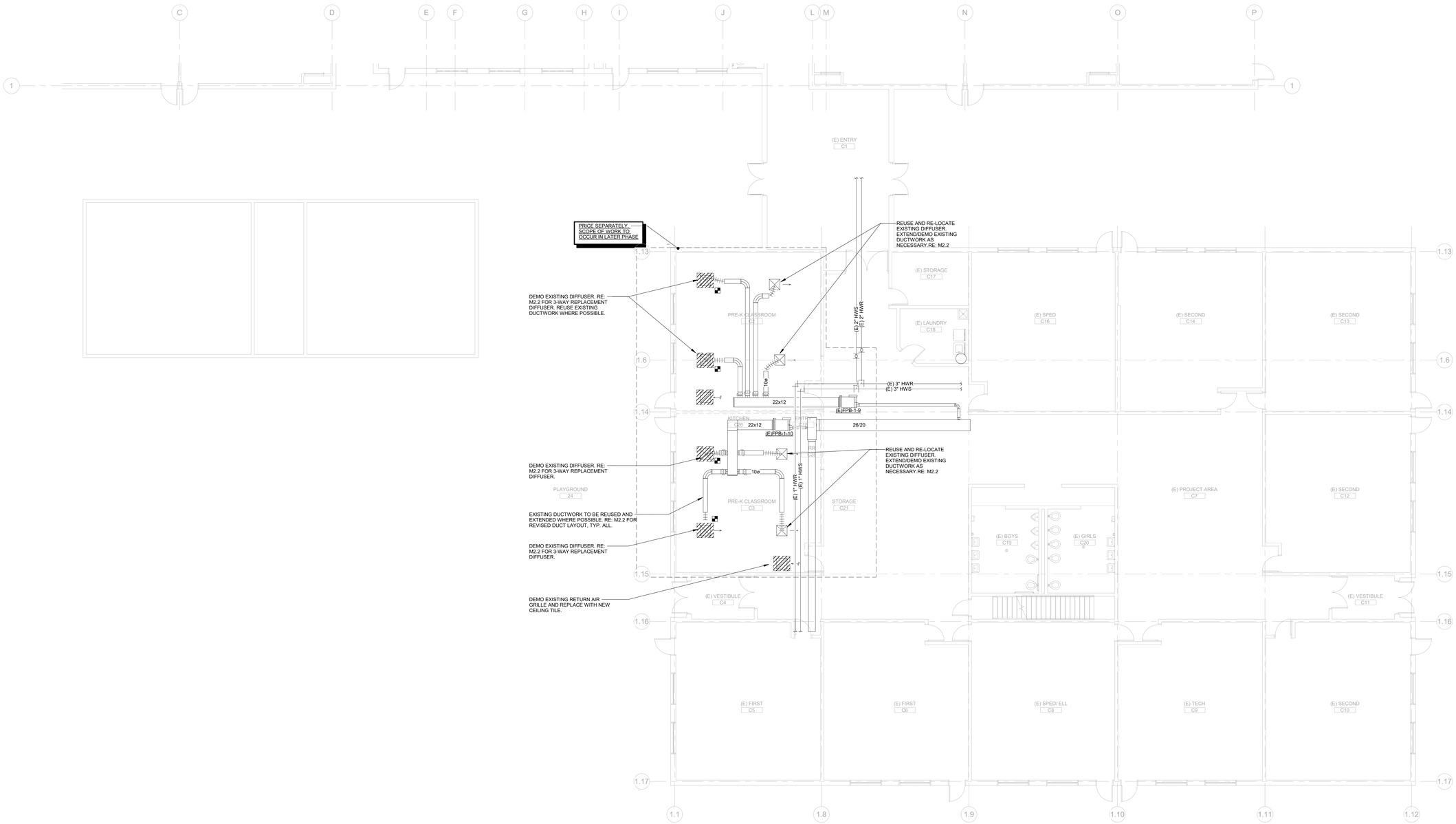


1 PRE-K PLAN AREA B DEMO MECHANICAL PLAN
SCALE: 1/8" = 1'-0"

## DEMOLITION NOTES:

1. ADDITIONAL DEMOLITION WORK MAY BE REQUIRED. WASTE AND VENT PIPING MAY BE ROUTED IN SPACE THAT IS NOT REPRESENTED, BUT IS TO REMAIN. OTHER SYSTEMS MAY EXIST WITHIN SPACE THAT IS NOT REPRESENTED IN THESE DRAWINGS; MODIFICATIONS TO THESE SYSTEMS ARE NOT ANTICIPATED.

2. FIELD VERIFY ALL COMPONENTS PRIOR TO DEMOLITION. THE INFORMATION ON THIS SHEET WAS OBTAINED, IN PART, FROM HISTORIC DESIGN DRAWINGS. ONLY PORTIONS OF THIS MAY BE ACCURATE. ADDITIONAL CONFIRMATION DURING DESIGN PROCESS.

3. PROVIDE PRELIMINARY TESTING OF EXISTING HYDRONIC SYSTEMS. MEASURE CURRENT FLUID FLOW RATE THROUGH ALL EXISTING COILS, RADIANT, AND SNOWMELT ZONES FOR THE CURRENTLY INSTALLED SYSTEMS. SUBMIT REPORT OF MEASURED VALUES TO ENGINEER FOR REVIEW AND CONFIRMATION OF SYSTEM DESIGN ASSUMPTIONS PRIOR TO DEMOLITION.

4. PROVIDE PRELIMINARY TESTING OF EXISTING HVAC DUCTWORK SYSTEMS. MEASURE CURRENT AIR FLOW RATES AT ALL EXISTING SUPPLY, RETURN, AND EXHAUST REGISTERS. MEASURE TOTAL AIR FLOWS AT MAIN DUCT BRANCHES AND ALL FAN SYSTEMS. SUBMIT REPORT OF MEASURED VALUES TO ENGINEER FOR REVIEW AND CONFIRMATION OF SYSTEM DESIGN ASSUMPTIONS PRIOR TO DEMOLITION.

5. (E) WASTE SYSTEM SERVING SPACE IS LOCATED IN THE CEILING OF THE SPACE BELOW.

6. REMOVE ALL MECHANICAL ITEMS INDICATED.

7. TEMPORARILY SEAL OR CAP PIPING TO BE RE-USED FOR LATER CONNECTION.

8. NOTIFY ENGINEER IMMEDIATELY OF ANY DISCREPANCIES OF INFORMATION REPRESENTED IN THE DOCUMENTS VERSUS WHAT IS FOUND IN THE FIELD.

9. COORDINATE PATCHING AND REPAIRS OF WALLS, CEILINGS AND FLOORS WITH ARCHITECT.

10. PATCH STRUCTURAL OPENINGS IN FLOORS, WALLS AND ROOFS THAT WERE PREVIOUSLY OCCUPIED BY SYSTEMS AND EQUIPMENT DEMOLISHED UNDER THIS CONTRACT IN ACCORDANCE WITH STRUCTURAL ENGINEER'S REQUIREMENTS.

RC:BBD-R6600-R5-B1
T.A.
05/01/2020

TAB Associates
*The Architectural Balance*
0056 Edwards Village Blvd.
Suite 210
Edwards, CO 81632
(970) 766-1470
fax: (970) 766-1471
email: tab@vail.net
www.tabassociates.com

# STRAWBERRY PARK ELEMENTARY
## 39620 AMETHYST DRIVE
### Steamboat Springs, CO

**Revisions:**

| No | Description | Date |
|---|---|---|
| | | |

**Issue Dates:**
PERMIT SET
04.06.2020

**Sheet Title:**
PRE-K PLAN AREA B DEMO MECHANICAL PLAN

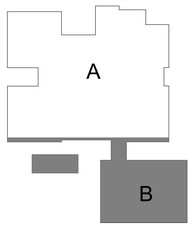


KEY PLAN

BG BUILDINGWORKS
systems fulfilled
303.278.3820 www.bgbuildingworks.com
Project No. 10182.00
Copyright 2020
ALBUQUERQUE | AVON | DENVER | FORT COLLINS

**Project No:**
10182.00

**Sheet No:**
MD2.2

RCRBD Record Set
T.A.

05/14/2020

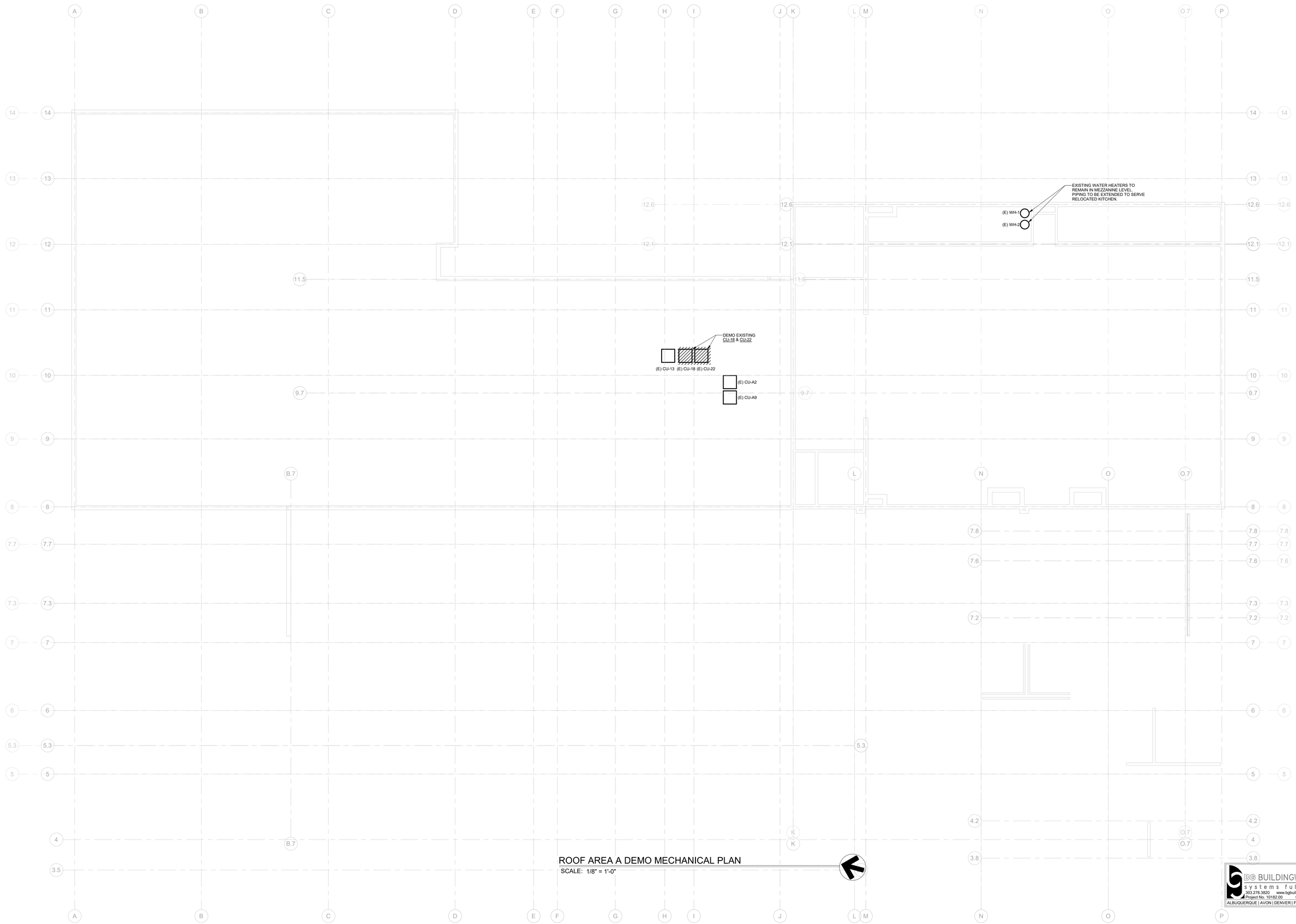


ROOF AREA A DEMO MECHANICAL PLAN
SCALE: 1/8" = 1'-0"


TAB Associates
*The Architectural Balance*
0056 Edwards Village Blvd.
Suite 210
Edwards, CO 8152
(970) 766-1470
fax: (970) 766-1471
email: tab@vail.net
www.tabassociates.com

# STRAWBERRY PARK ELEMENTARY
## 39620 AMETHYST DRIVE
Steamboat Springs, CO

Revisions:

| No | Description | Date |
|---|---|---|
| | | |

Issue Dates:
PERMIT SET
04.06.2020

Sheet Title:
ROOF AREA A DEMO MECHANICAL PLAN

Project No:
10182.00

Sheet No:
MD3.1


BG BUILDINGWORKS
systems fulfilled
303.278.3820 www.bgbuildingworks.com
Project No. 10182.00

Copyright 2020
ALBUQUERQUE | AVON | DENVER | FORT COLLINS

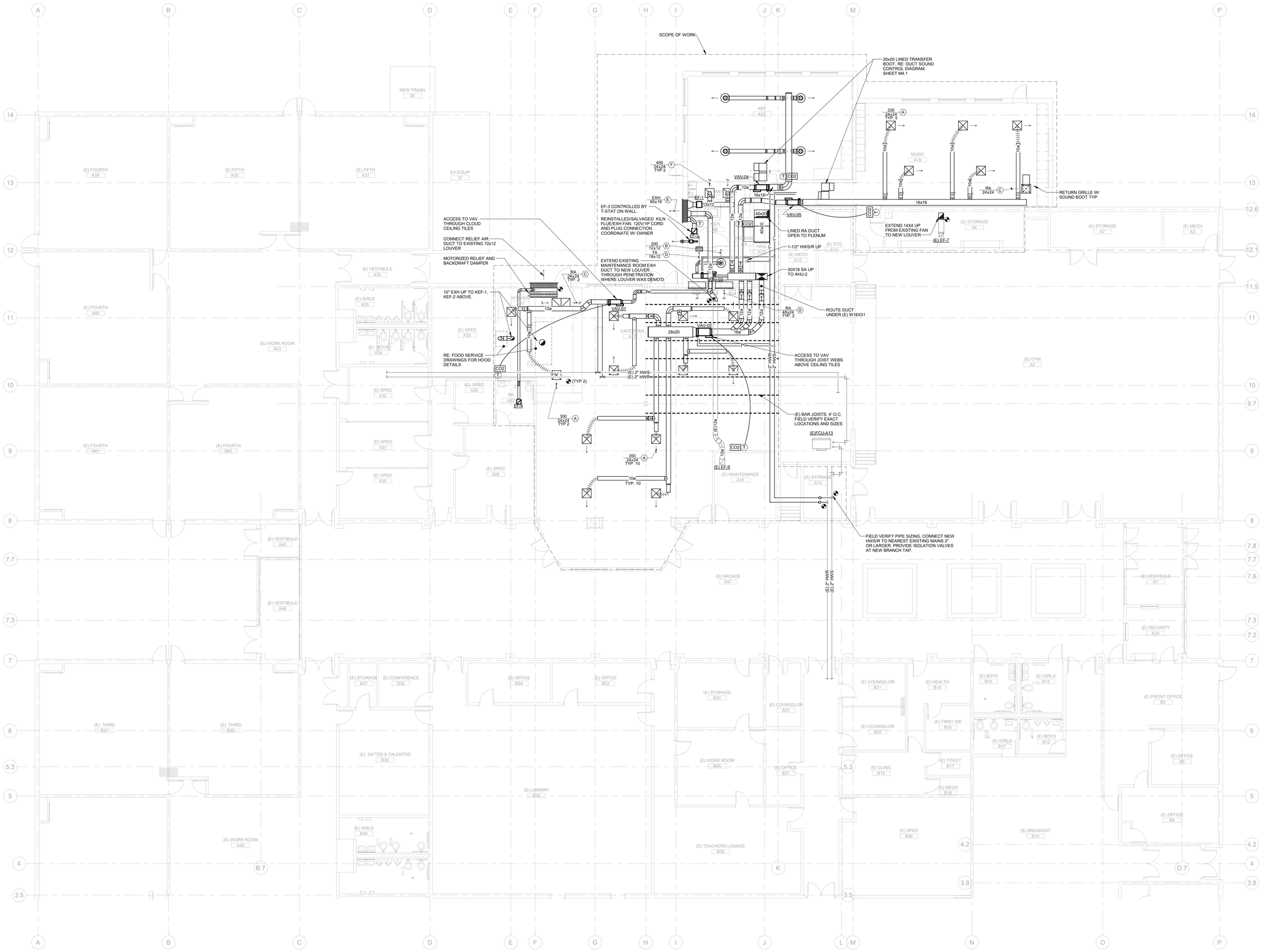


1 MAIN LEVEL AREA A MECHANICAL PLAN

SCALE: 1/8" = 1'-0"

## NOTES:

1. THE INFO SHOWN FOR MECHANICAL DIAGRAMS.
2. COORDINATE ROUTING OF CONDENSATE DRAIN LINES WITH ARCHITECT PRIOR TO INSTALLATION.
3. CEILING COORDINATION OF ALL MEP SYSTEMS (LIGHTING, DUCTWORK, DIFFUSERS, ELECTRICAL, FIRE PROTECTION, ETC.) MUST BE COMPLETED BY THE CONTRACTOR PRIOR TO THE START OF ANY INSTALLATIONS.
4. DO NOT INSTALL DUCTWORK OVER ELECTRICAL, ACCESS ELECTRICAL PANELS; MAINTAIN N.E.C. CLEARANCES. COORDINATE ROUTING WITH ELECTRICIAN.
5. CONTRACTOR TO MAINTAIN 8'-4" CLEAR HEAD HEIGHT IN GARAGE AND INFORM THE ENGINEER AND ARCHITECT OF ANY AREAS THAT MAY NOT MEET 8'-4" PRIOR TO INSTALLATION, MINIMUM 8'-2" CLEAR HEAD HEIGHT MUST BE MAINTAINED IN ACCESSIBLE VAN AREAS.
6. PROVIDE FLEXIBLE DUCT AND PIPE CONNECTIONS TO ALL MOTORIZED EQUIPMENT.
7. VERIFY ALL EQUIPMENT ACCESS PANELS WITH MANUFACTURER AND ARCHITECT.
8. PROTECT PIPING ROUTED ALONG COLUMNS, WALLS, ETC. FROM DAMAGE AS NECESSARY WITH CAGES. COORDINATE WITH ARCHITECT.
9. PEX PIPING SHALL NOT BE ALLOWED TO PENETRATE FIRE BARRIERS WHERE FIRE CAULKING IS REQUIRED.
10. THE SPACE ABOVE CEILING IS BEING UTILIZED AS A RETURN AIR PLENUM. ALL RETURN GRILLES SHALL BE PROVIDED WITH SOUND BOOTS AND A DIRECT PATH TO THE AIR HANDLING SYSTEM RETURN DUCT, OPEN TO PLENUM. WHERE FULL HEIGHT WALLS ARE INSTALLED AND THE RETURN AIR PATH IS COMPROMISED, THE SOUND BOOT SHALL EXTEND THROUGH THE WALL OR TRANSFER AIR DUCTS SHALL BE PROVIDED. OTHERWISE, PROVIDE Z- OR U- DUCT TRANSFER THROUGH WALL. TRANSFER DUCTS AND SOUND BOOTS SHALL BE LINED SHEET METAL. NON-METAL DUCT NOT PERMITTED.
11. T-STATS (AND CO2 SENSORS) SHALL BE LOCATED NEAR THE LIGHT SWITCH U.N.O. WITHIN THE ROOM SHOWN. COORDINATE WITH ARCHITECT & ELECTRICAL ENGINEER TO MATCH HEIGHT AND LOCATION.
12. ALL DUCTWORK SHALL BE ROUTED AS HIGH AS POSSIBLE IN THE CEILING SPACE. UTILIZE JOIST SPACE WHEN POSSIBLE, ESPECIALLY WHERE CROSSING OTHER DUCTS, PIPES, AND ELECTRICAL.
13. ACCESS PANELS SHALL BE 24x24, U.N.O. LOCATIONS SHOWN ARE APPROXIMATE. EXACT LOCATIONS SHALL BE COORDINATED WITH THE ARCHITECTS DRAWINGS AND WITH THE LOCATIONS OF THE EQUIPMENT OR APPARATUS THAT THEY SERVE.
14. SEAL ALL DUCT PENETRATIONS OF ACOUSTIC PARTITIONS.
15. MAINTAIN MIN. 3 FT BETWEEN ENVIRONMENTAL EXH TERMINATIONS AND OPENINGS INTO BUILDING.

**Issued for Record Set**

05/14/2020


TAB Associates
*The Architectural Balance*
0056 Edwards Village Blvd.
Suite 210
Edwards, CO 81632
(970) 766-1470
fax: (970) 766-1471
email: tab@vail.net
www.tabassociates.com


# STRAWBERRY PARK ELEMENTARY
## 39620 AMETHYST DRIVE
### Steamboat Springs, CO

**Revisions:**

| No | Description | Date |
|---|---|---|
| | | |

**Issue Dates:**
PERMIT SET
04.06.2020

**Sheet Title:**
MAIN LEVEL AREA A MECHANICAL PLAN

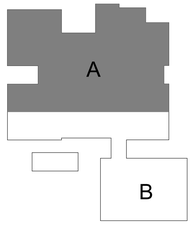


KEY PLAN


BG BUILDINGWORKS
systems fulfilled
303.278.3820 www.bgbuildingworks.com
Project No. 10182.00 Copyright 2020
ALBUQUERQUE | AVON | DENVER | FORT COLLINS


**Project No:** 10182.00

**Sheet No:** M2.1

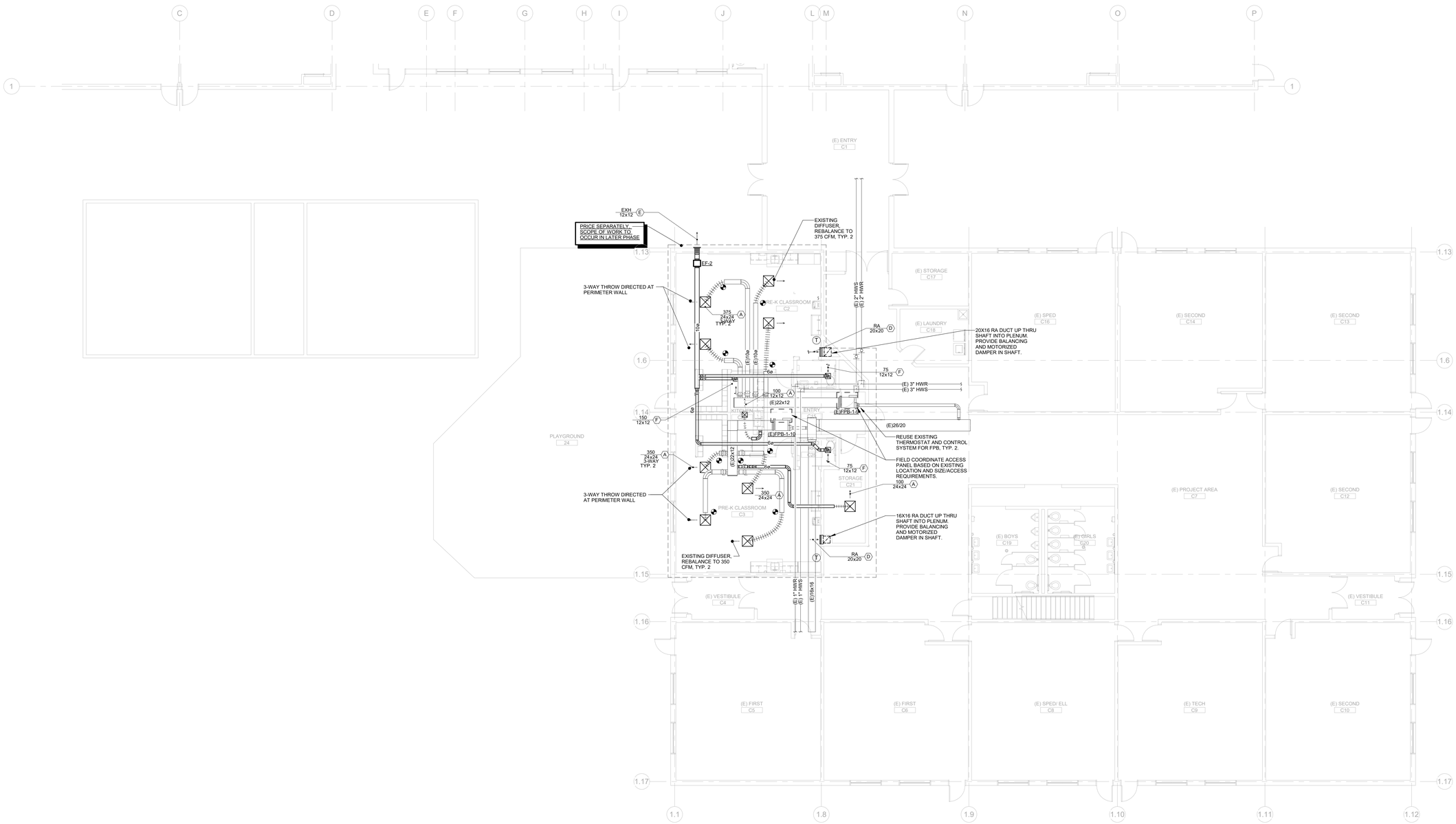


1 PRE-K PLAN AREA B MECHANICAL PLAN
SCALE: 1/8" = 1'-0"

## NOTES:

1. THE INFO SHOWN ON MECHANICAL DRAWINGS IS DIAGRAMMATIC.
2. COORDINATE ROUTING OF CONDENSATE DRAINS WITH ARCHITECT PRIOR TO INSTALLATION.
3. CEILING COORDINATION OF ALL MEP SYSTEMS (LIGHTING, DUCTWORK, DIFFUSERS, ELECTRICAL, FIRE PROTECTION, ETC.) MUST BE COMPLETED BY THE CONTRACTOR PRIOR TO THE START OF ANY INSTALLATIONS.
4. DO NOT INSTALL DUCTWORK OVER ELECTRICAL ACCESSIBLE ELECTRICAL PANELS; MAINTAIN N.E.C. CLEARANCES. COORDINATE ROUTINGS WITH ELECTRICIAN.
5. CONTRACTOR TO MAINTAIN 8'-4" CLEAR HEAD HEIGHT IN GARAGE AND INFORM THE ENGINEER AND ARCHITECT OF ANY AREAS THAT MAY NOT MEET 8'-4" PRIOR TO INSTALLATION. MINIMUM 8'-2" CLEAR HEAD HEIGHT MUST BE MAINTAINED IN ACCESSIBLE VAN AREAS.
6. PROVIDE FLEXIBLE DUCT AND PIPE CONNECTIONS TO ALL MOTORIZED EQUIPMENT.
7. VERIFY ALL EQUIPMENT ACCESS PANELS WITH MANUFACTURER AND ARCHITECT.
8. PROTECT PIPING ROUTED ALONG COLUMNS, WALLS, ETC. FROM DAMAGE AS NECESSARY WITH CAGES. COORDINATE WITH ARCHITECT.
9. PEX PIPING SHALL NOT BE ALLOWED TO PENETRATE FIRE BARRIERS WHERE FIRE CAULKING IS REQUIRED.
10. THE SPACE ABOVE CEILING IS BEING UTILIZED AS A RETURN AIR PLENUM. ALL RETURN GRILLES SHALL BE PROVIDED WITH SOUND BOOTS AND A DIRECT PATH TO THE AIR HANDLING SYSTEM RETURN DUCT, OPEN TO PLENUM. WHERE FULL HEIGHT WALLS ARE INSTALLED AND THE RETURN AIR PATH IS COMPROMISED, THE SOUND BOOT SHALL EXTEND THROUGH THE WALL OR TRANSFER AIR DUCTS SHALL BE PROVIDED. OTHERWISE, PROVIDE Z- OR U- DUCT TRANSFER THROUGH WALL. TRANSFER DUCTS AND SOUND BOOTS SHALL BE LINED SHEET METAL. NON-METAL DUCT NOT PERMITTED.
11. T-STATS (AND CO2 SENSORS) SHALL BE LOCATED NEAR THE LIGHT SWITCH U.N.O. WITHIN THE ROOM SHOWN. COORDINATE WITH ARCHITECT & ELECTRICAL ENGINEER TO MATCH HEIGHT AND LOCATION.
12. ALL DUCTWORK SHALL BE ROUTED AS HIGH AS POSSIBLE IN THE CEILING SPACE. UTILIZE JOIST SPACE WHEN POSSIBLE, ESPECIALLY WHERE CROSSING OTHER DUCTS, PIPES, AND ELECTRICAL.
13. ACCESS PANELS SHALL BE 24x24, U.N.O. LOCATIONS SHOWN ARE APPROXIMATE. EXACT LOCATIONS SHALL BE COORDINATED WITH THE ARCHITECTS DRAWINGS AND WITH THE LOCATIONS OF THE EQUIPMENT OR APPARATUS THAT THEY SERVE.
14. SEAL ALL DUCT PENETRATIONS OF ACOUSTIC PARTITIONS.
15. MAINTAIN MIN. 3 FT BETWEEN ENVIRONMENTAL EXH TERMINATIONS AND OPENINGS INTO BUILDING.

RGKBB Record Set
05/14/2020

TAB Associates
*The Architectural Balance*
0056 Edwards Village Blvd.
Suite 210
Edwards, CO 81632
(970) 766-1470
fax: (970) 766-1471
email: tab@vail.net
www.tabassociates.com

# STRAWBERRY PARK ELEMENTARY
# 39620 AMETHYST DRIVE
Steamboat Springs, CO

| Revisions: | | |
|---|---|---|
| No | Description | Date |
| | | |

Issue Dates:
PERMIT SET
04.06.2020

Sheet Title:
PRE-K PLAN AREA B MECHANICAL PLAN

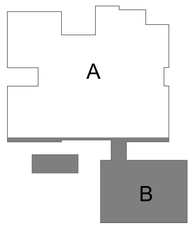


KEY PLAN

Project No:
10182.00

Sheet No:
M2.2

BG BUILDINGWORKS
systems fulfilled
303.278.3820 www.bgbuildingworks.com
Project No. 10182.00
Copyright 2020
ALBUQUERQUE | AVON | DENVER | FORT COLLINS

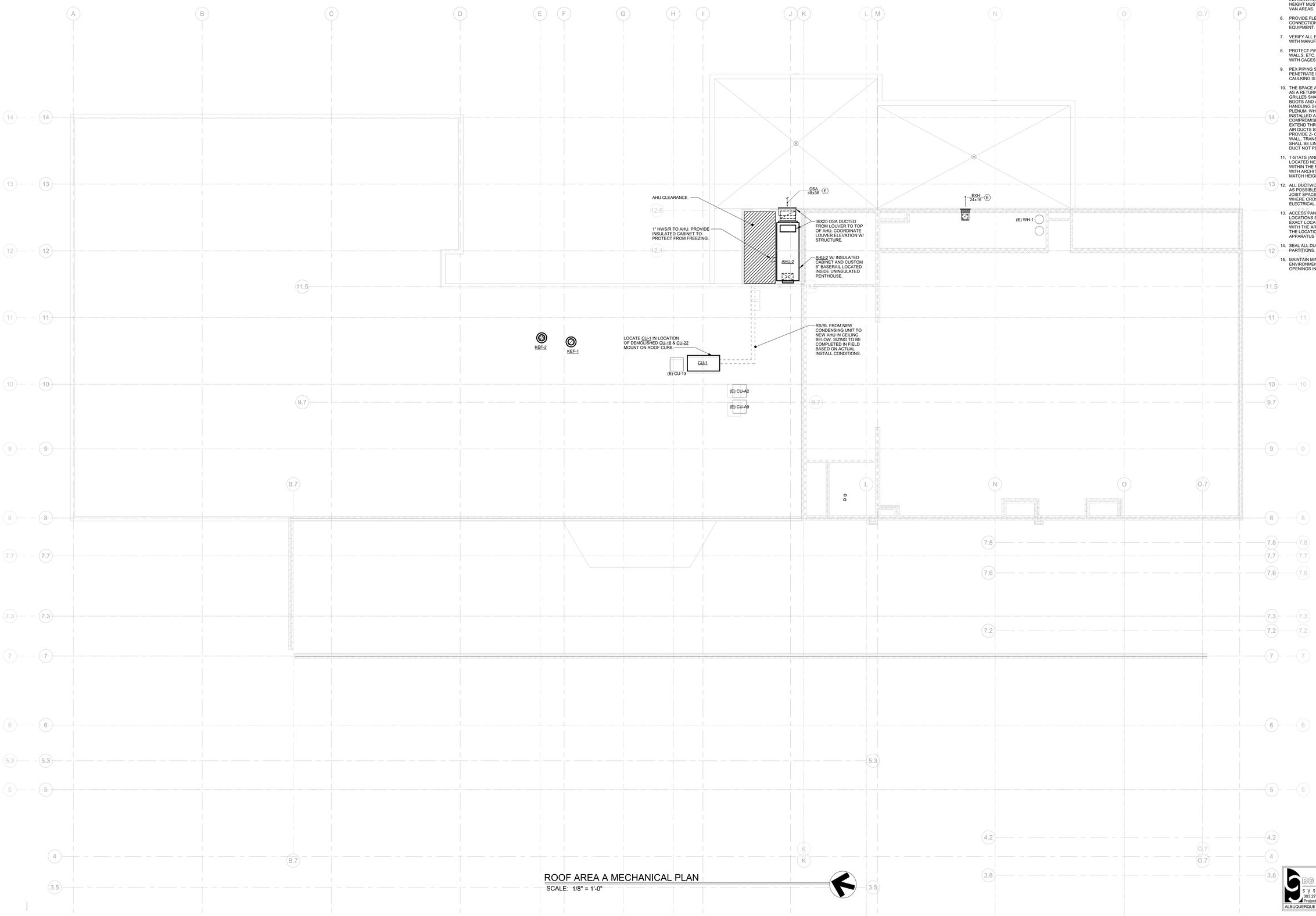


ROOF AREA A MECHANICAL PLAN
SCALE: 1/8" = 1'-0"

## NOTES:

1. [illegible] DRAWINGS.
2. COORDINATE ROUTING OF CONDENSATE PIPING WITH ARCHITECT PRIOR TO INSTALLATION.
3. CEILING COORDINATION OF ALL MEP SYSTEMS (LIGHTING, DUCTWORK, DIFFUSERS, ELECTRICAL, FIRE PROTECTION, ETC.) MUST BE COMPLETED BY THE CONTRACTOR PRIOR TO THE START OF ANY INSTALLATIONS.
4. DO NOT [illegible] OVER ELECTRICAL, ACCESSIBLE ELECTRICAL PANELS; MAINTAIN N.E.C. CLEARANCES. COORDINATE ROUTINGS WITH ELECTRICIAN.
5. CONTRACTOR TO MAINTAIN 8'-6" CLEAR HEAD HEIGHT IN GARAGE AND INFORM THE ENGINEER AND ARCHITECT OF ANY AREAS THAT MAY NOT MEET 8'-6" PRIOR TO INSTALLATION. MINIMUM 8'-2" CLEAR HEAD HEIGHT MUST BE MAINTAINED IN ACCESSIBLE VAN AREAS.
6. PROVIDE FLEXIBLE DUCT AND PIPE CONNECTIONS TO ALL MOTORIZED EQUIPMENT.
7. VERIFY ALL EQUIPMENT ACCESS PANELS WITH MANUFACTURER AND ARCHITECT.
8. PROTECT PIPING ROUTED ALONG COLUMNS, WALLS, ETC. FROM DAMAGE AS NECESSARY WITH CAGES. COORDINATE WITH ARCHITECT.
9. PEX PIPING SHALL NOT BE ALLOWED TO PENETRATE FIRE BARRIERS WHERE FIRE CAULKING IS REQUIRED.
10. THE SPACE ABOVE CEILING IS BEING UTILIZED AS A RETURN AIR PLENUM. ALL RETURN GRILLES SHALL BE PROVIDED WITH SOUND BOOTS AND A DIRECT PATH TO THE AIR HANDLING SYSTEM RETURN DUCT, OPEN TO PLENUM. WHERE FULL HEIGHT WALLS ARE INSTALLED AND THE RETURN AIR PATH IS COMPROMISED, THE SOUND BOOT SHALL EXTEND THROUGH THE WALL OR TRANSFER AIR DUCTS SHALL BE PROVIDED. OTHERWISE, PROVIDE Z- OR U- DUCT TRANSFER THROUGH WALL. TRANSFER DUCTS AND SOUND BOOTS SHALL BE LINED SHEET METAL. NON-METAL DUCT NOT PERMITTED.
11. T-STATS (AND CO2 SENSORS) SHALL BE LOCATED NEAR THE LIGHT SWITCH U.N.O. WITHIN THE ROOM SHOWN. COORDINATE WITH ARCHITECT & ELECTRICAL ENGINEER TO MATCH HEIGHT AND LOCATION.
12. ALL DUCTWORK SHALL BE ROUTED AS HIGH AS POSSIBLE IN THE CEILING SPACE. UTILIZE JOIST SPACE WHEN POSSIBLE, ESPECIALLY WHERE CROSSING OTHER DUCTS, PIPES, AND ELECTRICAL.
13. ACCESS PANELS SHALL BE 24x24, U.N.O. LOCATIONS SHOWN ARE APPROXIMATE. EXACT LOCATIONS SHALL BE COORDINATED WITH THE ARCHITECTS DRAWINGS AND WITH THE LOCATIONS OF THE EQUIPMENT OR APPARATUS THAT THEY SERVE.
14. SEAL ALL DUCT PENETRATIONS OF ACOUSTIC PARTITIONS.
15. MAINTAIN MIN. 3 FT BETWEEN ENVIRONMENTAL EXH TERMINATIONS AND OPENINGS INTO BUILDING.

**Permit Record Set**
05/14/2020


TAB Associates
*The Architectural Balance*
0056 Edwards Village Blvd.
Suite 210
Edwards, CO 81632
(970) 766-1470
fax: (970) 766-1471
email: tab@vail.net
www.tabassociates.com


GARY W. BRIDGES REGISTERED PROFESSIONAL ENGINEER 34688 STATE OF COLORADO

# STRAWBERRY PARK ELEMENTARY
## 39620 AMETHYST DRIVE
Steamboat Springs, CO

| Revisions: | | |
|---|---|---|
| No | Description | Date |
| | | |

Issue Dates:
PERMIT SET
04.06.2020

Sheet Title:
ROOF AREA A MECHANICAL PLAN

Project No:
10182.00

Sheet No:
M3.1


BG BUILDINGWORKS
systems fulfilled
303.278.3820 www.bgbuildingworks.com
Project No. 10182.00

Copyright 2020

ALBUQUERQUE | AVON | DENVER | FORT COLLINS

RCRBD Record Set
T.A.

05/14/2020

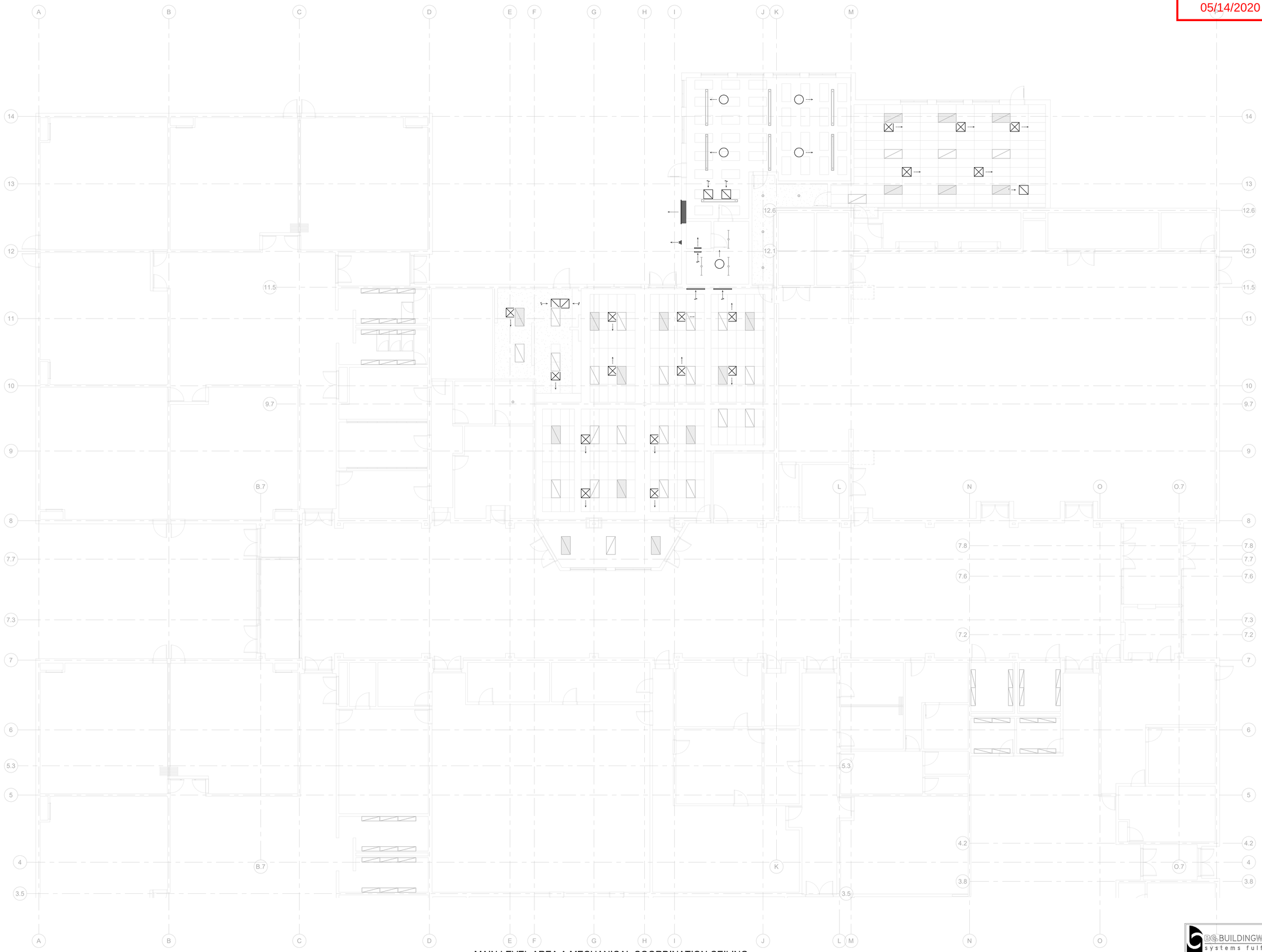

1 MAIN LEVEL AREA A MECHANICAL COORDINATION CEILING PLAN
SCALE: 1/8" = 1'-0"


TAB Associates
*The Architectural Balance*
0056 Edwards Village Blvd.
Suite 210
Edwards, CO 81632
(970) 766-1470
fax: (970) 766-1471
email: tab@vail.net
www.tabassociates.com


# STRAWBERRY PARK ELEMENTARY
## 39620 AMETHYST DRIVE
Steamboat Springs, CO

Revisions:

| No | Description | Date |
|---|---|---|
| | | |

Issue Dates:
PERMIT SET
04.06.2020

Sheet Title:
MAIN LEVEL AREA A MECHANICAL COORDINATION CEILING PLAN

Project No:
10182.00

Sheet No:
MC2.1


BG BUILDINGWORKS
systems fulfilled
303.278.3820 www.bgbuildingworks.com
Project No. 10182.00

Copyright 2020
ALBUQUERQUE | AVON | DENVER | FORT COLLINS

RCRBD Record Set
T.A.

05/14/2020

TAB Associates
*The Architectural Balance*
0056 Edwards Village Blvd.
Suite 210
Edwards, CO 81632
(970) 766-1470
fax: (970) 766-1471
email: tab@vail.net
www.tabassociates.com

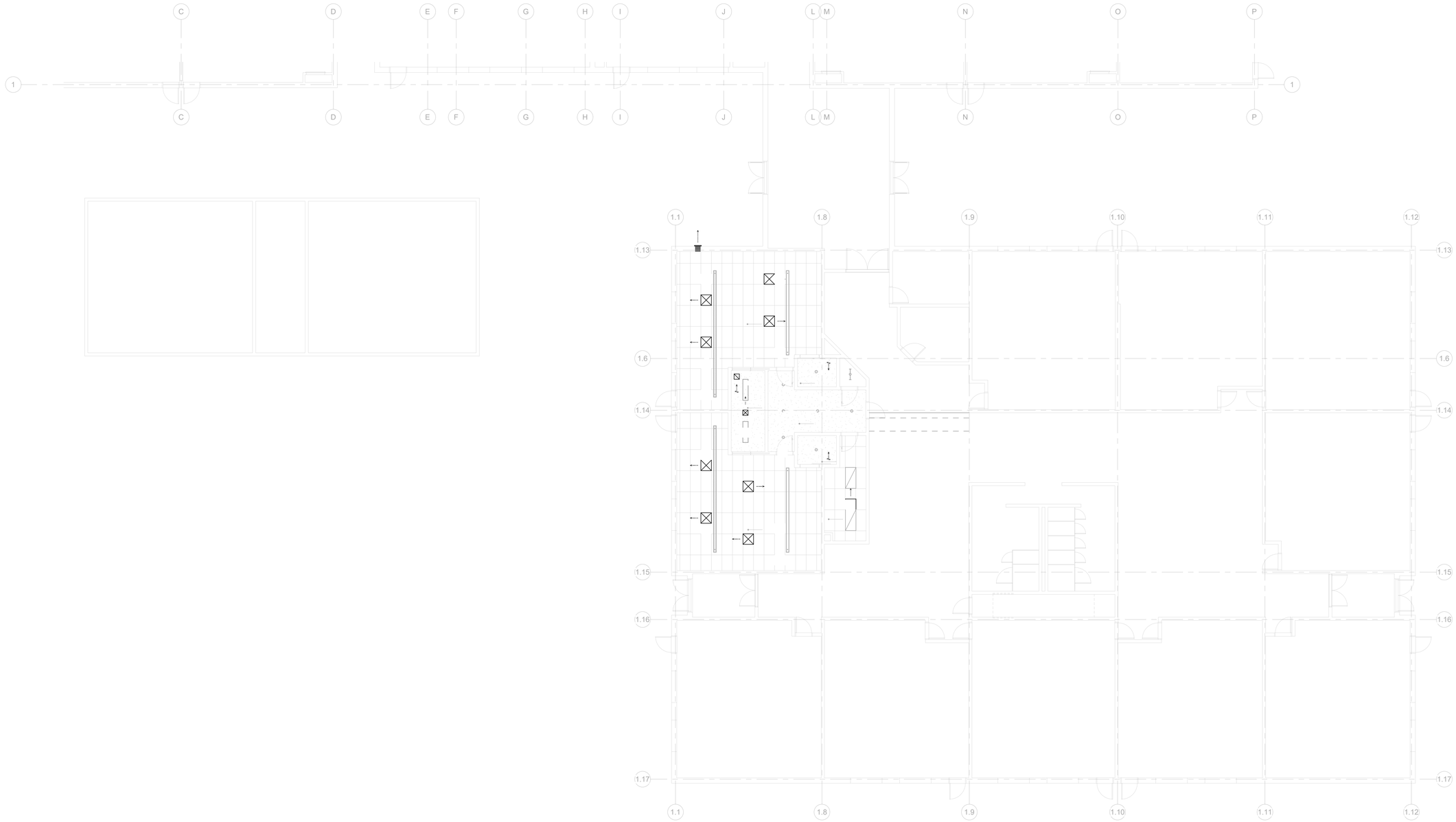


PRE-K PLAN AREA B MECHANICAL COORDINATION CEILING PLAN

SCALE: 1/8" = 1'-0"

# STRAWBERRY PARK ELEMENTARY
## 39620 AMETHYST DRIVE
Steamboat Springs, CO

Revisions:

| No | Description | Date |
|---|---|---|
| | | |

Issue Dates:
PERMIT SET
04.06.2020

Sheet Title:
PRE-K PLAN AREA B MECHANICAL COORDINATION CEILING PLAN

Project No:
10182.00

Sheet No:
MC2.2

BG BUILDINGWORKS
systems fulfilled
303.278.3820 www.bgbuildingworks.com
Project No. 10182.00
Copyright 2020
ALBUQUERQUE | AVON | DENVER | FORT COLLINS

RCRBD Record Set
T.A.

05/14/2020

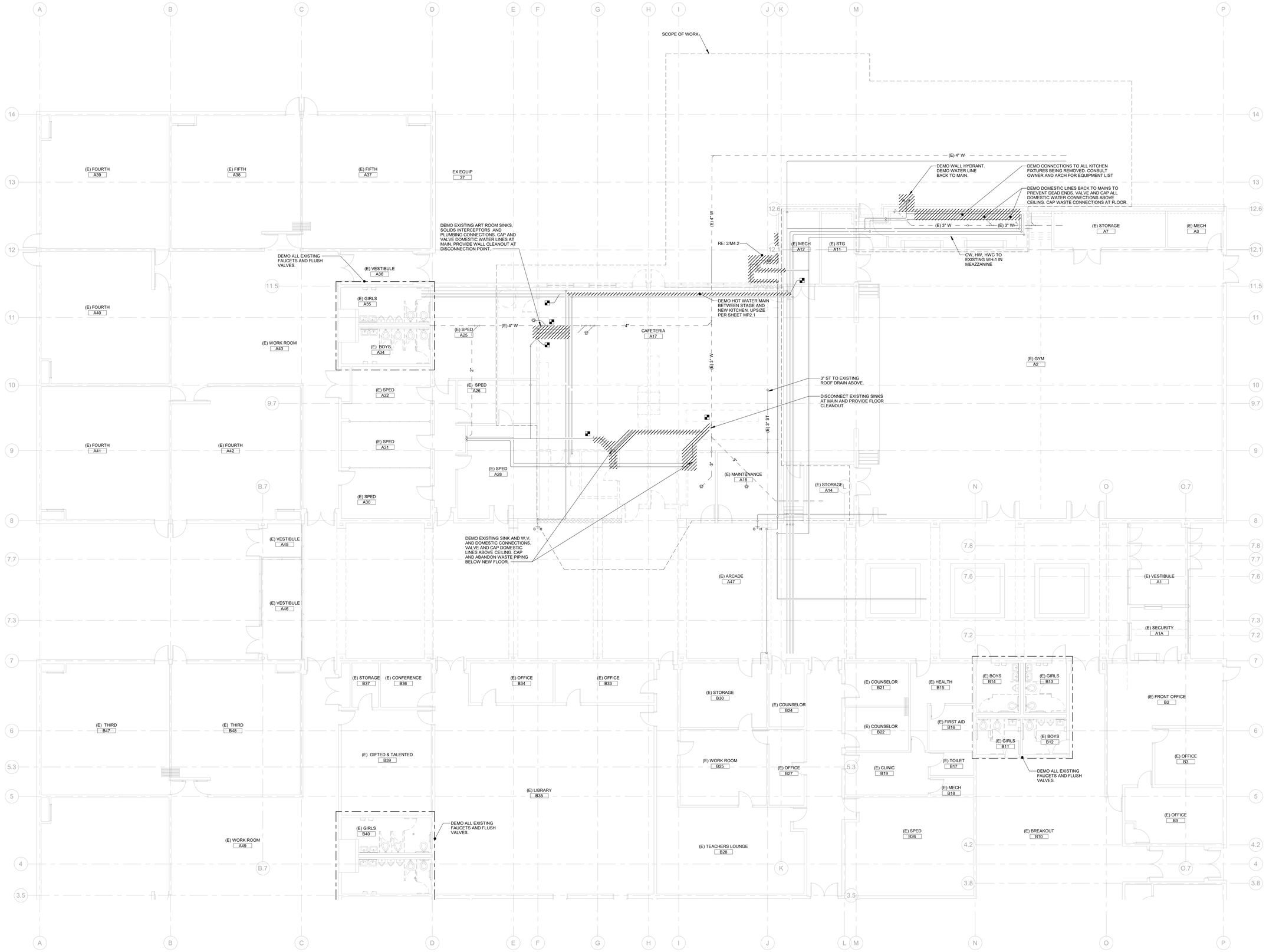


MAIN LEVEL AREA A DEMO PLUMBING PLAN
SCALE: 1/8" = 1'-0"


TAB Associates
*The Architectural Balance*
0056 Edwards Village Blvd.
Suite 210
Edwards, CO 81632
(970) 766-1470
fax: (970) 766-1471
email: tab@vail.net
www.tabassociates.com


STATE OF COLORADO REGISTERED PROFESSIONAL ENGINEER 34688

# STRAWBERRY PARK ELEMENTARY
# 39620 AMETHYST DRIVE
## Steamboat Springs, CO

Revisions:

| No | Description | Date |
|---|---|---|
| | | |

Issue Dates:
PERMIT SET
04.06.2020

Sheet Title:
MAIN LEVEL AREA A DEMO PLUMBING PLAN

Project No:
10182.00

Sheet No:
MPD2.1


BG BUILDINGWORKS
systems fulfilled
303.278.3820 www.bgbuildingworks.com
Project No. 10182.00

Copyright 2020
ALBUQUERQUE | AVON | DENVER | FORT COLLINS

RCRBD Record Set
T.A.

05/14/2020

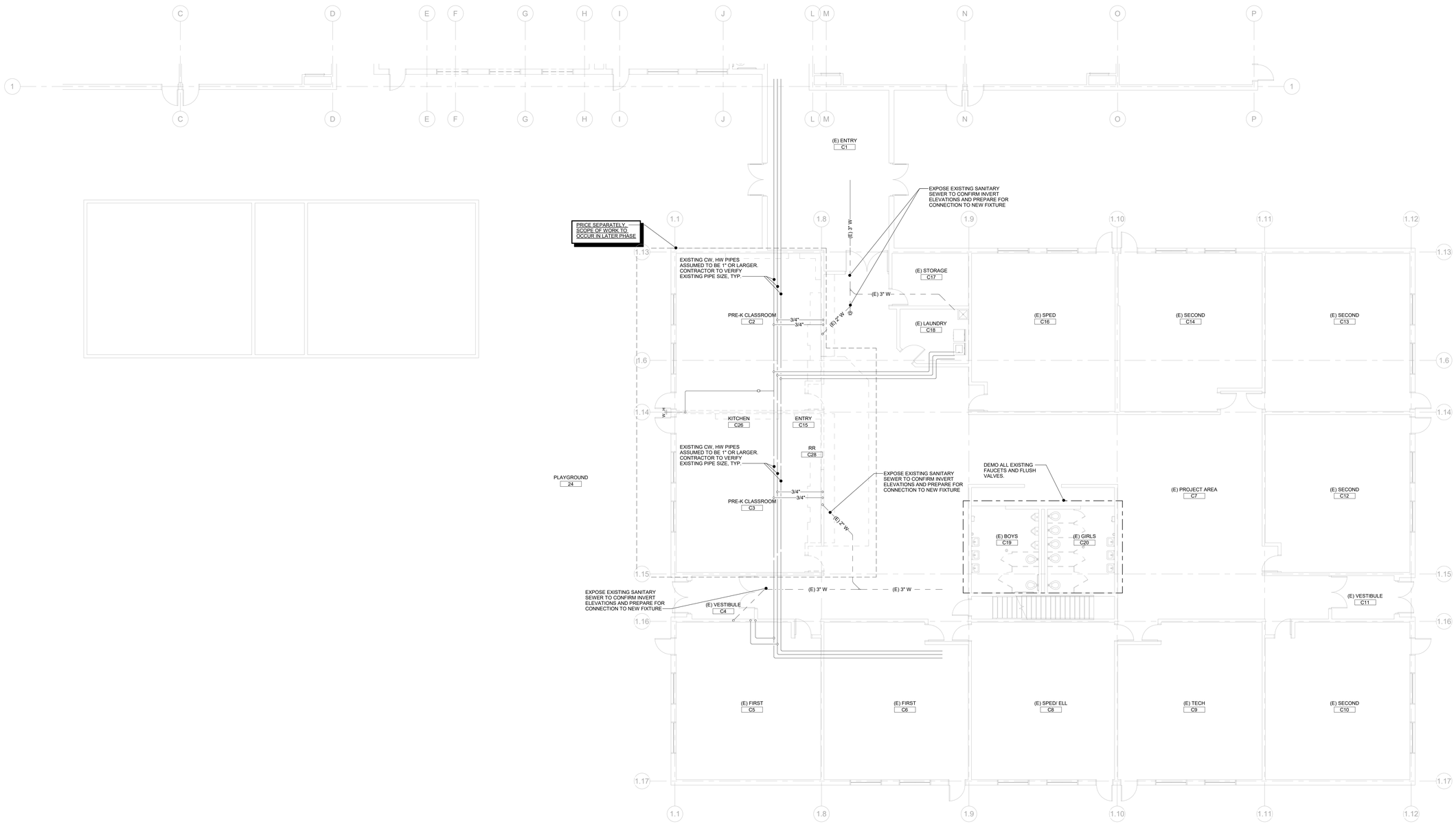


PRE-K PLAN AREA B DEMO PLUMBING PLAN
SCALE: 1/8" = 1'-0"


TAB Associates
The Architectural Balance
0056 Edwards Village Blvd.
Suite 210
Edwards, CO 8132
(970) 766-1470
fax: (970) 766-1471
email: tab@vail.net
www.tabassociates.com

# STRAWBERRY PARK ELEMENTARY
# 39620 AMETHYST DRIVE
Steamboat Springs, CO

Revisions:

| No | Description | Date |
|---|---|---|
| | | |

Issue Dates:
PERMIT SET
04.06.2020

Sheet Title:
PRE-K PLAN AREA B DEMO PLUMBING PLAN

Project No:
10182.00

Sheet No:
MPD2.2


BG BUILDINGWORKS
systems fulfilled
303.278.3820 www.bgbuildingworks.com
Project No. 10182.00 Copyright 2020
ALBUQUERQUE | AVON | DENVER | FORT COLLINS

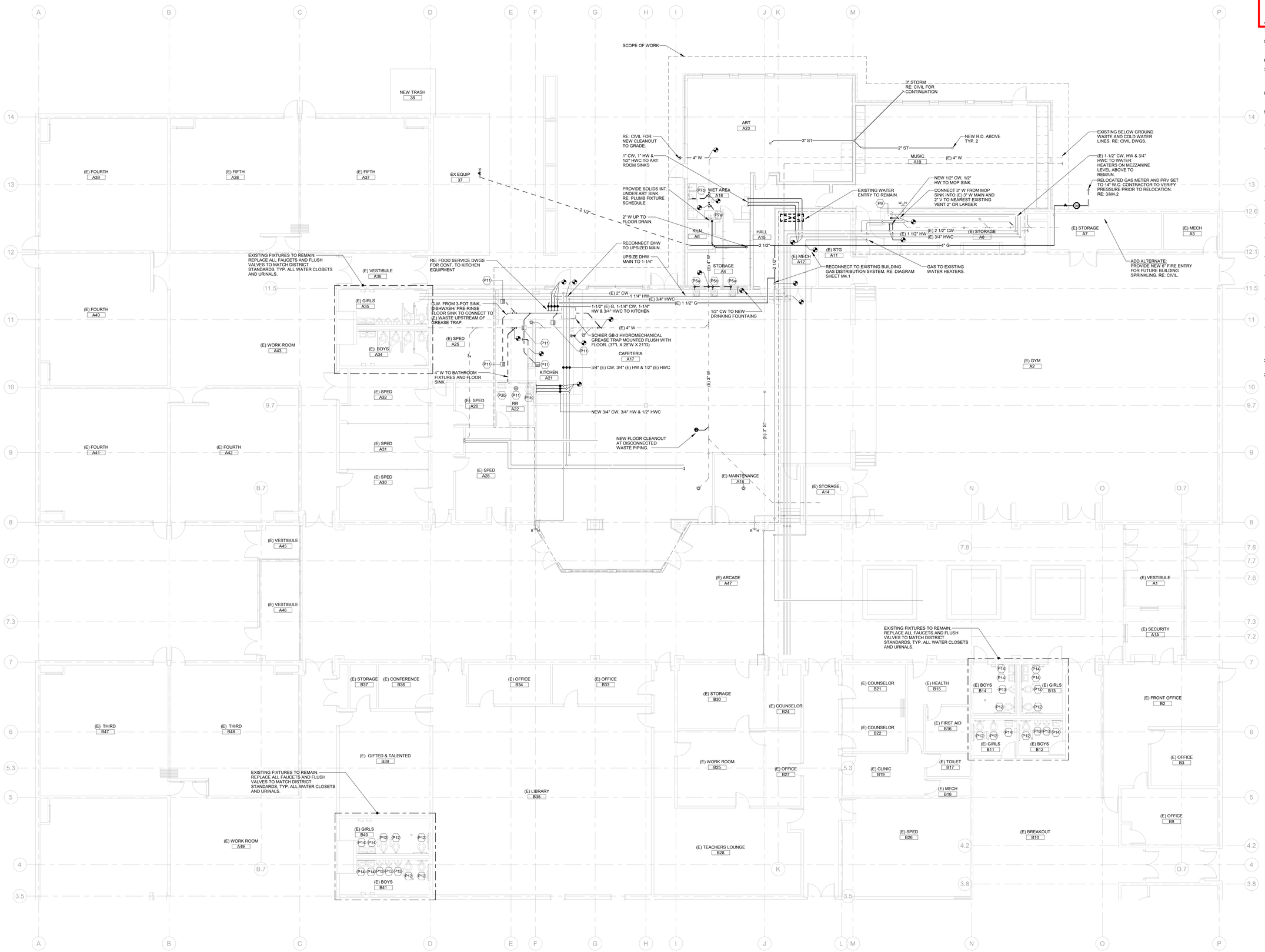


## MAIN LEVEL AREA A PLUMBING PLAN

SCALE: 1/8" = 1'-0"

## NOTES:

1. [illegible] SERIES FOR MECHANICAL DIAGRAMS.
2. REFER TO THE PLUMBING FIXTURE SCHEDULE FOR PIPE SIZES TO FIXTURES.
3. NOT ALL REQUIRED CLEANOUTS ARE NECESSARILY SHOWN ON THESE PLANS. PROVIDE CLEANOUTS ON WASTE, VENT AND STORM PIPING AS REQUIRED BY CODE AND FOR REASONABLE MAINTENANCE BASED ON ACTUAL FIELD INSTALLATION. COORDINATE LOCATIONS WITH ARCHITECT/ ENGINEER.
4. COORDINATE ROUTING OF CONDENSATE DRAIN LINES WITH ARCHITECT PRIOR TO INSTALLATION.
5. PIPING ON EXTERIOR WALLS OR PRE-CAST CONCRETE WALLS TO BE ROUTED IN FRAMED WALL ON INTERIOR SIDE OF INSULATION.
6. ST AND ST(OF) PIPING 3", U.N.O.
7. INSTALL THERMOSTATIC MIXING VALVES, ASSE 1070 LISTED, AT EACH PUBLIC HANDWASHING LAVATORY/SINK. SIZE TO MATCH HW PIPE SIZE.
8. ROOF OVERFLOW DRAINAGE STRATEGY TO BE DETERMINED OR VIA ARCHITECTURAL SCUPPERS U.N.O.
9. TERMINATE PLUMBING VENTS NOT LESS THAN 12" ABOVE ROOF.
10. DO NOT ROUTE PIPING OVER ELECTRICAL ROOMS OR ELECTRICAL PANELS. MAINTAIN N.E.C. CLEARANCES. COORDINATE ROUTINGS WITH DIV. 16 CONTRACTOR.
11. CONTRACTOR TO MAINTAIN 8'-6" CLEAR HEAD HEIGHT IN GARAGE AND INFORM THE ENGINEER AND ARCHITECT OF ANY AREAS THAT MAY NOT MEET 8'-6" PRIOR TO INSTALLATION. MINIMUM 8'-2" CLEAR HEAD HEIGHT MUST BE MAINTAINED IN ACCESSIBLE VEHICLE AREAS.
12. PROVIDE FLEXIBLE PIPE CONNECTIONS TO ALL MOTORIZED EQUIPMENT.
13. ROUTE DOMESTIC HOT WATER RECIRC TO WITHIN 10 FEET OF ALL HOT WATER FIXTURES. CONNECT WITHIN 2 FEET OF PUBLIC LAVATORY FAUCETS.
14. VERIFY ALL EQUIPMENT ACCESS PANELS WITH MANUFACTURER AND ARCHITECT.
15. PROTECT PIPING ROUTED ALONG COLUMNS, WALLS, ETC. FROM DAMAGE AS NECESSARY WITH CAGES. COORDINATE WITH ARCHITECT.
16. PEX PIPING SHALL NOT BE ALLOWED TO PENETRATE FIRE BARRIERS WHERE FIRE CAULKING IS REQUIRED.
17. ALL VALVES SHALL BE INSTALLED ABOVE DROP-IN CEILINGS IN ACCESSIBLE LOCATIONS, OR WITH ACCESS PANELS IN HARD-LID CEILINGS.
18. ALL PIPING SHALL BE ROUTED AS HIGH AS POSSIBLE IN THE CEILING SPACE. UTILIZE JOIST SPACE WHEN POSSIBLE, ESPECIALLY WHERE CROSSING OTHER PIPES, DUCTS, AND ELECTRICAL.
19. ACCESS PANELS SHALL BE 24x24, U.N.O. LOCATIONS SHOWN ARE APPROXIMATE. EXACT LOCATIONS SHALL BE COORDINATED WITH THE ARCHITECTS DRAWINGS AND WITH THE LOCATIONS OF THE EQUIPMENT OR APPARATUS THAT THEY SERVE.
20. SEAL ALL PIPING PENETRATIONS THROUGH ACOUSTIC PARTITIONS.
21. EXPOSED SOIL OR WASTE PIPING SHALL NOT BE INSTALLED ABOVE ANY WORKING, STORAGE, OR EATING SURFACES IN FOOD SERVICE ESTABLISHMENTS.

RC/CAD/Record Set
JCB
05/14/2020

TAB Associates
*The Architectural Balance*
0056 Edwards Village Blvd.
Suite 210
Edwards, CO 81632
(970) 766-1470
fax: (970) 766-1471
email: tab@vail.net
www.tabassociates.com

# STRAWBERRY PARK ELEMENTARY
## 39620 AMETHYST DRIVE
### Steamboat Springs, CO

| Revisions: | | |
|---|---|---|
| No | Description | Date |
| | | |

**Issue Dates:**
PERMIT SET
04.06.2020

**Sheet Title:**
MAIN LEVEL AREA A PLUMBING PLAN

**Project No:**
10182.00

**Sheet No:**
MP2.1

BG BUILDINGWORKS
systems fulfilled
303.278.3820 www.bgbuildingworks.com
Project No. 10182.00
Copyright 2020
ALBUQUERQUE | AVON | DENVER | FORT COLLINS

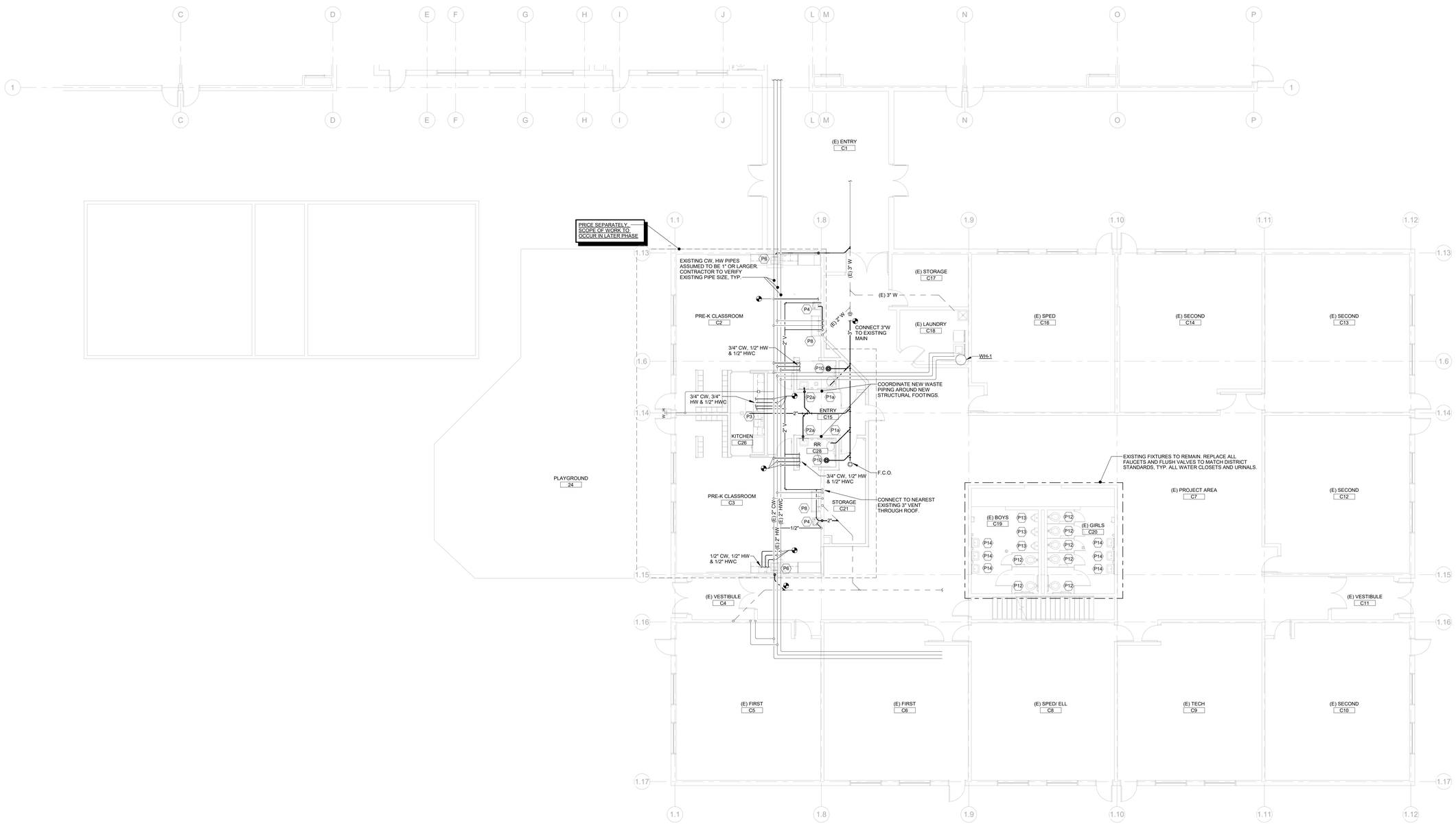


PRE-K PLAN AREA B PLUMBING PLAN

SCALE: 1/8" = 1'-0"

## NOTES:

1. [illegible] SERVICE OR MECHANICAL DIVISIONS.
2. REFER TO THE PLUMBING FIXTURE CONNECTION SCHEDULE FOR PIPE SIZES TO FIXTURE CONNECTIONS.
3. NOT ALL REQUIRED CLEANOUTS ARE NECESSARILY SHOWN ON THESE PLANS. PROVIDE CLEANOUTS ON WASTE, VENT AND STORM PIPING AS REQUIRED BY CODE AND FOR REASONABLE MAINTENANCE BASED ON ACTUAL FIELD INSTALLATION. COORDINATE LOCATIONS WITH ARCHITECT AND ENGINEER.
4. COORDINATE ROUTING OF CONDENSATE DRAIN LINES WITH ARCHITECT PRIOR TO INSTALLATION.
5. PIPING ON EXTERIOR WALLS OR PRE-CAST CONCRETE WALLS TO BE ROUTED IN FRAMED WALL ON INTERIOR SIDE OF INSULATION.
6. ST AND ST(OF) PIPING 3", U.N.O.
7. INSTALL THERMOSTATIC MIXING VALVES, ASSE 1070 LISTED, AT EACH PUBLIC HANDWASHING LAVATORY/SINK. SIZE TO MATCH HW PIPE SIZE.
8. ROOF OVERFLOW DRAINAGE STRATEGY TO BE DETERMINED OR VIA ARCHITECTURAL SCUPPERS U.N.O.
9. TERMINATE PLUMBING VENTS NOT LESS THAN 12" ABOVE ROOF.
10. DO NOT ROUTE PIPING OVER ELECTRICAL ROOMS OR ELECTRICAL PANELS; MAINTAIN N.E.C. CLEARANCES. COORDINATE ROUTINGS WITH DIV. 16 CONTRACTOR.
11. CONTRACTOR TO MAINTAIN 8'-6" CLEAR HEAD HEIGHT IN GARAGE AND INFORM THE ENGINEER AND ARCHITECT OF ANY AREAS THAT MAY NOT MEET 8'-6" PRIOR TO INSTALLATION. MINIMUM 8'-2" CLEAR HEAD HEIGHT MUST BE MAINTAINED IN ACCESSIBLE VEHICLE AREAS.
12. PROVIDE FLEXIBLE PIPE CONNECTIONS TO ALL MOTORIZED EQUIPMENT.
13. ROUTE DOMESTIC HOT WATER RECIRC TO WITHIN 10 FEET OF ALL HOT WATER FIXTURES. CONNECT WITHIN 2 FEET OF PUBLIC LAVATORY FAUCETS.
14. VERIFY ALL EQUIPMENT ACCESS PANELS WITH MANUFACTURER AND ARCHITECT.
15. PROTECT PIPING ROUTED ALONG COLUMNS, WALLS, ETC. FROM DAMAGE AS NECESSARY WITH CAGES. COORDINATE WITH ARCHITECT.
16. PEX PIPING SHALL NOT BE ALLOWED TO PENETRATE FIRE BARRIERS WHERE FIRE CAULKING IS REQUIRED.
17. ALL VALVES SHALL BE INSTALLED ABOVE DROP-IN CEILINGS IN ACCESSIBLE LOCATIONS, OR WITH ACCESS PANELS IN HARD-LID CEILINGS.
18. ALL PIPING SHALL BE ROUTED AS HIGH AS POSSIBLE IN THE CEILING SPACE. UTILIZE JOIST SPACE WHEN POSSIBLE, ESPECIALLY WHERE CROSSING OTHER PIPES, DUCTS, AND ELECTRICAL.
19. ACCESS PANELS SHALL BE 24x24, U.N.O. LOCATIONS SHOWN ARE APPROXIMATE. EXACT LOCATIONS SHALL BE COORDINATED WITH THE ARCHITECTS DRAWINGS AND WITH THE LOCATIONS OF THE EQUIPMENT OR APPARATUS THAT THEY SERVE.
20. SEAL ALL PIPING PENETRATIONS THROUGH ACOUSTIC PARTITIONS.
21. EXPOSED SOIL OR WASTE PIPING SHALL NOT BE INSTALLED ABOVE ANY WORKING, STORAGE, OR EATING SURFACES IN FOOD SERVICE ESTABLISHMENTS.

RCHSD Record Set
Review
05/14/2020


TAB Associates
*The Architectural Balance*
0056 Edwards Village Blvd.
Suite 210
Edwards, CO 81632
(970) 766-1470
fax: (970) 766-1471
email: tab@vail.net
www.tabassociates.com

# STRAWBERRY PARK ELEMENTARY
## 39620 AMETHYST DRIVE
### Steamboat Springs, CO

| Revisions: | | |
|---|---|---|
| No | Description | Date |
| | | |

Issue Dates:
PERMIT SET
04.06.2020

Sheet Title:
PRE-K PLAN AREA B PLUMBING PLAN

Project No:
10182.00

Sheet No:
MP2.2


BG BUILDINGWORKS
systems fulfilled
303.278.3820 www.bgbuildingworks.com
Project No. 10182.00

Copyright 2020

ALBUQUERQUE | AVON | DENVER | FORT COLLINS

RCRBD Record Set
T.A.

05/14/2020

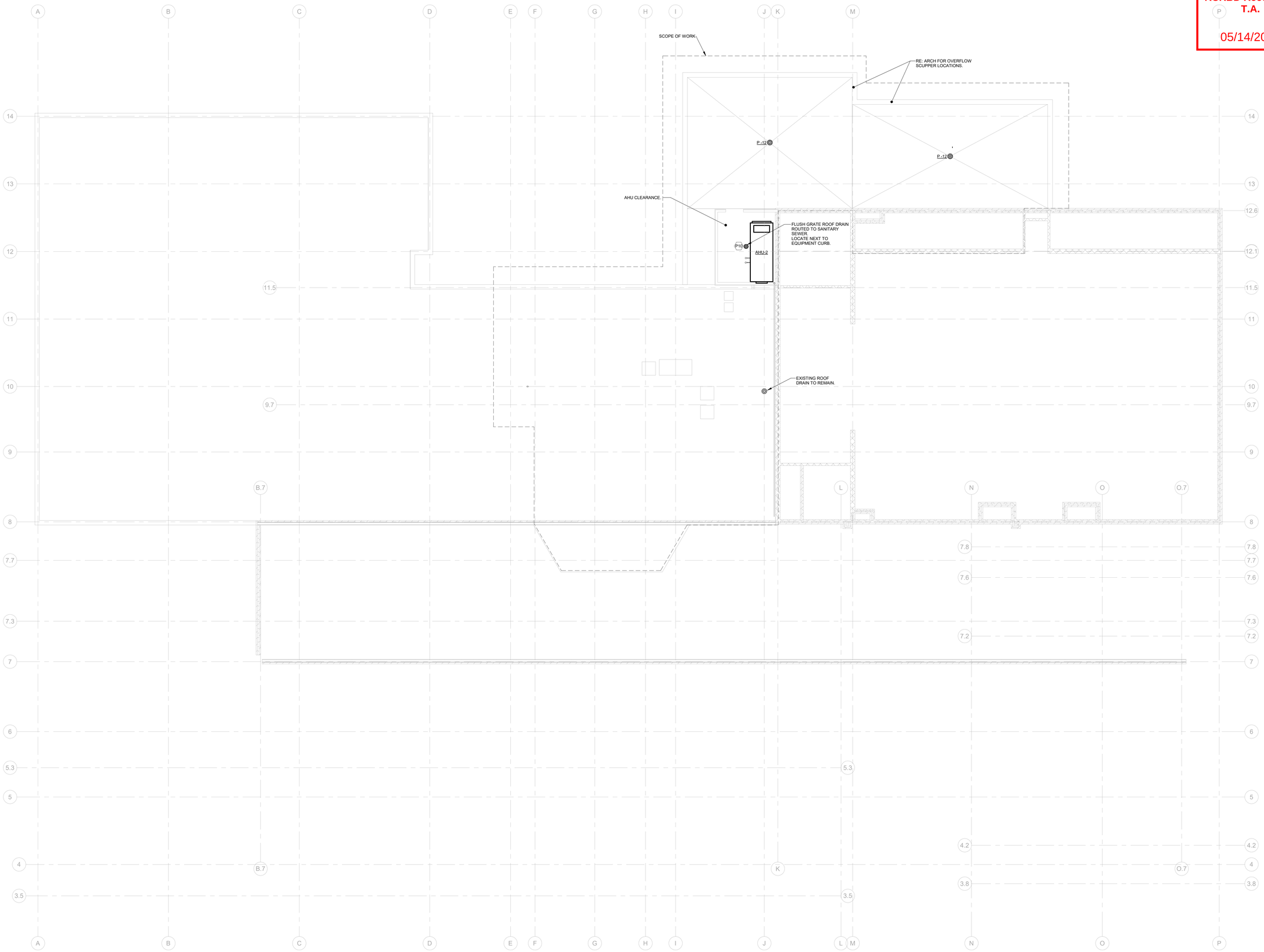


ROOF AREA A PLUMBING PLAN
SCALE: 1/8" = 1'-0"


TAB Associates
*The Architectural Balance*
0056 Edwards Village Blvd.
Suite 210
Edwards, CO 8132
(970) 766-1470
fax: (970) 766-1471
email: tab@vail.net
www.tabassociates.com


# STRAWBERRY PARK ELEMENTARY
## 39620 AMETHYST DRIVE
Steamboat Springs, CO

| Revisions: | | |
|---|---|---|
| No | Description | Date |
| | | |

Issue Dates:
PERMIT SET
04.06.2020

Sheet Title:
ROOF AREA A PLUMBING PLAN

Project No:
10182.00

Sheet No:
MP3.1


BG BUILDINGWORKS
systems fulfilled
303.278.3820 www.bgbuildingworks.com
Project No. 10182.00

Copyright 2020
ALBUQUERQUE | AVON | DENVER | FORT COLLINS

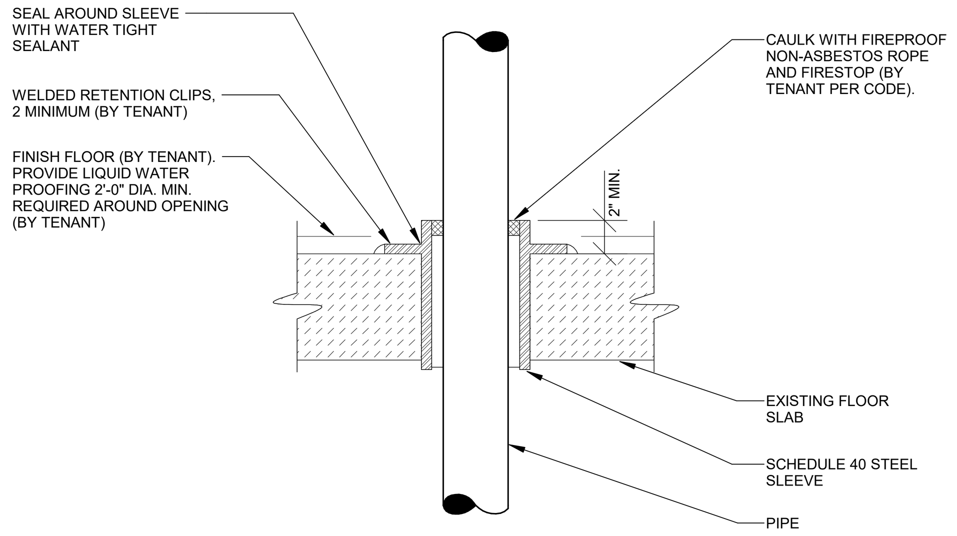


## TYPICAL PIPE PENETRATION DIAGRAM
NO SCALE

-

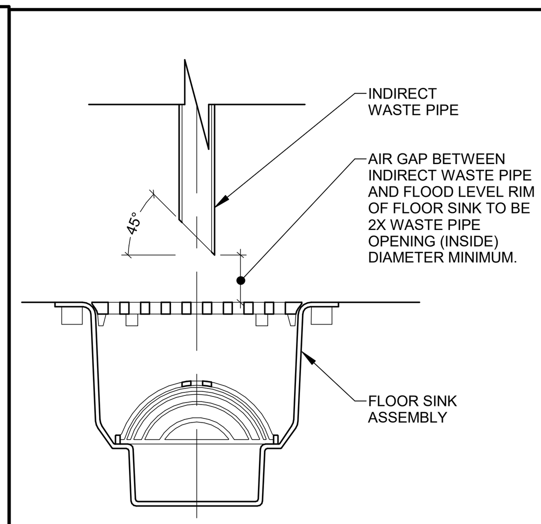


## INDIRECT WASTE LINE TERMINATION DETAIL
NO SCALE

-

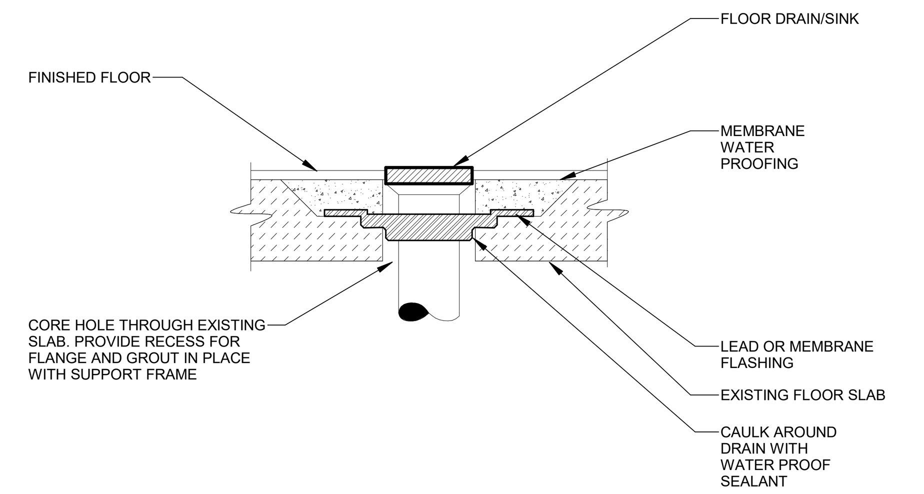


## TYPICAL FLOOR DRAIN/SINK AT EXISTING FLOOR DIAGRAM
NO SCALE

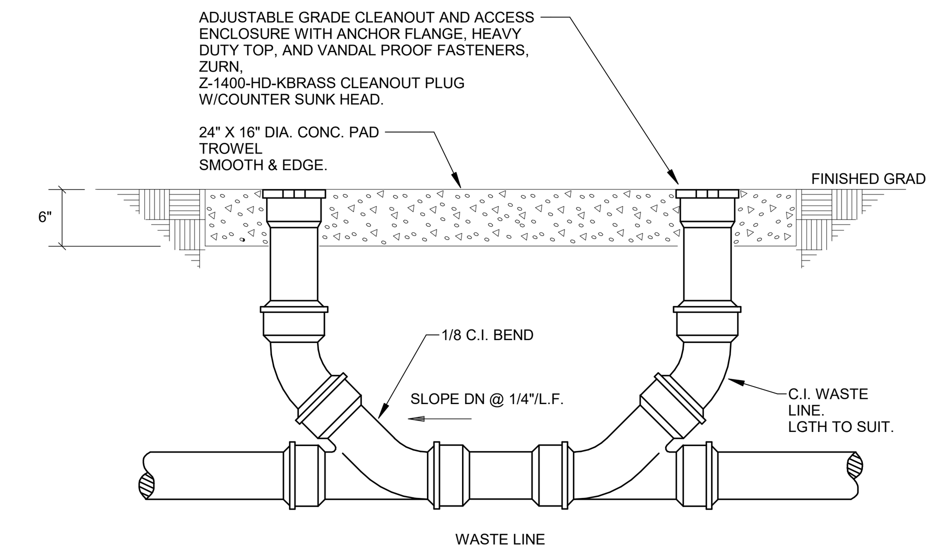


## TWO-WAY CLEANOUT TO GRADE DIAGRAMS
NO SCALE

-

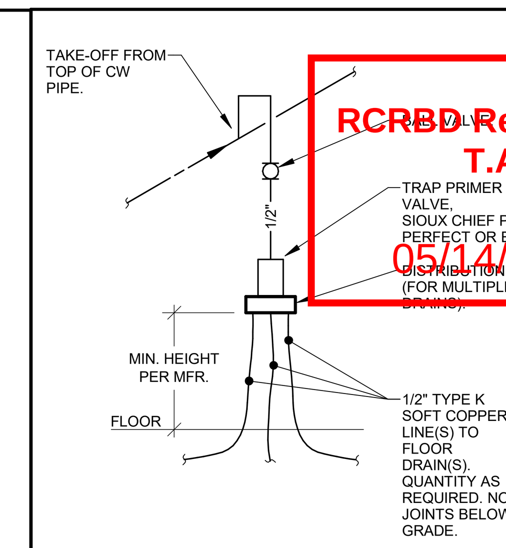


RCRBD Record Set
T.A.
05/14/2020

## TRAP PRIMER CONNECTION DIAGRAM
NO SCALE

-

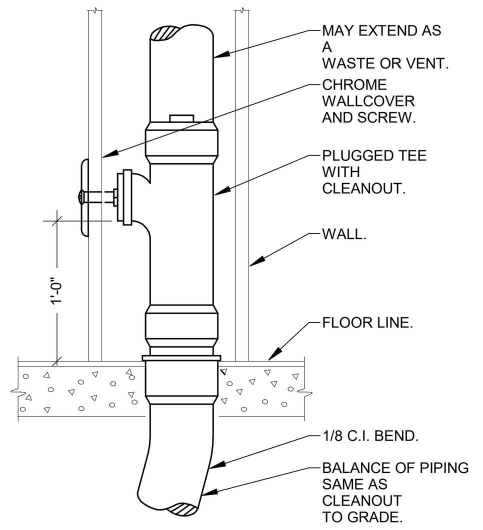


## WALL CLEANOUT DIAGRAM
NO SCALE

-

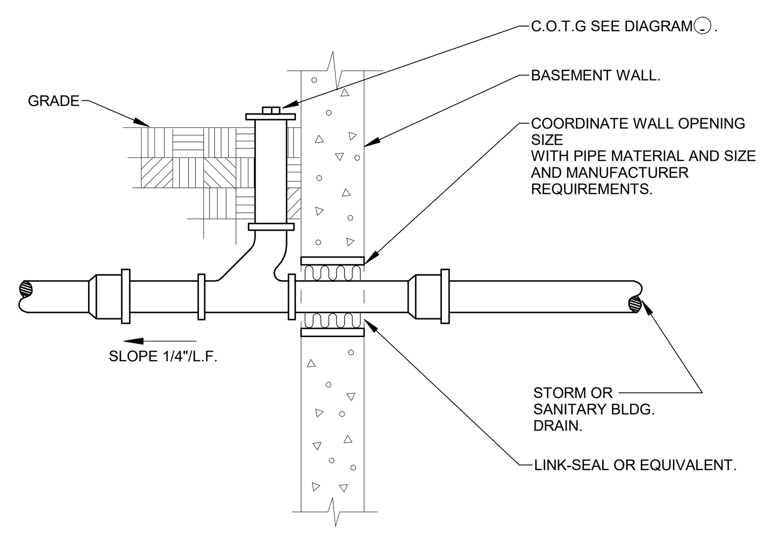


## SANITARY OR STORM BLDG. DRAIN THRU WALL DIAGRAM
NO SCALE

-

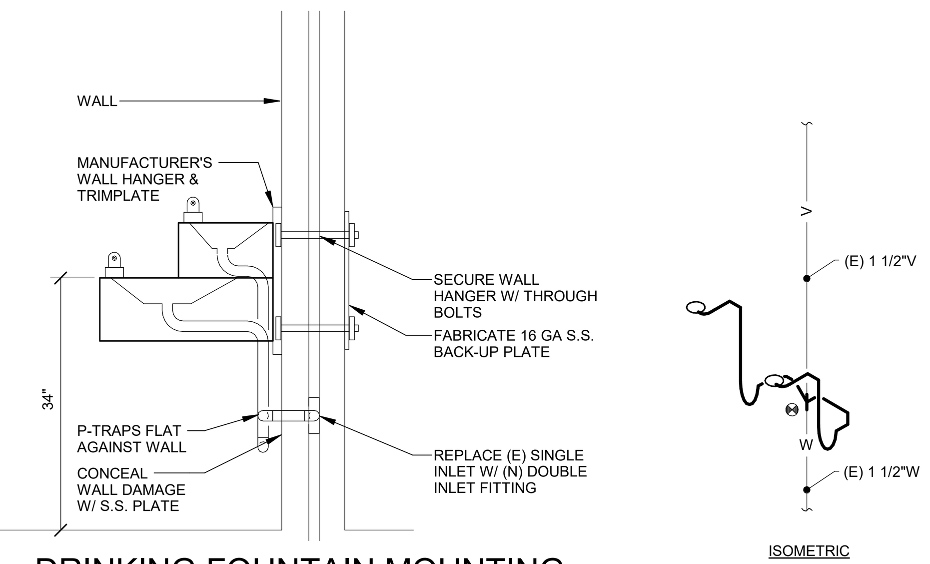


## DRINKING FOUNTAIN MOUNTING DIAGRAM & ISOMETRIC
NO SCALE

-

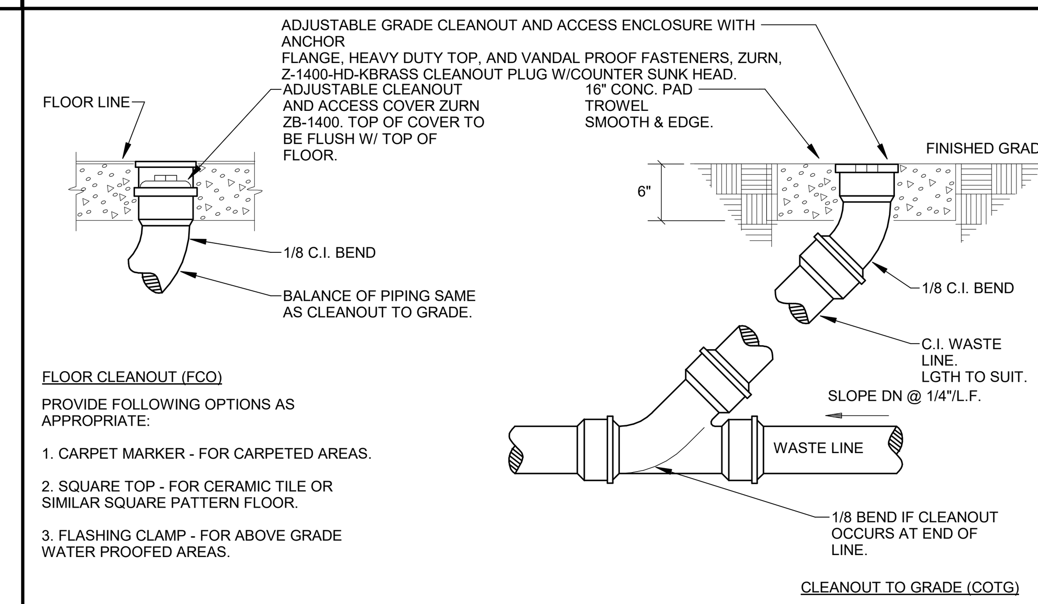


FLOOR CLEANOUT (FCO)

PROVIDE FOLLOWING OPTIONS AS APPROPRIATE:

1. CARPET MARKER - FOR CARPETED AREAS.
2. SQUARE TOP - FOR CERAMIC TILE OR SIMILAR SQUARE PATTERN FLOOR.
3. FLASHING CLAMP - FOR ABOVE GRADE WATER PROOFED AREAS.

## CLEANOUT DIAGRAMS
NO SCALE

-

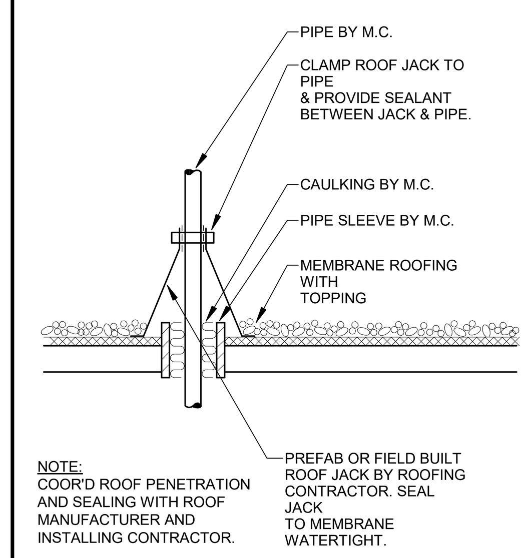


NOTE:
COOR'D ROOF PENETRATION AND SEALING WITH ROOF MANUFACTURER AND INSTALLING CONTRACTOR.

## PIPE THRU ROOF DIAGRAM
NO SCALE

(MEMBRANE ROOF)

-

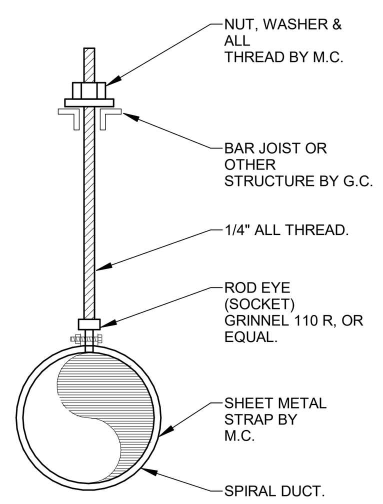


## DUCT HANGER DIAGRAM
NO SCALE

-

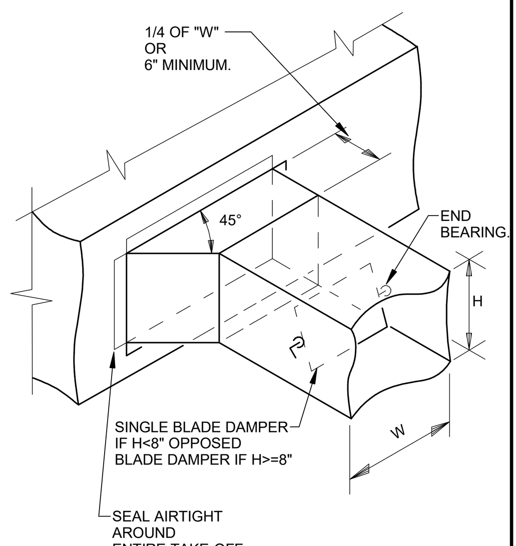


## 45° DUCT TAKE-OFF DIAGRAM
NO SCALE

-

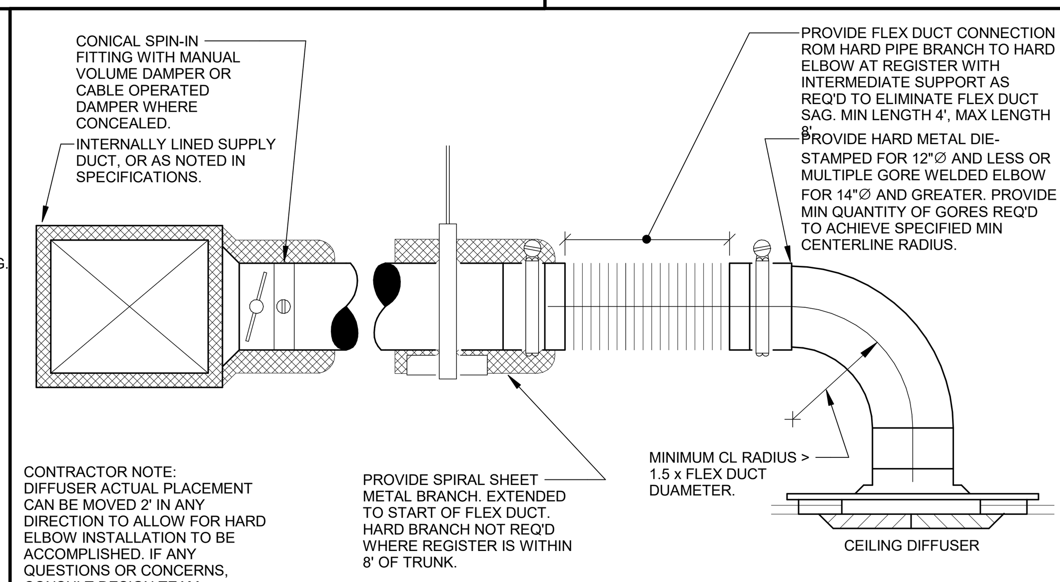


CONTRACTOR NOTE:
DIFFUSER ACTUAL PLACEMENT CAN BE MOVED 2' IN ANY DIRECTION TO ALLOW FOR HARD ELBOW INSTALLATION TO BE ACCOMPLISHED. IF ANY QUESTIONS OR CONCERNS, CONSULT DESIGN TEAM.

## SPIRAL ELBOW DIFFUSER CONNECTION DIAGRAM
NO SCALE

-

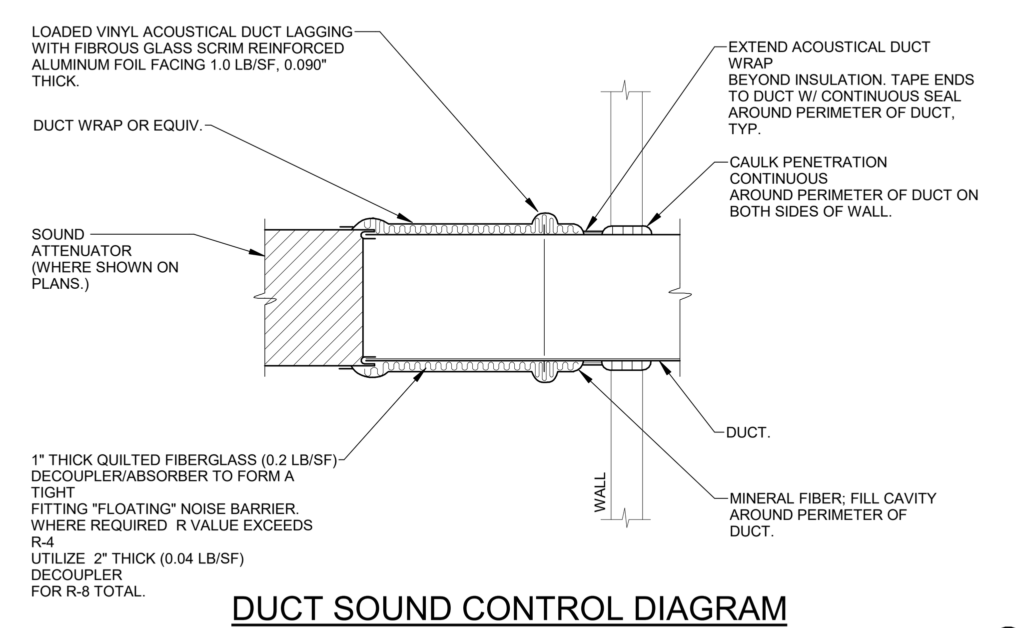


## DUCT SOUND CONTROL DIAGRAM
NO SCALE

(DUCT THRU WALL)

-

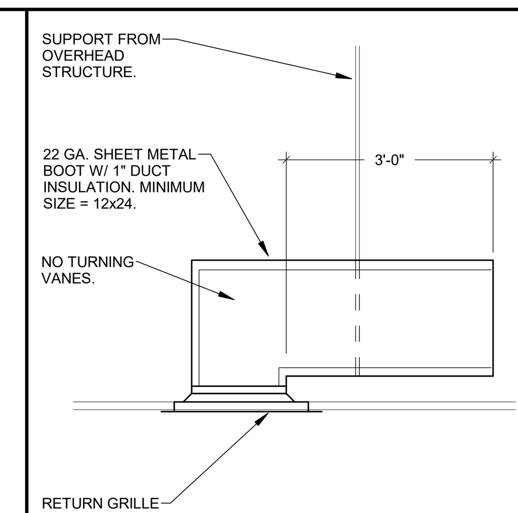


## RETURN AIR GRILLE SOUND BOOT DIAGRAM
NO SCALE

-

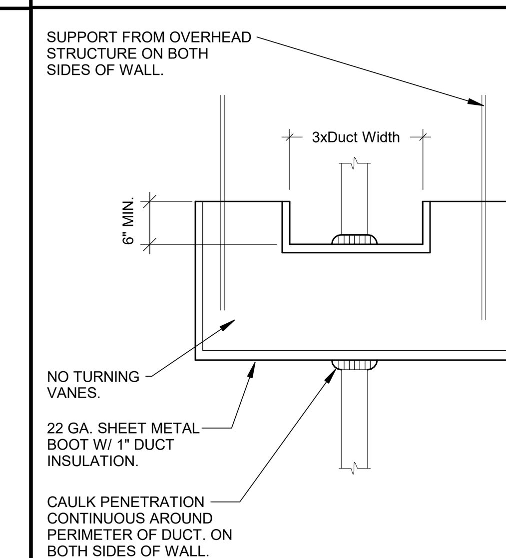


## RETURN AIR GRILLE SOUND BOOT DIAGRAM
NO SCALE

-

NOTE:
COORDINATE ROOF PENETRATIONS WITH ROOFING MANUFACTURER.

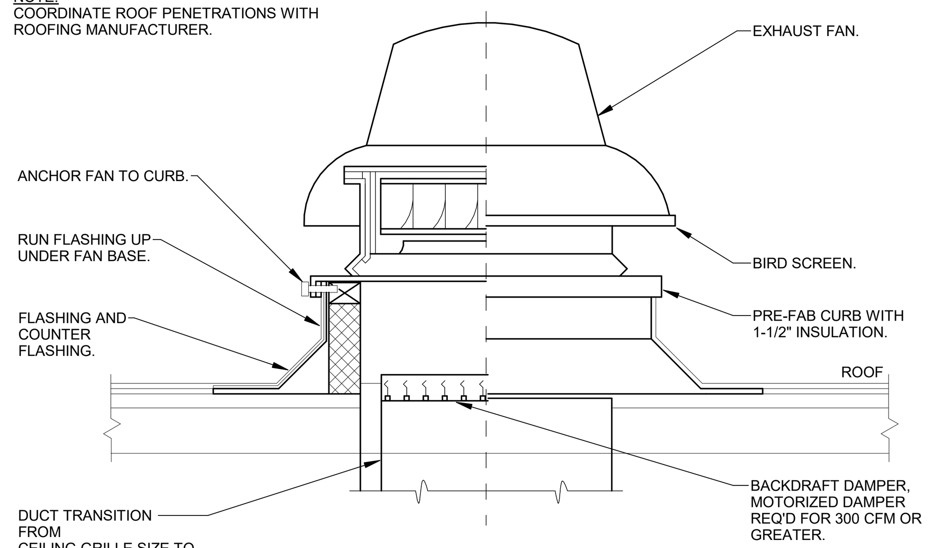


## ROOF EXHAUST FAN DIAGRAM
NO SCALE

( FLAT ROOF )

-

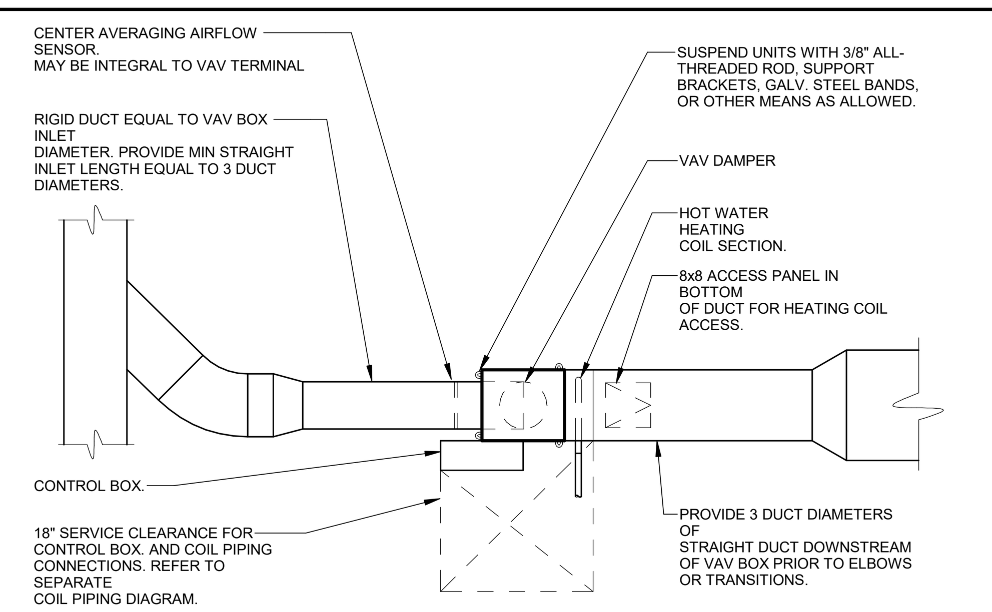


## VAV BOX DIAGRAM (PRESSURE INDEPENDENT)
NO SCALE

-

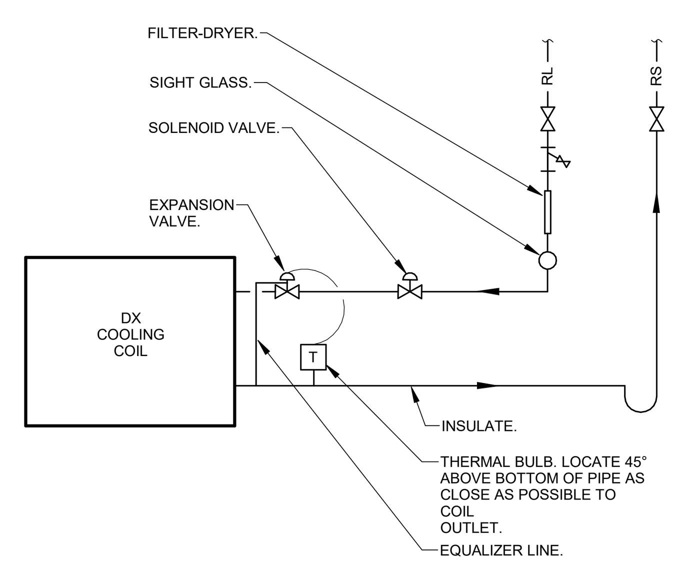


## DX COIL PIPING DIAGRAM
NO SCALE

-

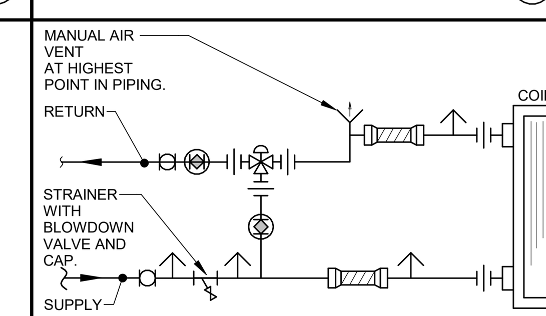


NOTES:
1. FLEXIBLE PIPE CONNECTOR REQ'D FOR EQUIPMENT CONTAINING FANS OR COMPRESSORS, NOT REQ'D FOR EQUIPMENT SUCH AS DUCT COILS.
2. PIPE ALL MULTI-ROW COILS FOR COUNTERFLOW (WATER ENTERS MOST DOWNSTREAM COIL, LEAVES MOST UPSTREAM COIL).
3. REFER TO CONTROLS DRAWINGS FOR ADDITIONAL INFORMATION.
4. 3-WAY VALVE WITH COIL RETURN PIPED TO NORMALLY OPEN PORT FOR HEATING AND NORMALLY CLOSED PORT FOR COOLING.

## 3-WAY (DIVERTING VALVE) COIL PIPING DIAGRAM
NO SCALE

-

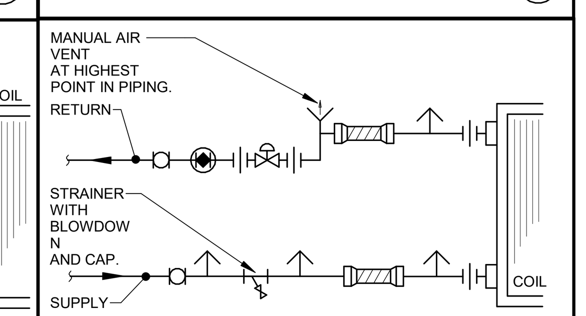


NOTES:
1. FLEXIBLE PIPE CONNECTOR REQ'D FOR EQUIPMENT CONTAINING FANS OR COMPRESSORS, NOT REQ'D FOR EQUIPMENT SUCH AS DUCT COILS.
2. PIPE ALL MULTI-ROW COILS FOR COUNTERFLOW (WATER ENTERS MOST DOWNSTREAM COIL, LEAVES MOST UPSTREAM COIL).
3. REFER TO CONTROLS DRAWINGS FOR ADDITIONAL INFORMATIO.
4. 2-WAY VALVE NORMALLY OPEN FOR HEATING AND NORMALLY CLOSED FOR COOLING.

## 2-WAY COIL PIPING DIAGRAM
NO SCALE

-

TAB Associates
The Architectural Balance
0056 Edwards Village Blvd. Suite 210
Edwards, CO 8132
(970) 766-1470
fax: (970) 766-1471
email: tab@vail.net
www.tabassociates.com

# STRAWBERRY PARK ELEMENTARY
# 39620 AMETHYST DRIVE
Steamboat Springs, CO

| Revisions: | | |
|---|---|---|
| No | Description | Date |

Issue Dates:
PERMIT SET
04.06.2020

Sheet Title:
MECHANICAL DIAGRAMS

BG BUILDINGWORKS
systems fulfilled
303.278.3820 www.bgbuildingworks.com
Project No. 10182.00
Copyright 2020
ALBUQUERQUE | AVON | DENVER | FORT COLLINS

Project No:
10182.00

Sheet No:
M4.1

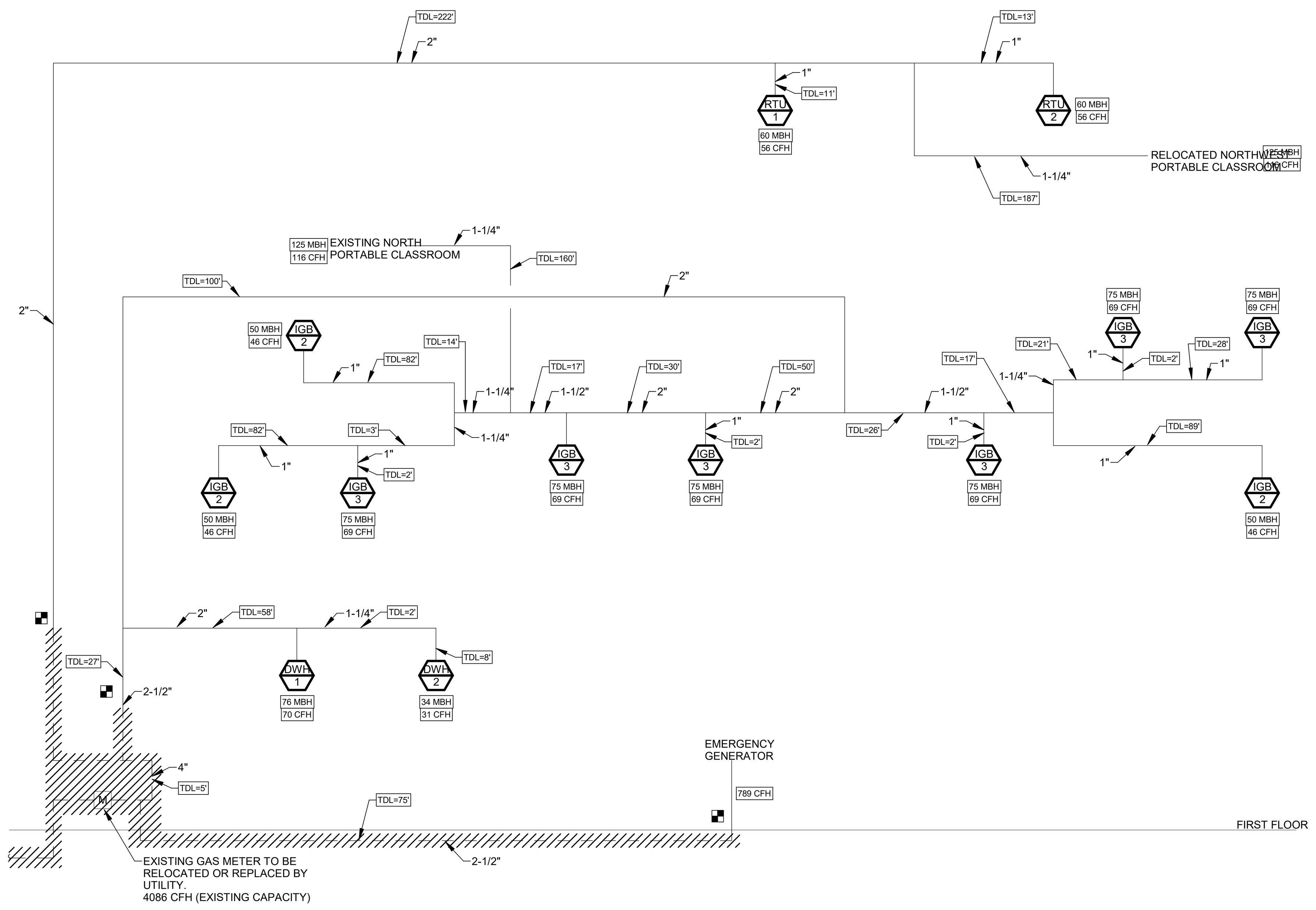


## 2 GAS PIPING DEMO DIAGRAM

SCALE: 1/8" = 1'-0"

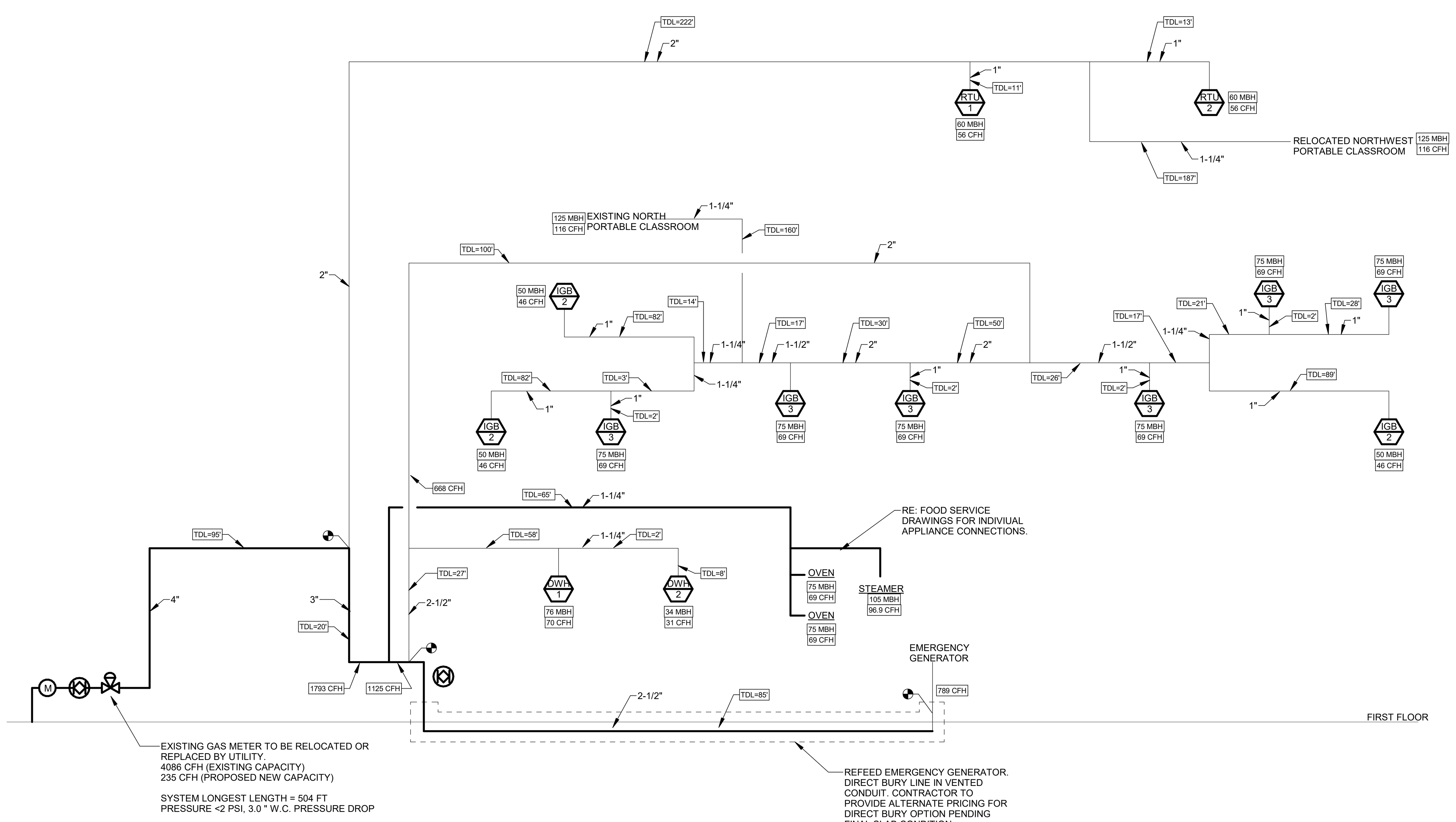


## 3 GAS PIPING PROPOSED DIAGRAM

SCALE: 1/8" = 1'-0"

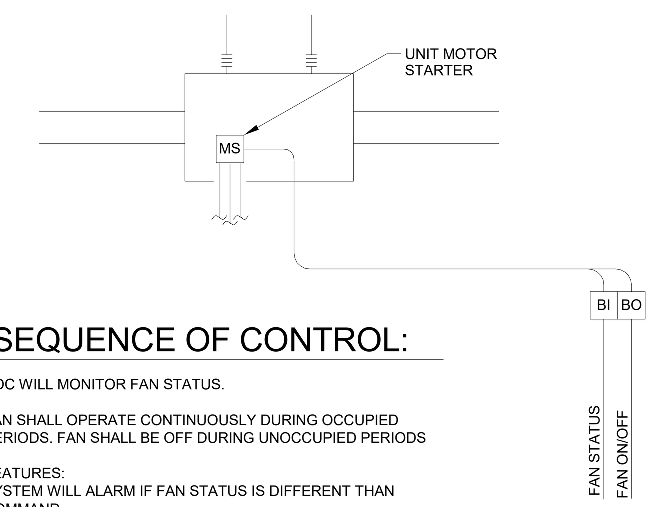


### SEQUENCE OF CONTROL:

DDC WILL MONITOR FAN STATUS.

FAN SHALL OPERATE CONTINUOUSLY DURING OCCUPIED PERIODS. FAN SHALL BE OFF DURING UNOCCUPIED PERIODS

FEATURES:
SYSTEM WILL ALARM IF FAN STATUS IS DIFFERENT THAN COMMAND.

## 5 EF-2 - PRE-K RESTROOM AND KITCHEN EXHAUST CONTROL DIAGRAM

SCALE: NONE

## CONTROLS GENERAL NOTES:

1. CONTROLS CONTRACTOR TO COVER ALL COSTS OF ELECTRICAL POWER REQUIREMENTS, IF ANY, AND LINE VOLTAGE WIRING, IF ANY, BY LICENSED ELECTRICIAN.
2. SEQUENCES OF OPERATION DEFINED HEREIN DESCRIBE GENERAL INTENT AND DO NOT INCLUDE ALL NECESSARY PROCEDURES/STEPS REQUIRED. ANTICIPATE FINE TUNING OF SEQUENCES (INCLUDING, BUT NOT LIMITED TO, SETPOINT ADJUSTMENTS, DEADBAND REFINEMENT, RESET CURVES ENDPOINTS, TIME DELAYS OFFSETS, AND ACTUAL SEQUENCING OF EQUIPMENT), MAY BE REQUIRED AND SHALL BE PERFORMED AS REQUIRED DURING FUNCTIONAL PERFORMANCE TESTING OF THE SYSTEMS. CONTROLS CONTRACTOR SHALL BE RESPONSIBLE TO MAKE ANY AND ALL FINE TUNING ADJUSTMENTS TO PROVIDE A COMPLETE AND OPERABLE SYSTEM.
3. CONTROLS SHALL BE FIELD INSTALLED. CONTROLS CONTRACTOR SHALL BE RESPONSIBLE FOR WIRING AND INSTALLING ALL DEVICES REQUIRED FOR A FULLY FUNCTIONAL CONTROL SYSTEM FOR THIS PROJECT, REGARDLESS OF VOLTAGE. IF THE CONTRACTOR CANNOT SELF-PERFORM WORK REQUIRING LINE VOLTAGE THEN THE CONTRACTOR SHALL COORDINATE WITH AND COMPENSATE THE ELECTRICAL CONTRACTOR AS REQUIRED. CONTROLS CONTRACTOR SHALL COORDINATE WITH EQUIPMENT SUPPLIERS TO ENSURE THAT ALL DEVICES ARE COMPATIBLE WITH THE EXISTING CONTROLS SYSTEM AND EXISTING MECHANICAL EQUIPMENT.
4. ALL CONTROL WIRING TO BE INSTALLED IN PLENUM RATED CONDUIT.
5. NO NETWORKED CONTROL POINTS ARE ALLOWED. ALL SENSORS TO BE HARDWIRED DIRECTLY TO CONTROLLING MODULE.
6. DESCRIPTION - THE BUILDING CONTROL SYSTEM (BCS) SHALL CONSIST OF AN ASHRAE STANDARD 135 COMPLIANT (BACNET COMPATIBLE) DEVICES AND PROTOCOL FOR CONTROL OF HVAC & PLUMBING SYSTEMS. MAJOR COMPONENTS, INCLUDING BOILERS, PUMPS, RTU'S, VAV BOXES, FAN POWERED BOXES, VFDS, WATER HEATERS, AND COMPUTER ROOM COOLING SYSTEMS SHALL BE PROVIDED BY MANUFACTURER WITH BACNET COMPATIBLE CONTROLLERS WITH ALL AVAILABLE INFORMATION WITHIN COMMUNICATED TO AND GRAPHICALLY REPRESENTED IN THE BCS.
7. REMOTE ACCESS - PROVIDE REMOTE ACCESS VIA WEB BASED INTERFACE (WEB ACCESS ITSELF IS NOT PART OF THIS CONTRACT).
8. BUILDING OCCUPANCY - IN ADDITION TO THE OCCUPANCY SCHEDULING FEATURES AVAILABLE THROUGH THE BCS SOFTWARE, PROVIDE MANUAL CONTROLLABILITY OF OCCUPANCY STATUS. MANUAL CONTROL OF OCCUPANCY STATUS SHALL BE ADJUSTABLE THROUGH THE OPERATOR INTERFACE. MANUAL OCCUPANCY OVERRIDE DURATION SHALL BE ADJUSTABLE.
9. GRAPHICS - ALL BCS POINTS SHALL BE REPRESENTED BY GRAPHIC DISPLAY ON THE WEB BASED INTERFACE. ITEMS SUCH AS PUMPS, FANS, CONTROL VALVES, AND DAMPER MOTORS SHALL BE REPRESENTED BY GRAPHIC DISPLAYS. GRAPHICAL FLOOR PLANS SHALL INDICATE ANIMATED ZONE DESIGNATIONS AS WELL AS THEIR SPACE TEMPERATURE SETPOINT, SPACE TEMPERATURE, AND MODE OF OPERATION "HEATING," "COOLING" OR "INACTIVE". BACKGROUND COLOR OF ZONES SHALL BE CHANGED AS FOLLOWS: GREEN - SPACE TEMPERATURE WITHIN 3°F OF SETPOINT; RED - SPACE TEMPERATURE GREATER THAN 3°F ABOVE SETPOINT; BLUE -SPACE TEMPERATURE LOWER THAN 3°F BELOW SETPOINT.
10. GRAPHICAL FLOOR PLANS SHALL ALSO INDICATE CENTRALIZED PLANT EQUIPMENT, VAV'S, AHU'S, RTU'S, AND DISTRIBUTED IT ROOM COOLING SYSTEM BY LOCATION. ANIMATED GRAPHICS ARE NOT REQUIRED ON THE GRAPHICAL FLOOR PLAN SCREEN. ADDITIONAL INFORMATION FOR THE EQUIPMENT INDICATED ON THE GRAPHICAL FLOOR PLANS SHALL BE EASILY ACCESSED BY DOUBLE-CLICKING THE ASSOCIATED FLOOR PLAN GRAPHIC. ADDITIONAL INFORMATION FOR THE CENTRAL PLANT AS A WHOLE SHALL BE ACCESSIBLE IN THE SAME MANNER.
11. LOCATIONS SHOWN ON DRAWINGS ARE APPROXIMATE LOCATIONS ONLY. INDICATE EXACT LOCATION OF ALL DEVICES IN THE FIELD WITH CLEARLY MARKED IDENTIFIERS AND OBTAIN ARCHITECT'S AND ENGINEER'S APPROVAL PRIOR TO ROUTING CONDUIT AND PULLING WIRE.
12. VARIABLE FREQUENCY DRIVES (VFDS) TO BE PROVIDED WITH BACNET COMPATIBLE INTERFACE TO MONITOR CURRENT VFD STATUS AND OPERATING CONDITIONS THROUGH ITS COMMUNICATION PORT.
13. ALARMS - PROVIDE THE FOLLOWING SPECIFIC DIAL-OUT ALARMS TO DESTINATION DETERMINED BY THE OWNER: SPACE TEMPERATURE LOW LIMIT; IT (MDF & IDFS) ROOM TEMPERATURE HIGH LIMIT; GENERALIZED EQUIPMENT FAILURE ALARM (FOR EQUIPMENT SUCH AS PUMPS, WATER HEATERS, RTU'S, ERVS, VFDS, ETC)
14. ADJUSTABILITY - WITH THE EXCEPTION OF DESIGN TEMPERATURES, ALL SETPOINTS, TIME DELAYS, DURATIONS, RESET SCHEDULES, AND OTHER CONTROL VARIABLES SHALL BE ADJUSTABLE. VARIABLES REQUIRED FOR CONTROLS IMPLEMENTATION THAT ARE NOT DEFINED IN THE SEQUENCES OF CONTROL SHALL BE DEFINED BY CONTROLS CONTRACTOR IN THEIR SHOP DRAWING SUBMITTAL. CONTRACTOR'S SUGGESTED ADJUSTMENTS TO VARIABLES DEFINED IN THE SEQUENCES OF CONTROL, IF ANY, SHALL BE SUBMITTED IN THE CONTROLS DRAWINGS.
15. RESET CURVE GRAPHICS - CERTAIN CONTROLS SEQUENCES IN THIS DRAWING SET CONTAIN RESET CURVES DESCRIPTIONS THAT ARE PROVIDED GRAPHICALLY. THOUGH THESE CURVES REPRESENT PROPORTIONAL CONTROL ONLY IN THE SIMPLEST INTERPRETATION, THE CONTROLS SYSTEM INTENT IS TO UTILIZE PROPORTIONAL-INTEGRAL (PI) AND/OR PROPORTIONAL-INTEGRAL-DERIVATIVE (PID) LOOPS TO PERMIT TUNING OF CONTROLS SYSTEMS RESPONSE, LIMIT OVERSHOOT/UNDERSHOOT, AND IMPROVE SYSTEM STABILITY. RESET CURVE GRAPHICS ARE PROVIDED AS SUGGESTED STARTING POINTS FOR THE PROPORTIONAL COMPONENT ONLY; ALL ENDPOINTS, OFFSETS, SLOPES, ETC ARE FLEXIBLE.
16. CONTROLS RECORD DRAWINGS REQUIRED - CONTRACTOR SHALL MAINTAIN, THROUGH THE COURSE OF THE PROJECT, A COMPREHENSIVE RECORD OF MECHANICAL EQUIPMENT AND CONTROLS RELATED ADDENDA (ASI'S, RFI'S, AND CCD'S), ADJUSTMENTS TO SETPOINTS DEFINED HEREIN, INITIAL SETPOINTS NOT DEFINED HEREIN. ANY SUGGESTIONS FOR ADJUSTMENTS AND/OR MODIFICATION TO THE APPROVED CONTROL SHOP DRAWINGS THAT ARISE DURING THE COURSE OF CONSTRUCTION, STARTUP, AND COMMISSIONING SHALL BE REVIEWED BY THE ENGINEER. APPROVED CHANGES SHALL BE RECORDED ON THE CONTROLS SHOP DRAWINGS BEING USED AS CONTROLS RECORD DRAWINGS. ALL SUCH CHANGES SHALL BE UPDATED ELECTRONICALLY AND SUBMITTED TO THE OWNER DURING PROJECT CLOSEOUT.
17. TRENDING INTERVALS AND STORAGE CAPACITY TO MATCH EXISTING BAS SYSTEM.
18. POINTS LISTS - CONTROLS DRAWING SUBMITTAL SHALL PROVIDE COMPLETE POINTS LISTS AND NAME/ADDRESS OF EACH POINT OCCURRENCE WITHIN THE PROJECT.
19. SPARE CAPACITY - PROVIDE SYSTEM ARCHITECTURE/INFRASTRUCTURE WITH MINIMUM 10% SPARE CAPACITY FOR FUTURE ADDITIONAL POINTS EVENLY DISTRIBUTED ACROSS THE FACILITY.

RCRBD Record Set
T.A.
05/14/2020

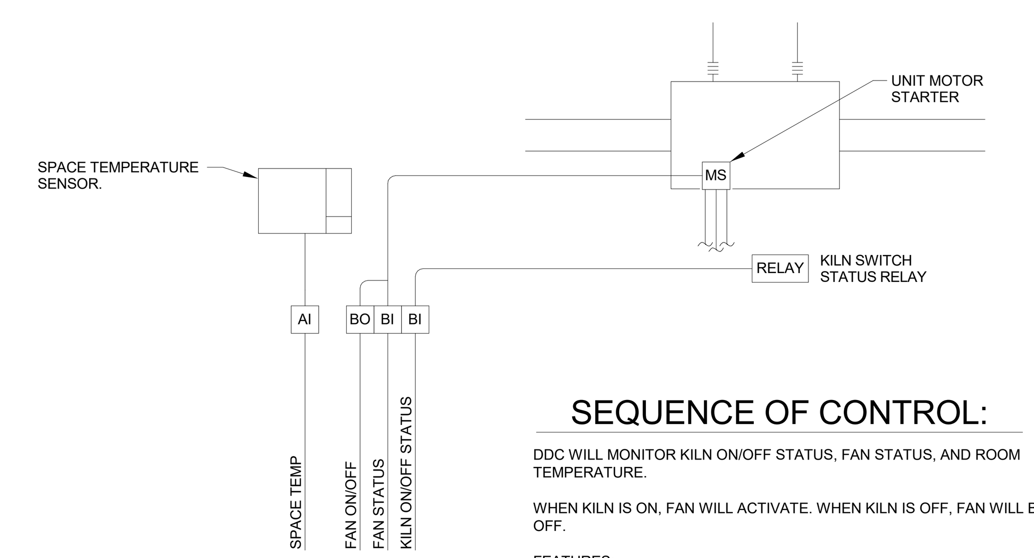


### SEQUENCE OF CONTROL:

DDC WILL MONITOR KILN ON/OFF STATUS, FAN STATUS, AND ROOM TEMPERATURE.

WHEN KILN IS ON, FAN WILL ACTIVATE. WHEN KILN IS OFF, FAN WILL BE OFF.

FEATURES:

PROVIDE ALARM IF FAN STATUS IS DIFFERENT THAN COMMAND.
PROVIDE ALARM IF ROOM TEMPERATURE IS OUT OF RANGE.
TREND SPACE TEMPERATURE.

## 2 EF-3 - KILN ROOM EXHAUST FAN CONTROL DIAGRAM

SCALE: NONE

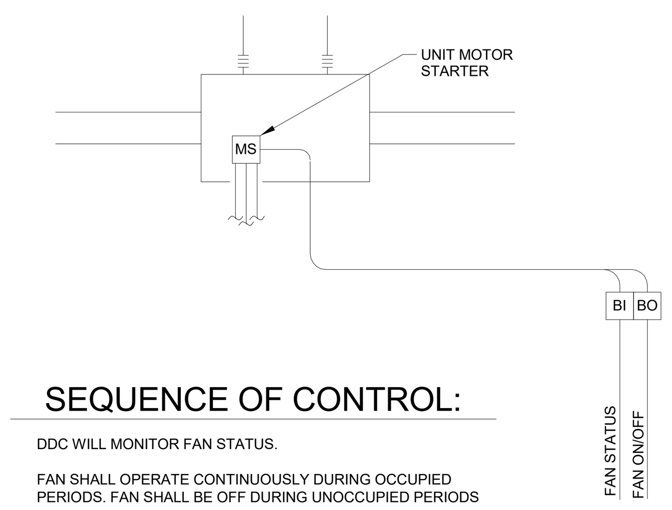


### SEQUENCE OF CONTROL:

DDC WILL MONITOR FAN STATUS.

FAN SHALL OPERATE CONTINUOUSLY DURING OCCUPIED PERIODS. FAN SHALL BE OFF DURING UNOCCUPIED PERIODS

FEATURES:
SYSTEM WILL ALARM IF FAN STATUS IS DIFFERENT THAN COMMAND.

## 1 EF-1 - ART ROOM EXHAUST CONTROL DIAGRAM

SCALE: NONE

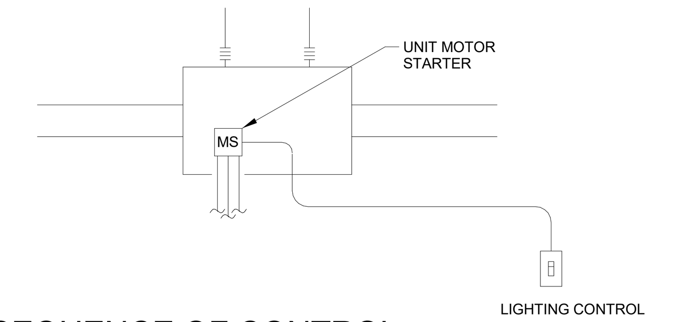


### SEQUENCE OF CONTROL:

EXHAUST FAN SYSTEM TO BE INDEPENDENT OF DDC CONTROL..

FAN SHALL BE INTERLOCKED TO RUN WITH RESTROOM LIGHTING CONTROL. WHEN LIGHTING IS ON, FAN WILL RUN. WHEN LIGHTING IS OFF, FAN WILL BE OFF.

## 4 EF-4 - SPED RESTROOM EXHAUST CONTROL DIAGRAM

SCALE: NONE

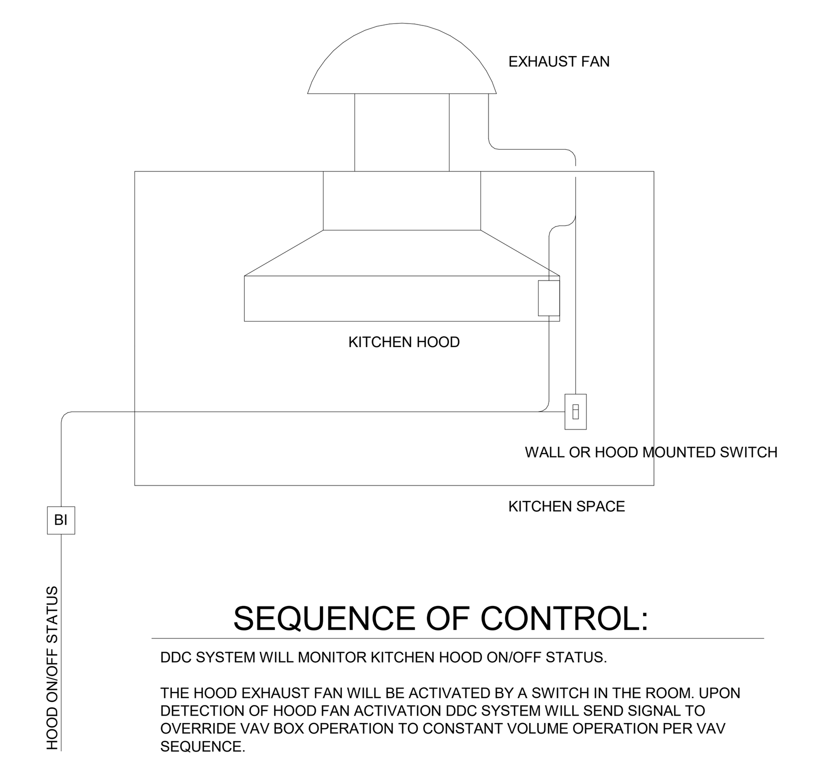


### SEQUENCE OF CONTROL:

DDC SYSTEM WILL MONITOR KITCHEN HOOD ON/OFF STATUS.

THE HOOD EXHAUST FAN WILL BE ACTIVATED BY A SWITCH IN THE ROOM. UPON DETECTION OF HOOD FAN ACTIVATION DDC SYSTEM WILL SEND SIGNAL TO OVERRIDE VAV BOX OPERATION TO CONSTANT VOLUME OPERATION PER VAV SEQUENCE.

## 3 KEF-1 AND KEF-2 - KITCHEN HOOD EXHAUST CONTROL DIAGRAM

SCALE: NONE


BG BUILDINGWORKS
systems fulfilled
303.278.3820 www.bgbuildingworks.com
Project No. 10182.00 Copyright 2020
ALBUQUERQUE | AVON | DENVER | FORT COLLINS



TAB Associates
*The Architectural Balance*
0056 Edwards Village Blvd.
Suite 210
Edwards, CO 8132
(970) 766-1470
fax: (970) 766-1471
email: tab@vail.net
www.tabassociates.com


COLORADO REGISTERED PROFESSIONAL ENGINEER DAVID A. LYLE 34666 4/6/2020

# STRAWBERRY PARK ELEMENTARY
# 39620 AMETHYST DRIVE
## Steamboat Springs, CO

Revisions:

| No | Description | Date |
|---|---|---|
| | | |

Issue Dates:
PERMIT SET
04.06.2020

Sheet Title:
MECHANICAL DIAGRAMS

Project No:
10182.00

Sheet No:
M4.2

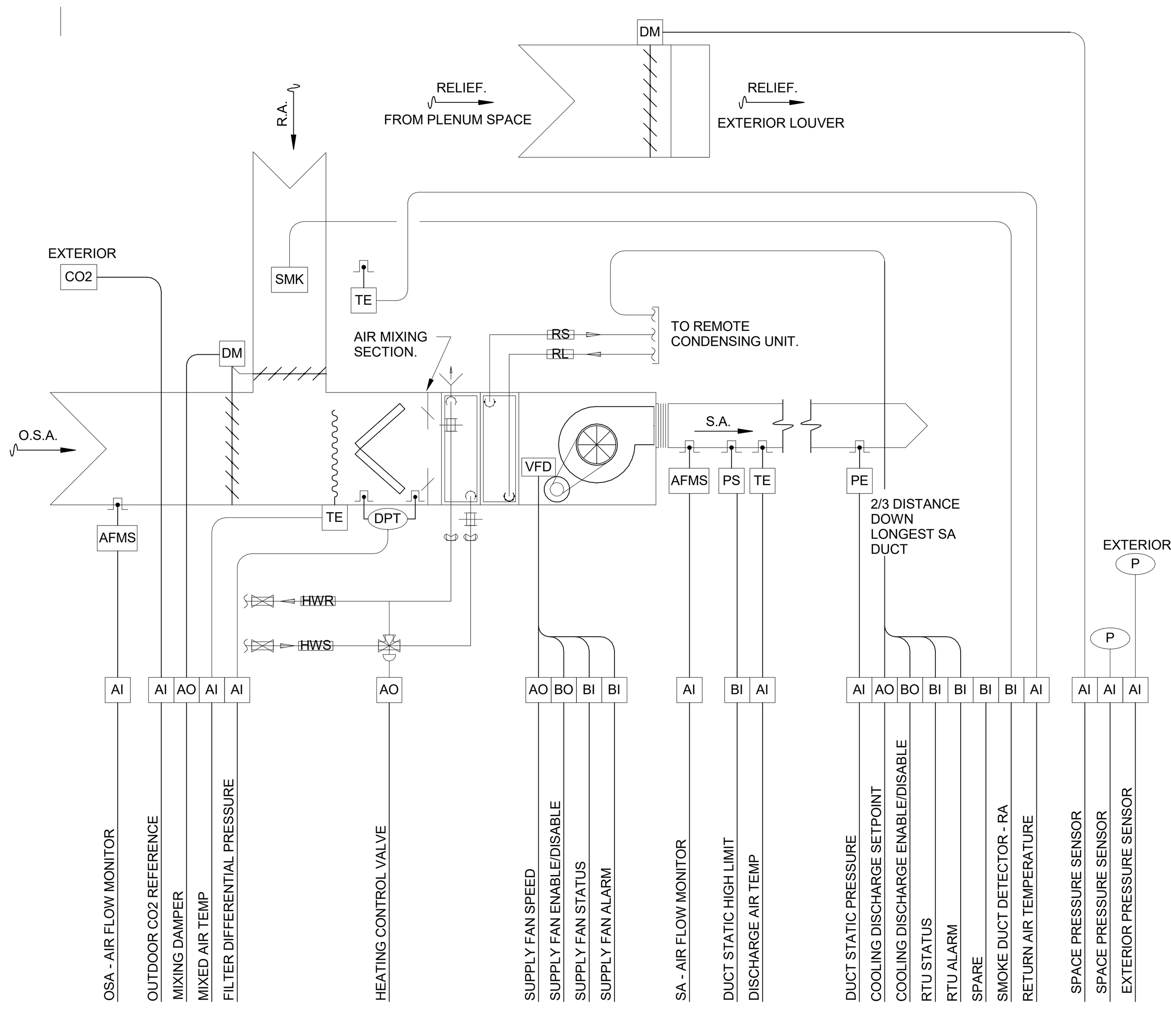


**CONTROLS POINTS LIST**

AIR HANDLER UNIT CONTROLS

| POINT DESCRIPTION- | | | ANALOG | | | | | | | | | | BINARY | | | | | | | | | | | | | | | | SYSTEM FEATURE | | | | | | | | | | | |
|---|---|---|---|---|---|---|---|---|---|---|---|---|---|---|---|---|---|---|---|---|---|---|---|---|---|---|---|---|---|---|---|---|---|---|---|---|---|---|---|---|
| | | | INPUT | | | | | | | | | OUTPUT | INPUT | | | | | | | OUTPUT | | | | | | | | | ALARMS | | | | | PROGRAMS | | | | | | |
| | GRAPHIC SCREEN | ANIMATED POINT ON GRAPHIC | TEMPERATURE | PRESSURE | RELATIVE HUMIDITY | CO2 - OUTSIDE AIR REFERENCE | AFMS - OSA | AFMS - SA | GPM | PERCENT | CFM | DDC (4-20 ma, 0-10 vdc) | STATUS | STATUS ON/OFF | FILTER STATUS | STATUS OPEN/CLSD. | TIMED OVERRIDE | HEAT/COOL | ALARM | STOP/START | OPEN/CLOSED | LOCK OUT | ENABLE/DISABLE | HIGH/LOW SPEED | FLOATING CONTROL | OCCUPIED/UNOCC | FAULT RESET | HEAT/COOL. | HIGH OR LOW VALUE | OUT OF RANGE | STATUS DIFF. FROM CMD | FREEZESTAT | ALARM | TREND VALUE | TREND STATUS | LEAD/LAG | ROTATIONALLY SEQUNCE | CRITICAL VALVE RESET | ITEMIZED FAULT CODE | PERIODIC HEAT TREATMENT |
| RELIEF DAMPER POSITION | X | | | | | | | | | X | | X | | | | | | | | | | | | | | | | | | | | | X | | X | | | | | |
| MIXING DAMPER POSITION | X | | | | | | | | | X | | X | | | | | | | | | | | | | | | | | | | | | | | X | | | | | |
| MIXED AIR TEMPERATURE | X | | X | | | | | | | | | | | | | | | | | | | | | | | | | | X | X | | | | X | | | | | | |
| FILTER DIFFERENTIAL PRESSURE | X | | | X | | | | | | | | | | | | | | | | | | | | | | | | | | | | | X | X | | | | | | |
| CO2 - OUTDOOR REFERENCE | X | | | | | X | | | | | | | | | | | | | | | | | | | | | | | | | | | | | | | | | | |
| HEATING CONTROL VALVE | X | | | | | | | | | X | | X | | | | | | | | | | | | | | | | | | | | | | X | X | | | | | |
| SUPPLY FAN SPEED | X | | | | | | | | | | | X | | | | | | | | | | | | | | | | | | | | | | | | | | | | |
| SUPPLY FAN ENABLE/DISABLE | X | | | | | | | | | | | | | | | | | | | | | | X | | | | | | | | | | | | | | | | | |
| SUPPLY FAN STATUS | X | X | | | | | | | | | | | X | | | | | | | | | | | | | | | | | | X | | | | | | | | | |
| SUPPLY FAN ALARM | X | | | | | | | | | | | | | | | | | | X | | | | | | | | | | | | | | X | | | | | | | |
| DUCT STATIC HIGH LIMIT | X | | | | | | | | | | | | | | | | | | X | | | | | | | | | | | | | | X | | | | | | | |
| DISCHARGE AIR TEMPERATURE | X | | X | | | | | | | | | | | | | | | | | | | | | | | | | | X | X | | | | X | | | | | | |
| AFMS - OSA | X | | | | | | X | | | | | | | | | | | | | | | | | | | | | | | | | | | | | | | | | |
| DUCT STATIC PRESSURE | X | | | X | | | | | | | | | | | | | | | | | | | | | | | | | | | | | | X | | | | | | |
| COOLING DISCHARGE SETPOINT | X | | | | | | | | | | | X | | | | | | | | | | | | | | | | | | | | | | | | | | | | |
| COOLING ENABLE/DISABLE | X | | | | | | | | | | | | | | | | | | | | | | X | | | | | | | | | | | | | | | | | |
| AHU STATUS | X | X | | | | | | | | | | | X | | | | | | | | | | | | | | | | | | X | | | | | | | | | |
| SMOKE DETECTOR | X | | | | | | | | | | | | | | | | | | X | | | | | | | | | | | | | | X | | | | | | | |
| RETURN AIR TEMPERATURE | X | | X | | | | | | | | | | | | | | | | | | | | | | | | | | X | X | | | | X | | | | | | |
| AFMS - SA | X | | | | | | | X | | | | | | | | | | | | | | | | | | | | | | | | | | | | | | | | |
| SPACE PRESSURE | X | | | X | | | | | | | | | | | | | | | | | | | | | | | | | X | X | | | | X | | | | | | |
| OUTDOOR PRESSURE | X | | | X | | | | | | | | | | | | | | | | | | | | | | | | | X | X | | | | X | | | | | | |

GENERAL NOTES:

DUPLICATE POINTS MAY EXIST. REFER TO FLOW DIAGRAMS AND PLANS FOR QUANTITIES.

3 AIR HANDLING UNIT AND CONDENSING UNIT CONTROL DIAGRAM

SCALE: NONE

# SEQUENCE OF CONTROL

DESCRIPTION - THE SYSTEM CONSISTS OF A NEW AIR HANDLING UNIT COMPLETE WITH MIXING BOX, AIR BLENDER, FILTER SECTION, HOT WATER COIL, DX COIL, SUPPLY FAN WITH VFD, AND REMOTE DX CONDENSING UNIT. DAMPERS, CONTROL VALVES, AND THEIR ACTUATORS, AS WELL AS ALL OTHER CONTROLS REQUIRED SHALL BE NEW EQUIPMENT FURNISHED AND INSTALLED BY THE TEMPERATURE CONTROLS CONTRACTOR. DX CONDENSING UNIT EQUIPMENT CONTROLS SHALL BE INSTALLED BY EQUIPMENT MANUFACTURER WITH HARDWIRED MONITORING AND CONTROL POINTS AVAILABLE AS SHOWN.

SCHEDULING - THE AIR HANDLING UNIT SHALL BE SCHEDULED IN EITHER OCCUPIED OR UNOCCUPIED MODE BASED ON PROGRAM SCHEDULE, FEEDBACK STATUS FROM THE RESPECTIVE TERMINAL BOX ZONES SERVED BY THE AHU, AND OPERATIONAL STATUS OF KITCHEN EXHAUST FANS. WHEN ALL RESPECTIVE ZONES SERVED ARE IN UNOCCUPIED MODE, AND KITCHEN EXHAUST FANS ARE OFF, THE AHU OPERATIONAL MODE SHALL BE UNOCCUPIED. WHEN ANY OF THE RESPECTIVE ZONES ARE IN OCCUPIED MODE, OR EITHER KITCHEN EXHAUST FAN IS ON, THE AHU OPERATIONAL MODE SHALL BE OCCUPIED. WHEN IN OCCUPIED MODE, SUPPLY FAN SHALL OPERATE AND CONTROLLED DEVICES SHALL POSITION WITH RESPECT TO THEIR PI CONTROL LOOP. WHEN IN UNOCCUPIED MODE, FAN SHALL BE OFF, RETURN DAMPER FULLY OPEN, OUTSIDE AIR DAMPER FULLY CLOSED, HOT WATER VALVE 10% (ADJUSTABLE) OPEN TO COIL, AND DX COOLING SYSTEM DISABLED.

MORNING WARM-UP: SHALL BE SCHEDULED TO OCCUR PRIOR TO SCHEDULED OCCUPANCY. PROVIDE ADJUSTABLE DURATION TO PERMIT BUILDING OPERATOR TO TUNE TIME PERIOD REQUIRED TO FULLY EXECUTE WARM-UP EXERCISE PRIOR TO OCCUPANCY. DURING MORNING WARM-UP, FIRST ALL VAV BOXES SHALL OPEN UP TO 100% OF BALANCED MAXIMUM COOLING CFM, AND VAV HEATING COIL CONTROL VALVES WILL BE CLOSED. AFTER A 3 MINUTE (ADJUSTABLE) DELAY THE SUPPLY FAN SHALL START AND THE VFD SHALL MODULATE TO MAINTAIN THE MAXIMUM DUCT STATIC PRESSURE SETPOINT (AS DETERMINED BY BALANCE CONTRACTOR) PLUS 0.10'' WC. AHU SHALL SUPPLY 85°F (ADJ) DAT, OSA DAMPER SHALL BE CLOSED, RA DAMPER SHALL BE OPEN. AS EACH ZONE REACHES OCCUPIED SETPOINT, ASSOCIATED VAV BOX WILL RETURN TO NORMAL OCCUPIED OPERATION. ONCE ALL ZONES REACH OCCUPIED SETPOINT, THE AHU WILL RETURN TO NORMAL OCCUPIED OPERATION.

MORNING COOL-DOWN: SHALL BE BASED UPON TREND DATA COLLECTED OVER THE PREVIOUS 7 DAYS (ADJ) TO DETERMINE WHETHER OR NOT MORNING COOL-DOWN IS WARRANTED. MORNING COOL DOWN SHALL BE DEEMED WARRANTED IF EITHER OF THE FOLLOWING CONDITIONS ARE MET:

1. DEMAND FOR COOLING OCCURRED ON THE MAJORITY OF THE DAYS IN PREVIOUS PERIOD POLLED.
2. DAILY MAXIMUM OUTSIDE AIR TEMPERATURE EXCEEDED SPACE TEMPERATURE SETPOINT FOR A MAJORITY OF THE DAYS THE IN PREVIOUS PERIOD POLLED.

WHEN DEEMED WARRANTED, MORNING COOL-DOWN SHALL BE EXECUTED IN LIEU OF MORNING WARM-UP ROUTINE. THE COOL-DOWN ROUTINE SHALL BE SCHEDULED TO OCCUR PRIOR TO SCHEDULED OCCUPANCY. PROVIDE ADJUSTABLE DURATION TO PERMIT BUILDING OPERATOR TO TUNE TIME PERIOD REQUIRED TO FULLY EXECUTE COOL-DOWN EXERCISE PRIOR TO OCCUPANCY. DURING MORNING COOL-DOWN, FIRST ALL VAV BOXES SHALL OPEN TO 100% OF BALANCED MAXIMUM CFM, AFTER A 3 MINUTE DELAY (ADJ), THE SUPPLY FAN VFD SHALL START AND MODULATE TO MAINTAIN MAINTAIN THE MAXIMUM DUCT STATIC PRESSURE SETPOINT (AS DETERMINED BY BALANCE CONTRACTOR) PLUS 0.10" WC. DURING COOL-DOWN AHU SHALL MODULATE MIXING BOX POSITION TO ACHIEVE COOLING DISCHARGE AIR TEMPERATURE SETPOINT OF 55°F (ADJ). AS VAV ZONES REACH THEIR RESPECTIVE MORNING COOLDOWN SETPOINTS, ASSOCIATED VAV BOX WILL RETURN TO NORMAL OCCUPIED OPERATION. ONCE ALL ZONED REACH OCCUPIED SETPOINT, THE AHU WILL RETURN TO NORMAL OCCUPIED OPERATION.

MIXED AIR CONTROL: MIXING BOX CONTROL IS CONTROLLED BY MULTIPLE CONTROL LOOPS. BCS SHALL HIGH SELECT CONTROL POSITION AMONGST THE FOLLOWING LOOPS:

OCCUPIED/UNOCCUPIED: DAMPER CLOSED WHILE UNOCCUPIED AND OPEN TO MINIMUM POSITION WHILE OCCUPIED. MINIMUM OUTSIDE AIR POSITIONS SHALL BE BASED ON DCV CALCULATION AND KITCHEN EXHAUST OPERATION.

MIXED AIR TEMPERATURE CONTROL LOOP: WHEN OUTSIDE AIR TEMPERATURE FALLS BELOW DISCHARGE AIR SETPOINT BY 1 DEGREE, MIXING DAMPERS SHALL MODULATE TO MAINTAIN DISCHARGE AIR TEMPERATURE AT SETPOINT.

ECONOMIZER CONTROL LOOP: OPEN OUTSIDE AIR DAMPER, CLOSE RETURN AIR DAMPER, AND OPEN RELIEF DAMPER (WHERE APPLICABLE), DURING ECONOMIZER MODE. COOLING IS VIA ECONOMIZER MODE ONLY, DISABLE ECONOMIZER COOLING WHEN OUTSIDE AIR TEMPERATURES ARE GREATER THAN INDOOR SPACE TEMPERATURE SETPOINT.

DISCHARGE AIR TEMPERATURE (DAT) CONTROL: DAT SETPOINT SHALL BE BASED ON O.S.A. TEMP RESET SCHEDULE BELOW.

MODULATE MIXING BOX POSITION TO MAINTAIN DAT AT SETPOINT DURING ECONOMIZER COOLING. IF THE OSA DAMPERS ARE AT MINIMUM POSITION AND THE MIXED AIR TEMPERATURE IS BELOW DAT SETPOINT, MODULATE HEATING WATER VALVE TO MAINTAIN DAT AT SETPOINT. IF OSA TEMP IS GREATER THAN DAT SETPOINT, MODULATE MIXING DAMPERS TO MINIMUM POSITION. ENABLE DX COOLING SYSTEM FOR AIR HANDLER TO MAINTAIN DAT AT SETPOINT.

SUPPLY FAN CONTROL:
THE SUPPLY FAN VFD SHALL BE MODULATED BASED ON DUCT STATIC PRESSURE FEEDBACK TO MAINTAIN DUCT STATIC PRESSURE AT SETPOINT. EMPLOY CRITICAL VALVE RESET LOGIC TO MAINTAIN THE MOST OPEN PRIMARY AIR VALVE IN THE SYSTEM AT 90% OR GREATER. POLL ALL VALVE POSITIONS TO DETERMINE MOST OPEN (CRITICAL) VALVE. RESET STATIC PRESSURE SETPOINT PER THE SCHEDULE BELOW.

DURING BALANCING/START-UP, CONSULT THE ENGINEER TO DETERMINE WHICH THREE OR FOUR TERMINAL BOXES SHALL BE PROGRAMMED TO REMAIN OPEN UNDER SATISFIED CONDITIONS TO ALLOW FOR A MINIMUM FAN FLOW RATE WITHOUT OVER-PRESSURIZING THE SUPPLY DUCTS.

SPACE PRESSURE CONTROL: RELIEF AIR SHALL BE ACCOMPLISHED WITH A MOTORIZED RELIEF DAMPER DUCTED TO AN EXTERIOR LOUVER. BUILDING PRESSURE SHALL BE MAINTAINED AT 0.02" W.C. (ADJ). MODULATE RELIEF DAMPER AND OSA DAMPER TO MAIN TAIN SET POINT.

DEMAND CONTROL VENTILATION (DCV): DURING OCCUPIED MODE THE BUILDING AUTOMATION SYSTEM WILL MONITOR CARBON MONOXIDE CO2 AT EACH ZONE AND FROM OUTSIDE TO DETERMINE OCCUPANCY LEVELS IN EACH ZONE. BASED ON OCCUPANCY, THE DCV PROGRAM WILL RESET THE VAV BOX MINIMUM VENTILATION CFM TO MAINTAIN CODE REQUIRED VENTILATION TO EACH ZONE. AS VAV BOX MINIMUM CFM'S CHANGE, DCV PROGRAM WILL CALCULATE NEW VENTILATION FRACTION FOR AIR HANDLER UNIT AND RESET OSA CFM.

WHEN KITCHEN EXHAUST FANS ARE IN OPERATION, SYSTEM WILL BE IN OCCUPIED MODE AND OSA CFM WILL BE OVERRIDDEN TO A MINIMUM OF 30% (ADJ).

FEATURES -
1. DISCHARGE AIR TEMPERATURE SHALL BE TRENDED HOURLY.
2. GENERATE AN ALARM SHOULD DISCHARGE AIR TEMPERATURE STRAY FROM DISCHARGE AIR TEMPERATURE SETPOINT BY 5 DEG OR MORE.
3. GENERATE FILTER CHANGE ALARM SHOULD FILTER DIFFERENTIAL PRESSURE EXCEED FILTER CHANGE SETPOINT (ADJUSTABLE AT THE OPERATOR INTERFACE).
4. GENERATE AN ALARM SHOULD ANY FAN STATUS NOT MATCH FAN COMMAND.
5. GENERATE AN ALARM AND OPEN HEATING VALVE TO 100% SHOULD FREEZE STAT TRIP AND DAMPERS SHALL GO TO UNOCCUPIED MODE POSITION.
6. GENERATE AN ALARM SHOULD SMOKE DETECTOR TRIP AND SHUT UNIT DOWN, VALVES AND DAMPERS SHALL GO TO UNOCCUPIED MODE.
7. DISABLE SUPPLY FAN AND GENERATE ALARM SHOULD DUCT HIGH STATIC PRESSURE SWITCH TRIP.
8. HOURLY TREND ITEMS INDICATED IN THE POINTS LIST TO BE TRENDED. STORE DATA FOR 1 YEAR PRIOR TO PURGING.
9. GENERATE ALARMS AS INDICATED IN THE POINTS LIST AND IN THE SEQUENCE OF CONTROL ABOVE.

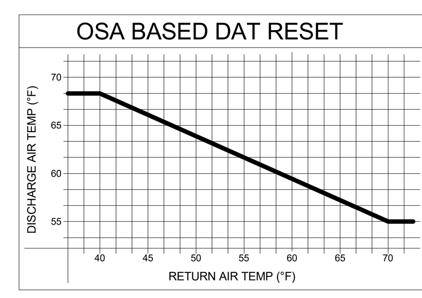


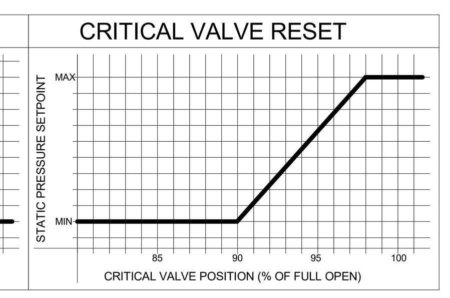


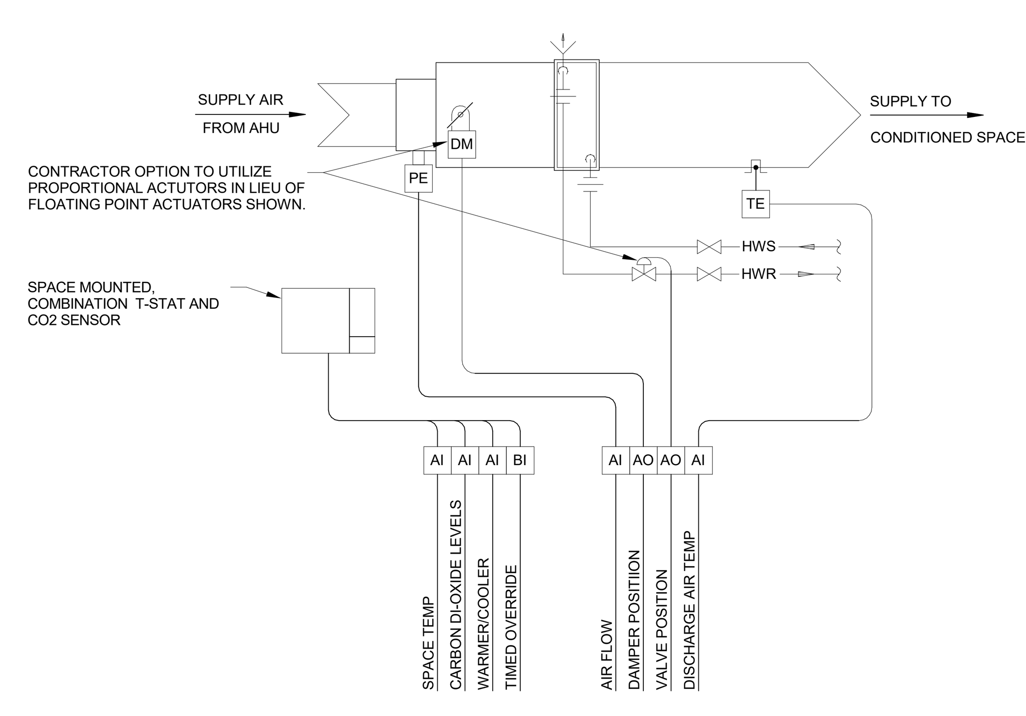


**SYSTEM POINTS LIST -- VAV BOX WITH HW REHEAT**

| SYSTEM POINT DESCRIPTION | | | ANALOG | | | | | | | | | | BINARY | | | | | | | | | | | SYSTEM FEATURE | | | | | | | |
|---|---|---|---|---|---|---|---|---|---|---|---|---|---|---|---|---|---|---|---|---|---|---|---|---|---|---|---|---|---|---|---|
| | | | INPUT | | | | | | | | | OUTPUT | INPUT | | | | | OUTPUT | | | | | | ALARMS | | | PROGRAMS | | | | |
| | GRAPHIC SCREEN | ANIMATED POINT ON GRAPHIC | TEMPERATURE | CARBON DI-OXIDE | RELATIVE HUMIDITY | KW | KWH | BTU HR | GPM | PERCENT | CFM | DDC (4-20 ma, 0-10 vdc) | STATUS | STATUS ON/OFF | FILTER STATUS | STATUS OPEN/CLSD. | TIMED OVERRIDE | STOP/START | OPEN/CLOSED | LOCK OUT | ENABLE/DISABLE | HIGH/LOW SPEED | FLOATING CONTROL | HIGH OR LOW VALUE | OUT OF RANGE | STATUS DIFF. FROM CMD | TREND VALUE | TREND STATUS | LEAD/LAG | ROTATIONALLY SEQUNCE | NOTES |
| SPACE TEMP | X | | X | | | | | | | | | | | | | | | | | | | | | X | | | X | | | | |
| WAMER/COOLER | X | | X | | | | | | | | | | | | | | | | | | | | | | | | | | | | |
| TIMED OVERRIDE | | | | | | | | | | | | | | | | | X | | | | | | | | | | | | | | |
| CO2 LEVEL | X | | | X | | | | | | | | | | | | | | | | | | | | X | | | X | | | | |
| AIRFLOW | X | | | | | | | | | | X | | | | | | | | | | | | | | X | X | X | | | | |
| DAMPER POSITION | X | | | | | | | | | | | X | | | | | | | | | | | | | | X | X | | | | |
| VALVE POSITION | X | | | | | | | | | | | X | | | | | | | | | | | | | | X | X | | | | |
| DISCHG AIR TEMP | X | | X | | | | | | | | | | | | | | | | | | | | | X | X | | X | | | | |
| GENERAL NOTES: | | | | | | | | | | | | | | | | | | | | | | | | | | | | | | | |

1 CLASSROOM VAV w/ REHEAT CONTROL DIAGRAM

SCALE: NONE

# SEQUENCE OF CONTROL:

DESCRIPTION - THE NEW SYSTEMS CONSIST OF A PRESSURE INDEPENDENT VARIABLE AIR VOLUME BOX COMPLETE WITH MOTORIZED DAMPER, HOT WATER REHEAT COIL, FLOATING POINT OR PROPORTIONAL CONTROL VALVE, AND AIR FLOW PRESSURE TRANSDUCER.

SCHEDULING - OCCUPIED/UNOCUPIED SCHEDULING APPLIES TO THESE SYSTEMS. SCHEDULES TO BE DETERMINED BY OWNER AND SHALL BE AVAILABLE THROUGH THE OPERATOR WORKSTATION INTERFACE.

SCHEDULING CONTROLS SPACE SETPOINT TEMPERATURE. DURING OCCUPIED MODE, TERMINAL UNIT SHALL MAINTAIN SPACE TEMPERATURE AT SETPOINT DICTATED BY SPACE MOUNTED THERMOSTAT (I.E. 68-72°F HEATING, 76-80°F COOLING). DURING UNOCCUPIED MODE, TERMINAL UNIT SHALL MAINTAIN SPACE TEMPERATURE AT SETBACK TEMPERATURE SETPOINT (I.E. 60°F HEATING, N/A COOLING)

OCCUPIED/UNOCCUPIED SCHEDULING ALSO CONTROLS VENTILATION. WHEN SCHEDULED IN THE OCCUPIED MODE, TERMINAL UNIT SHALL PROVIDE MINIMUM VENTILATION CFM CALCULATED BY THE DEMAND CONTROL VENTILATION PROGRAM. WHEN SCHEDULED IN THE UNOCCUPIED MODE, DAMPER SHALL BE SHUT. TERMINAL BOX SHALL BE PERMITTED TO OPEN AS REQUIRED ON DEMAND FOR HEATING ONLY, DURING UNOCCUPIED PERIODS.

TIMED OVERRIDE - SHOULD THE TIMED OVERRIDE BE SWITCHED TO OCCUPIED DURING UNOCCUPIED MODE, OCCUPIED MODE OPERATION SHALL APPLY FOR THE TIMED OCCUPANCY DURATION.

CONTROL - THE AIRFLOW PRESSURE TRANSDUCER SHALL INDICATE TO THE UNIT MOUNTED DDC CONTROLLER MEASURED AIRFLOW. THE DDC CONTROLLER SHALL MODULATE THE VAV BOX DAMPER TO MAINTAIN AIRFLOW AT SETPOINT. AIRFLOW SETPOINT AND REHEAT VALVE SHALL BE MODULATED BASED ON SPACE TEMPERATURE DEVIATION FROM SETPOINT PER THE SAMPLE RESET SCHEDULES BELOW INDICATING DEADBAND, HEATING AND COOLING RAMP-UP RANGES, AND MINIMUM AIRFLOWS.

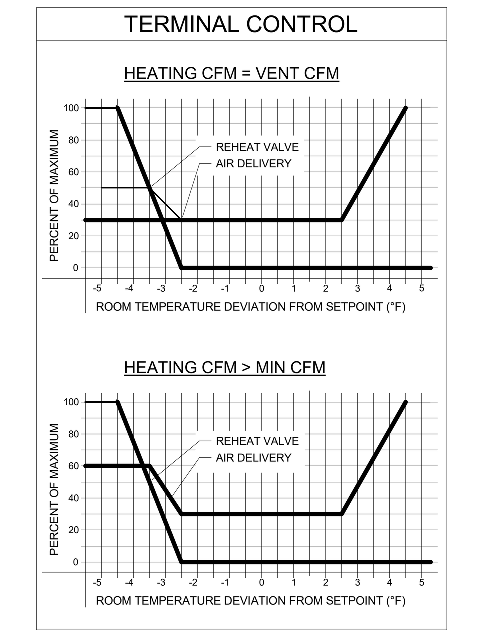


NOTES:
1. THE ADJACENT GRAPHICS ARE PROVIDED FOR REFERENCE ONLY.
2. EACH TERMINAL BOX IS UNIQUE AND MAY HAVE REQ'MTS THAT VARY FROM THOSE DEPICTED.
3. INCLUDE LOGIC TO OPERATE REHEAT VALVE TO MAINTAIN DISCHARGE AIR TEMPERATURE AT SETPOINT (I.E. 85°F MAX AT -2°F AND GREATER DEVIATION FROM SETPOINT)
4. REFER TO EQUIPMENT SCHEDULES FOR INITIAL AIR DELIVERY (CFM) SETTINGS.

THE SPACE MOUNTED TEMPERATURE SENSOR SHALL INCORPORATE A WARMER/COOLER ADJUSTMENT ALLOWING ZONE OCCUPANTS TO BIAS THE SPACE TEMPERATURE SETPOINT BY A FIXED AMOUNT IN EITHER DIRECTION.

FEATURES -
1. COOPERATION WITH NIGHT VENT COOLING, MORNING WARM-UP, AND DCV LOGIC WHERE SPECIFIED IN RESPECTIVE SEQUENCES.
2. SPACE TEMPERATURE SHALL BE TRENDED HOURLY.
3. GENERATE AN ALARM SHOULD DISCHARGE AIR TEMPERATURE STRAY FROM DISCHARGE AIR TEMPERATURE SETPOINT BY 5 DEG OR MORE.
4. HOURLY TREND ITEMS INDICATED IN THE POINTS LIST TO BE TRENDED. STORE DATA FOR 1 YEAR PRIOR TO PURGING.

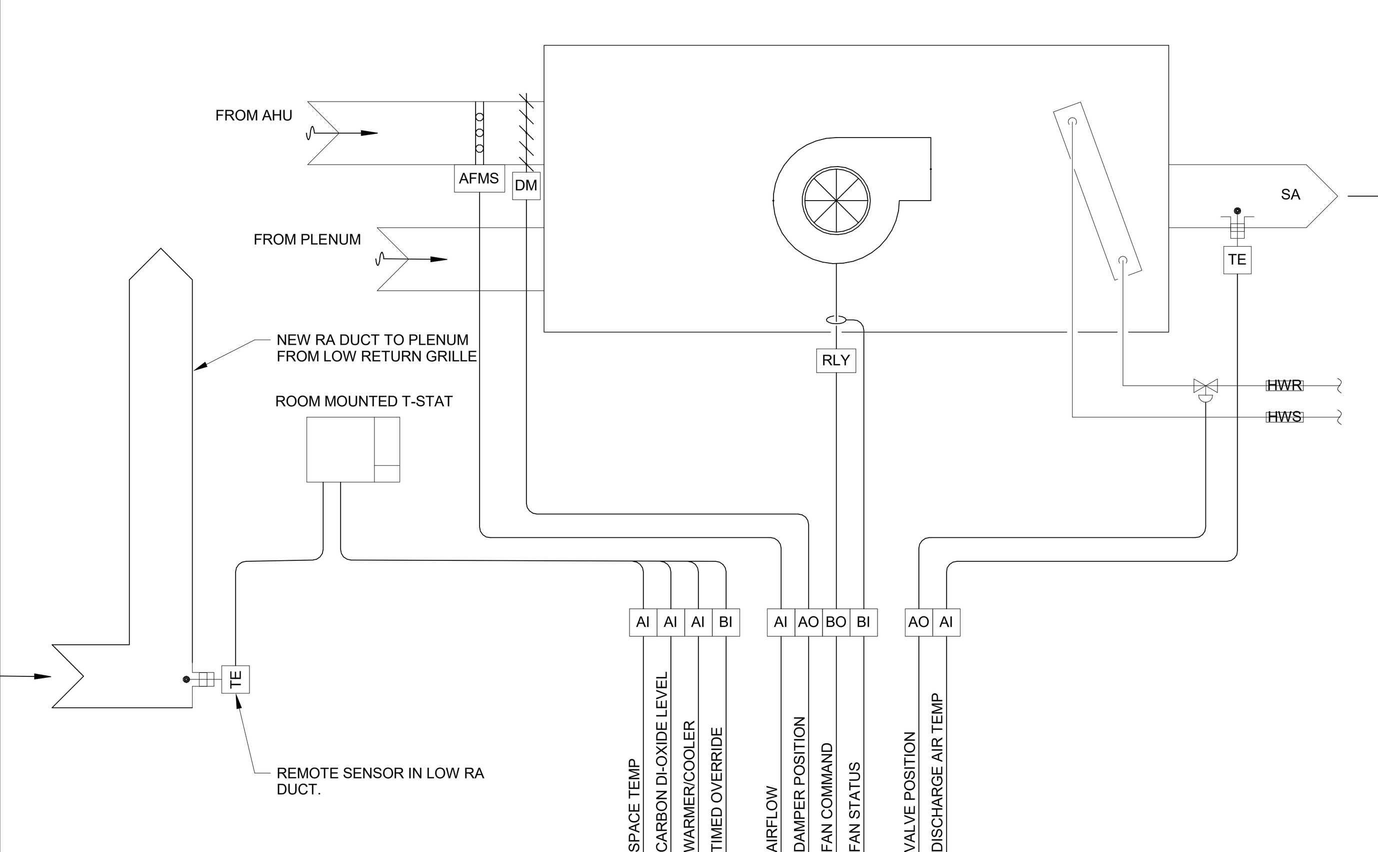


4 EXISTING FAN POWERED VAV WITH HW REHEAT CONTROL DIAGRAM

SCALE: NONE

# SEQUENCE OF CONTROL:

THE EXISTING SYSTEM CONSIST OF A PRESSURE INDEPENDENT VARIABLE AIR VOLUME BOX COMPLETE WITH FAN, MOTORIZED DAMPER, HOT WATER REHEAT COIL, FLOATING OR MODULATING CONTROL VALVE, AND AIR FLOW PRESSURE TRANDUCER. A NEW TEMPERATURE SENSOR SHALL BE PROVIDED WITH REMOTE SENSOR MOUNTED IN THE RETURN AIR DUCT TO PROVIDE AN ACCURATE READING OF FLOOR-LEVEL TEMPERATURE.

SCHEDULING:
SET POINT SHALL BE MEASURED BY THE RETURN-DUCT MOUNTED TEMPERATURE SENSOR. THE ROOM TEMPERATURE SETPOINT SHALL BE SCHEDULED THROUGH THE OPERATOR WORKSTATION SUCH THAT HEATING ROOM TEMPERATURE SETPOINT AND COOLING ROOM TEMPERATURE SETPOINT ARE SET UP AND SET BACK RESPECTIVELY DURING UNOCCUPIED MODES. A THERMOSTAT MOUNTED TIMED OVERRIDE BUTTON SHALL ALLOW ROOM OCCUPANTS TO OVERRIDE THE VAV BOX INTO AN OCCUPIED MODE FOR A SET TIME DURATION SHOULD OCCUPANTS DESIRE TO USE THE SPACE DURING UNOCCUPIED TIMES. THE RESPECTIVE AIR HANLDING UNIT SHALL BE OPERATIONAL WHENEVER VAV BOX IS IN OCCUPIED MODE. THE VAV BOX FAN IN THE SERIES POSITION SHALL ENERGIZE WHEN ZONE IS SCHEDULED TO BE OCCUPIED, AND SHALL DE-ENERGIZE WHEN ZONE IS IN UNOCCUPIED MODE.

OCCUPIED CONTROL
TERMINAL FAN SHALL RUN CONTINUOUSLY. THE AIRFLOW PRESSURE TRANDUCER SHALL INDICATE TO THE UNIT MOUNTED DDC CONTROLLER MEASURED AIRFLOW. THE DDC CONTROLLER SHALL MODULATE THE VAV BOX DAMPER TO MAINTAIN AIRFLOW AT SETPOINT. AIRFLOW SETPOINT SHALL BE RESET BASED ON THE DIFFERENCE BETWEEN SPACE TEMPERATURE AND SPACE SETPOINT. UPON A RISE IN SPACE TEMPERATURE ABOVE SETPOINT AIRFLOW SHALL MODULATE TO THE MAXIMUM SETPIONT. UPON A FALL IN SPACE TEMPERATURE BELOW SPACE TEMPERATURE SETPOINT AIRFLOW SHALL MODULATE TO THE MINIMUM SETPOINT. SHOULD SPACE TEMPERATURE REMAIN BELOW SPACE SETPOINT PLUS DIFFERENTIAL THE HOT WATER CONTROL VALVE SHALL MODULATE OPEN. A SPACE MOUNTED TEMPERATURE SENSOR SHALL INCORPORATE A WARMER/COOLER ADJUSTMENT ALLOWING ZONE OCCUPANTS TO BIAS THE SPACE TEMPERATURE SETPOINT BY A FIXED AMOUNT IN EITHER DIRECTION.

FEATURES
SPACE TEMPERATURE SHALL BE TRENDED HOURLY
SPACE TEMPERATURE OF 5 DEGREES OR MORE ABOVE OR BELOW SETPOINT SHALL ALARM
FAN STATUS OTHER THAN COMMAND SHALL ALARM
DAT HIGH/LOW OR OUT OF RANGE SHALL ALARM
AIRFLOW OUT OF RANGE SHALL ALARM

**SYSTEM POINTS LIST -- SERIES FAN POWERED VAV BOX WITH HW REHEAT**

| SYSTEM POINT DESCRIPTION | | | ANALOG | | | | | | | | | | BINARY | | | | | | | | | | | SYSTEM FEATURE | | | | | | | |
|---|---|---|---|---|---|---|---|---|---|---|---|---|---|---|---|---|---|---|---|---|---|---|---|---|---|---|---|---|---|---|---|
| | | | INPUT | | | | | | | | | OUTPUT | INPUT | | | | | OUTPUT | | | | | | ALARMS | | | PROGRAMS | | | | |
| | GRAPHIC SCREEN | ANIMATED POINT ON GRAPHIC | TEMPERATURE | PRESSURE | RELATIVE HUMIDITY | KW | KWH | BTU HR | GPM | PERCENT | CFM | DDC (4-20 ma, 0-10 vdc) | STATUS | STATUS ON/OFF | FILTER STATUS | STATUS OPEN/CLSD. | TIMED OVERRIDE | STOP/START | OPEN/CLOSED | LOCK OUT | ENABLE/DISABLE | HIGH/LOW SPEED | FLOATING CONTROL | HIGH OR LOW VALUE | OUT OF RANGE | STATUS DIFF. FROM CMD | TREND VALUE | TREND STATUS | LEAD/LAG | ROTATIONALLY SEQUNCE | NOTES |
| SPACE TEMP | X | | X | | | | | | | | | | | | | | | | | | | | | X | | | X | | | | REMOTE DUCT SENSOR |
| WAMER/COOLER | X | | X | | | | | | | | | | | | | | | | | | | | | | | | | | | | |
| TIMED OVERRIDE | | | | | | | | | | | | | | | | | X | | | | | | | | | | | | | | |
| AIRFLOW | X | | | X | | | | | | | | | | | | | | | | | | | | X | | | X | | | | |
| CO2 LEVEL | X | | | | | | | | | | X | | | | | | | | | | | | | | X | X | X | | | | |
| DAMPER POSITION | X | | | | | | | | | | | X | | | | | | | | | | | | | | X | X | | | | |
| FAN COMMAND | | | | | | | | | | | | | | | | | | X | | | | | | | | X | X | | | | |
| FAN STATUS | X | X | | | | | | | | | | | | X | | | | | | | | | | | | X | X | | | | |
| VALVE POSITION | X | | | | | | | | | | | X | | | | | | | | | | | | | | X | X | | | | |
| DISCHG AIR TEMP | X | | X | | | | | | | | | | | | | | | | | | | | | X | X | | X | | | | |
| GENERAL NOTES: | | | | | | | | | | | | | | | | | | | | | | | | | | | | | | | |

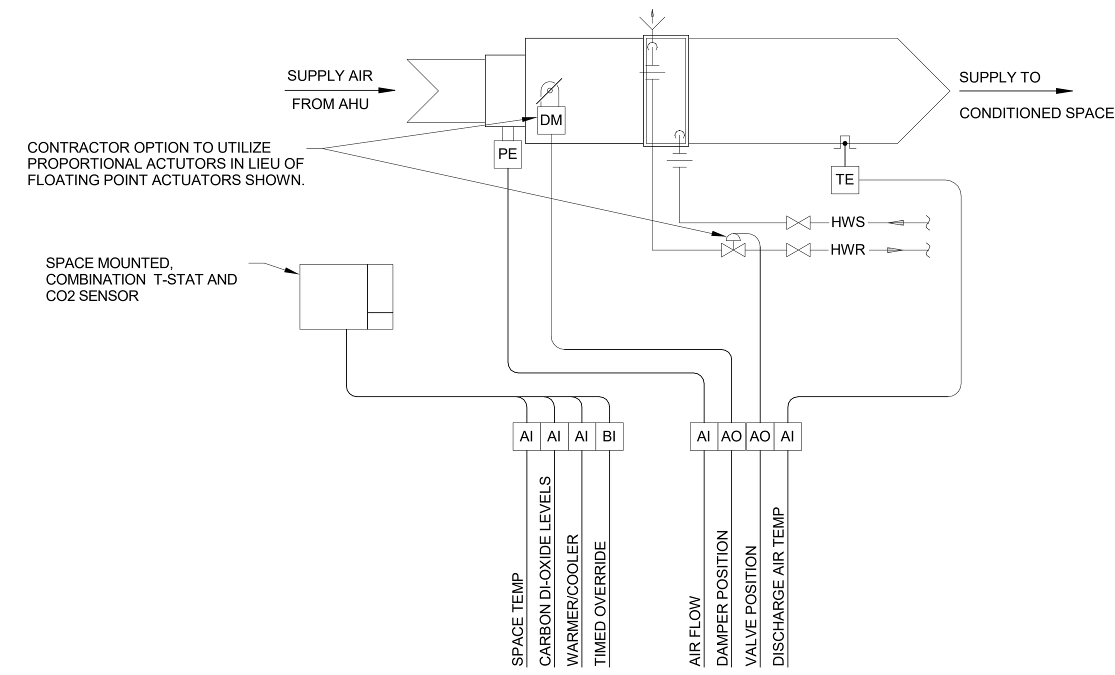


**SYSTEM POINTS LIST -- VAV BOX WITH HW REHEAT**

| SYSTEM POINT DESCRIPTION | | | ANALOG | | | | | | | | | | BINARY | | | | | | | | | | | SYSTEM FEATURE | | | | | | | |
|---|---|---|---|---|---|---|---|---|---|---|---|---|---|---|---|---|---|---|---|---|---|---|---|---|---|---|---|---|---|---|---|
| | | | INPUT | | | | | | | | | OUTPUT | INPUT | | | | | OUTPUT | | | | | | ALARMS | | | PROGRAMS | | | | |
| | GRAPHIC SCREEN | ANIMATED POINT ON GRAPHIC | TEMPERATURE | CARBON DI-OXIDE | RELATIVE HUMIDITY | KW | KWH | BTU HR | GPM | PERCENT | CFM | DDC (4-20 ma, 0-10 vdc) | STATUS | STATUS ON/OFF | FILTER STATUS | STATUS OPEN/CLSD. | TIMED OVERRIDE | STOP/START | OPEN/CLOSED | LOCK OUT | ENABLE/DISABLE | HIGH/LOW SPEED | FLOATING CONTROL | HIGH OR LOW VALUE | OUT OF RANGE | STATUS DIFF. FROM CMD | TREND VALUE | TREND STATUS | LEAD/LAG | ROTATIONALLY SEQUNCE | NOTES |
| SPACE TEMP | X | | X | | | | | | | | | | | | | | | | | | | | | X | | | X | | | | |
| WAMER/COOLER | X | | X | | | | | | | | | | | | | | | | | | | | | | | | | | | | |
| TIMED OVERRIDE | | | | | | | | | | | | | | | | | X | | | | | | | | | | | | | | |
| CO2 LEVEL | X | | | X | | | | | | | | | | | | | | | | | | | | X | | | X | | | | |
| AIRFLOW | X | | | | | | | | | | X | | | | | | | | | | | | | | X | X | X | | | | |
| DAMPER POSITION | X | | | | | | | | | | | X | | | | | | | | | | | | | | X | X | | | | |
| VALVE POSITION | X | | | | | | | | | | | X | | | | | | | | | | | | | | X | X | | | | |
| DISCHG AIR TEMP | X | | X | | | | | | | | | | | | | | | | | | | | | X | X | | X | | | | |
| GENERAL NOTES: | | | | | | | | | | | | | | | | | | | | | | | | | | | | | | | |

2 KITCHEN AND CAFETERIA SPACE VAV

SCALE: NONE

# SEQUENCE OF CONTROL:

DESCRIPTION - THE NEW SYSTEMS CONSIST OF A PRESSURE INDEPENDENT VARIABLE AIR VOLUME BOX COMPLETE WITH MOTORIZED DAMPER, HOT WATER REHEAT COIL, FLOATING POINT OR PROPORTIONAL CONTROL VALVE, AND AIR FLOW PRESSURE TRANSDUCER.

SCHEDULING - OCCUPIED/UNOCUPIED SCHEDULING APPLIES TO THESE SYSTEMS. SCHEDULES TO BE DETERMINED BY OWNER AND SHALL BE AVAILABLE THROUGH THE OPERATOR WORKSTATION INTERFACE.

SCHEDULING CONTROLS SPACE SETPOINT TEMPERATURE. DURING OCCUPIED MODE, TERMINAL UNIT SHALL MAINTAIN SPACE TEMPERATURE AT SETPOINT DICTATED BY SPACE MOUNTED THERMOSTAT (I.E. 68-72°F HEATING, 76-80°F COOLING). DURING UNOCCUPIED MODE, TERMINAL UNIT SHALL MAINTAIN SPACE TEMPERATURE AT SETBACK TEMPERATURE SETPOINT (I.E. 60°F HEATING, N/A COOLING)

OCCUPIED/UNOCCUPIED SCHEDULING ALSO CONTROLS VENTILATION. WHEN SCHEDULED IN THE OCCUPIED MODE, TERMINAL UNIT SHALL PROVIDE MINIMUM VENTILATION CFM CALCULATED BY THE DEMAND CONTROL VENTILATION PROGRAM. WHEN SCHEDULED IN THE UNOCCUPIED MODE, DAMPER SHALL BE SHUT. TERMINAL BOX SHALL BE PERMITTED TO OPEN AS REQUIRED ON DEMAND FOR HEATING ONLY, DURING UNOCCUPIED PERIODS.

TIMED OVERRIDE - SHOULD THE TIMED OVERRIDE BE SWITCHED TO OCCUPIED DURING UNOCCUPIED MODE, OCCUPIED MODE OPERATION SHALL APPLY FOR THE TIMED OCCUPANCY DURATION.

KITCHEN HOOD VENTILATION MODE. WHEN KITCHEN EXHAUST HOOD IS ACTIVATED, VAV WILL BE OVERRIDDEN TO OCCUPIED MODE AND MAX DESIGN CFM. WHEN KITCHEN EXHAUST IS OFF, VAV WILL RETURN TO NORMAL OPERATION.

CONTROL - THE AIRFLOW PRESSURE TRANSDUCER SHALL INDICATE TO THE UNIT MOUNTED DDC CONTROLLER MEASURED AIRFLOW. THE DDC CONTROLLER SHALL MODULATE THE VAV BOX DAMPER TO MAINTAIN AIRFLOW AT SETPOINT. AIRFLOW SETPOINT AND REHEAT VALVE SHALL BE MODULATED BASED ON SPACE TEMPERATURE DEVIATION FROM SETPOINT PER THE SAMPLE RESET SCHEDULES BELOW INDICATING DEADBAND, HEATING AND COOLING RAMP-UP RANGES, AND MINIMUM AIRFLOWS.

WHEN KITCHEN VENTILATION MODE IS ACTIVATED, THE DDC CONTROLLER SHALL DRIVE THE AIRFLOW TO CONSTANT VOLUME AT MAXIMUM CFM, AND MODULATE THE REHEAT VALVE TO MAINTAIN SPACE TEMPERATURE SETPOINT.

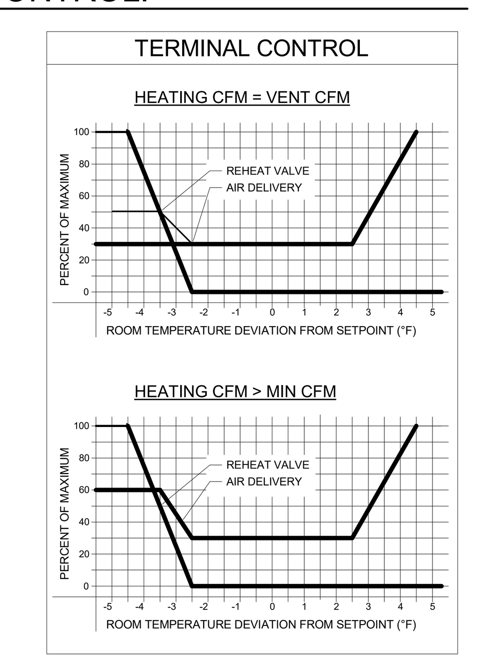


NOTES:
1. THE ADJACENT GRAPHICS ARE PROVIDED FOR REFERENCE ONLY.
2. EACH TERMINAL BOX IS UNIQUE AND MAY HAVE REQ'MTS THAT VARY FROM THOSE DEPICTED ABOVE.
3. INCLUDE LOGIC TO OPERATE REHEAT VALVE TO MAINTAIN DISCHARGE AIR TEMPERATURE AT SETPOINT (I.E. 85°F MAX AT -2°F AND GREATER DEVIATION FROM SETPOINT)
4. REFER TO EQUIPMENT SCHEDULES FOR INITIAL AIR DELIVERY (CFM) SETTINGS.

THE SPACE MOUNTED TEMPERATURE SENSOR SHALL INCORPORATE A WARMER/COOLER ADJUSTMENT ALLOWING ZONE OCCUPANTS TO BIAS THE SPACE TEMPERATURE SETPOINT BY A FIXED AMOUNT IN EITHER DIRECTION.

FEATURES -
1. COOPERATION WITH NIGHT VENT COOLING, MORNING WARM-UP, DCV LOGIC, AND KITCHEN VENTILATION WHERE SPECIFIED IN RESPECTIVE SEQUENCES.
2. SPACE TEMPERATURE SHALL BE TRENDED HOURLY.
3. GENERATE AN ALARM SHOULD DISCHARGE AIR TEMPERATURE STRAY FROM DISCHARGE AIR TEMPERATURE SETPOINT BY 5 DEG OR MORE.
4. HOURLY TREND ITEMS INDICATED IN THE POINTS LIST TO BE TRENDED. STORE DATA FOR 1 YEAR PRIOR TO PURGING.

**RCRBD Record Set**
**T.A.**
05/14/2020

TAB
Associates
*The Architectural Balance*
0056 Edwards Village Blvd.
Suite 210
Edwards, CO 8132
(970) 766-1470
fax: (970) 766-1471
email: tab@vail.net
www.tabassociates.com

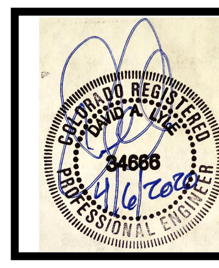


**STRAWBERRY PARK ELEMENTARY**
**39620 AMETHYST DRIVE**
**Steamboat Springs, CO**

| Revisions: | | |
|---|---|---|
| No | Description | Date |
| | | |

Issue Dates:
PERMIT SET
04.06.2020

Sheet Title:
MECHANICAL DIAGRAMS

BG BUILDINGWORKS
systems fulfilled
303.278.3820 www.bgbuildingworks.com
Project No. 10182.00
Copyright 2020
ALBUQUERQUE | AVON | DENVER | FORT COLLINS

Project No:
10182.00

Sheet No:
M4.3

# ELECTRICAL SYSTEMS LEGEND

NOTE:
ALL SYMBOLS SHOWN ON LEGEND ARE NOT NECESSARILY USED.

## LIGHTING FIXTURE SYMBOLS

| | |
|---|---|
| | RECESSED FIXTURE |
| | RECESSED WALL WASHER |
| | RECESSED ADJUSTABLE ACCENT |
| | RECESSED INGRADE UPLIGHT |
| | SURFACED MOUNTED LINEAR TROFFER |
| | RECESSED LINEAR TROFFER |
| | RECESSED LINEAR WALL WASH/GRAZE |
| | RECESSED INGRADE LINEAR UPLIGHT |
| | RECESSED INGRADE LINEAR WALL WASH/GRAZE |
| | LINEAR PENDANT MOUNTED LIGHT |
| | STRIP LIGHT |
| | SURFACE MOUNTED LED PANEL |
| | SURFACE MOUNTED LIGHT |
| | PENDANT MOUNTED LIGHT |
| | WALL MOUNTED LIGHT |
| | WALL MOUNTED DECORATIVE SCONCE |
| | WALL MOUNTED ADJUSTABLE LIGHT |
| | WALL MOUNTED UPLIGHT |
| | WALL MOUNTED READING LIGHT |
| | WALL MOUNTED SWING ARM LIGHT |
| | WALL MOUNTED LINEAR LIGHT |
| | CEILING/PENDANT MOUNTED TRACK WITH ADJUSTABLE TRACK HEAD |
| | LINEAR TAPELIGHT OR COVE LIGHT |
| | LINEAR CLOSRT ROD FIXTURE |
| | LINEAR LIGHTING (VERTICAL) |
| | RECESSED STEP LIGHT |
| | MONO-POINT LIGHTING FIXTURE |
| | MONO-POINT STAKE MOUNT ACCENT |
| | TABLE LAMP |
| | FLOOR LAMP |
| | CEILING MOUNTED EXIT SIGN W/ FACES & ARROWS AS SHOWN |
| | WALL MOUNTED EXIT SIGN W/ FACES & ARROWS AS SHOWN |
| | WALL MOUNTED COMBO EXIT SIGN / EGRESS LIGHT |
| | EMERGENCY LIGHTS |
| | EXTERIOR POLE MOUNTED LIGHT |
| | EXTERIOR POST (BOLLARD) MOUNTED LIGHT |
| | FIXTURE WITH EMERGENCY BACKUP OR ON EM CIRCUIT |

## LIGHTING CONTROL SYMBOLS

| | |
|---|---|
| $ | WALL MOUNTED SWITCH |
| $3 | THREE-WAY SWITCH |
| $4 | FOUR-WAY SWITCH |
| $J | DOOR JAMB SWITCH |
| $K | KEY SWITCH |
| $D | DIMMER SWITCH |
| XXX | WALL MOUNTED DEVICE |
| RA | ROOM CONTROLLER |
| RL | PLUG LOAD CONTROLLER |
| | OCCUPANCY/VACANCY PROGRAMMED SENSOR - CEILING MOUNTED |
| | OCCUPANCY/VACANCY PROGRAMMED SENSOR - CORNER MOUNTED |
| | DAYLIGHT PHOTO SENSOR |

## LIGHTING DRAWING SYMBOLS

| | |
|---|---|
| | ALIGNMENT LINE |
| CL OBJECT | CENTER LINE DESIGNATION |
| | DAYLIGHT ZONE |

NOTE: SEE CONTROLS SCHEDULE FOR FURTHER SPECIFCATION INFORMATION

## POWER SYMBOLS

| | |
|---|---|
| | SINGLE RECEPTACLE |
| | DUPLEX RECEPTACLE |
| | DUPLEX RECEPTACLE MOUNTED ABOVE COUNTER |
| | DOUBLE DUPLEX RECEPTACLE |
| | GFCI DUPLEX RECEPTACLE |
| | DUPLEX RECEPTACLE; HALF SWITCHED |
| | ISOLATED GROUND DUPLEX RECEPTACLE |
| | MULTI-OUTLET PLUG STRIP |
| | FLUSH FLOOR MOUNTED DUPLEX RECEPTACLE |
| | FLUSH FLOOR MOUNTED DOUBLE DUPLEX RECEPTACLE |
| | FLUSH FLOOR MOUNTED DUPLEX RECEPTACLE; HALF SWITCHED |
| | FLUSH FLOOR MOUNTED DUPLEX RECEPTACLE AND TELECOM |
| | WALL MOUNTED SPECIAL OUTLET AS NOTED |
| | SPECIAL OUTLET AS NOTED |
| J | JUNCTION BOX |
| J H | WALL MOUNTED JUNCTION BOX |
| J | FLOOR MOUNTED JUNCTION BOX |
| | MECHANICAL EQUIPMENT POWER CONNECTION |
| TS | TIMER SWITCH |
| | FUSED DISCONNECT |
| N | NON FUSED DISCONNECT |
| | MOTOR STARTER |
| EB | ENCLOSED CIRCUIT BREAKER |
| PB | PULL BOX |
| | PUSH BUTTON |
| TC | TIME CLOCK |
| PC | PHOTO-CELL |
| T | TRANSFORMER |
| | PANELBOARD OR LOADCENTER |
| C | CONTACTOR |
| | ELECTRIC MOTOR |
| | METER |
| T | THERMOSTAT |
| ATS | AUTOMATIC TRANSFER SWITCH |
| | CIRCUIT HOMERUN |
| | CONDUIT RUN |
| | CONDUIT RUN BELOW GRADE |
| | CONDUIT UP |
| | CONDUIT DOWN |
| $ | SWITCH |
| $T | THERMAL OVERLOAD SWITCH |
| $V | VARIABLE SPEED SWITCH |
| $K | KEY SWITCH |

## ONE-LINE DIAGRAM SYMBOLS

| | |
|---|---|
| | DISCONNECT SWITCH |
| | FUSE |
| | CIRCUIT BREAKER |
| | CURRENT TRANSFORMER |
| | POTENTIAL TRANSFORMER |
| M | METER |
| V | VOLT-METER |
| A | AMP-METER |
| SPD | SURGE PROTECTION DEVICE |
| | SELECTOR SWITCH |
| GF | GROUND FAULT PROTECTION |
| ST | SHUNT TRIP |
| | NORMALLY OPEN CONTACT |
| | NORMALLY CLOSED CONTACT |
| | GROUND |
| | COLD WATER GROUND CONNECTION |
| | BUILDING STEEL GROUND CONNECTION |

## ABBREVIATIONS

| | |
|---|---|
| AFC | ABOVE FINISHED CEILING |
| AFF | ABOVE FINISHED FLOOR |
| AFG | ABOVE FINISHED GRADE |
| AHJ | AUTHORITY HAVING JURISDICTION |
| AL | ALUMINUM |
| AP | ACCESS POINT |
| AWG | AMERICAN WIRE GAUGE |
| BAS | BUILDING AUTOMATION SYSTEM |
| BFG | BELOW FINISH GRADE |
| BMS | BUILDING MANAGEMENT SYSTEM |
| C | CONDUIT |
| CATV | COMMUNITY (CABLE) ANTENNA TELEVISION SYSTEM |
| CCTV | CLOSED CIRCUIT TELEVISION |
| CKT | CIRCUIT |
| CPU | CENTRAL PROCESSING UNIT |
| CT | CURRENT TRANSFORMER |
| DISP | GARBAGE DISPOSAL |
| DW | DISHWASHER |
| (E) | EXISTING |
| EM | EMERGENCY |
| EWC | ELECTRIC WATER COOLER |
| FA | FIRE ALARM |
| FACP | FIRE ALARM CONTROL PANEL |
| FBO | FURNISHED BY OTHERS |
| GC | GENERAL CONTRACTOR |
| GFI | GROUND FAULT CIRCUIT INTERRUPTER |
| GRD | GROUND |
| IAW | IN ACCORDANCE WITH |
| IC | INTERMEDIATE CROSS-CONNECT |
| IDF | INTERMEDIATE DISTRIBUTION FRAME |
| IG | ISOLATED GROUND |
| IR | INFRARED |
| LAN | LOCAL AREA NETWORK |
| MDF | MAIN DISTRIBUTION FRAME |
| (N) | NEW |
| NIC | NOT IN CONTRACT |
| NL | NIGHT LIGHT |
| NTS | NOT TO SCALE |
| OC | ON CENTER |
| PA | PUBLIC ADDRESS |
| REF | REFRIGERATOR |
| SPD | SURGE PROTECTION DEVICE |
| TTB | TELECOMMUNICATIONS TERMINAL BOARD |
| TVTB | TELEVISION TERMINAL BOARD |
| UG | UNDERGROUND |
| UNO | UNLESS NOTED OTHERWISE |
| V | VOLT |
| W | WATT |
| WAN | WIDE AREA NETWORK |
| WAP | WIRELESS ACCESS POINT |
| WLAN | WIRELESS LOCAL AREA NETWORK |
| WP | WEATHERPROOF |
| XP | EXPLOSIONPROOF |
| +18" | MOUNTING HEIGHT TO CENTERLINE OF DEVICE ABOVE FINISH FLOOR (VERIFY W/ ARCH ELEVATIONS) |

NOTES:

- LIGHT LINEWEIGHT INDICATES EXISTING.
- HATCHED AREAS INDICATE DEMOLITION.
- 'C' ADJACENT TO A DEVICE INDICATES MOUNTING ABOVE COUNTERTOP.

# MECHANICAL EQUIPMENT WIRING AND CONNECTIONS

| | ITEM | FURNISHED UNDER | SET IN PLACE OR MTD. UNDER | WIRED/ CONNECTED UNDER |
|---|---|---|---|---|
| 1 | EQUIPMENT MOTORS AND THERMAL OVERLOADS, RESISTANCE HEATERS. | MD | MD | ED |
| 2 | VFD'S, MOTOR CONTROLLERS, MAGNETIC STARTERS, REDUCED VOLTAGE STARTERS AND OVERLOAD RELAYS. | MD | ED(a) | ED |
| 3 | DISCONNECT SWITCHES (FUSED OR NON-FUSED), HP RATED SWITCHES, THERMAL OVERLOAD SWITCHES AND FUSES AND MANUAL OPERATING SWITCHES. | ED(a) | ED(a) | ED |
| 4 | PUSHBUTTON STATIONS, PILOT LIGHTS, MULTI-SPEED SWITCHES, FLOAT SWITCHES, THERMOSTATS, CONTROL RELAYS, TIMECLOCKS, CONTROL TRANSFORMERS, CONTROL PANELS, MOTOR VALVES, DAMPER ACTUATORS, SOLENOID VALVES, EP AND PE SWITCHES AND INTERLOCKS. | MD | MD | MD(b) |
| 5 | 120 VOLT POWER FOR BAS PANELS, FIRE PROTECTION AND BOILER CONTROLS. | ED | ED | ED |
| 6 | FIRE/SMOKE DAMPERS AND ELEVATOR VENT DAMPERS. | MD | MD | ED(c) |

MD = MECHANICAL DIVISION

ED = ELECTRICAL DIVISION

NOTES:

(a) IF FURNISHED AS PART OF FACTORY-WIRED EQUIPMENT, THEN WIRING AND CONNECTIONS ONLY BY ED

(b) IF ANY OF THESE DEVICES CARRY THE FULL LOAD CURRENT TO ANY MOTOR THEY SHALL BE CONNECTED BY ED. CONTROL DEVICES CARRYING FULL LOAD CURRENT FURNISHED BY MD AND WIRED BY ED SHALL BE LOCATED AT THE DEVICE BEING CONTROLLED, UNLESS SHOWN ON DRAWINGS OR MUTUAL AGREEMENT IS MADE BETWEEN THE CONTRACTORS WITH NO CHANGE IN THE CONTRACT PRICE.

(c) WIRING FROM ALARM CONTACTS TO ALARM SYSTEM BY ED; ALL CONTROL FUNCTION WIRING BY MD. DUCT DETECTORS FURNISHED BY ED, SET IN PLACE BY MD.

GENERAL NOTES: THE ABOVE LIST DOES NOT ATTEMPT TO INCLUDE ALL COMPONENTS. ALL ITEMS NECESSARY FOR A COMPLETE SYSTEM SHALL BE INCLUDED IN THE BASE CONTRACT.

# ELECTRICAL SHEET INDEX

| # | TITLE | DD - 02.20.2020 | CD PROGRESS - 03.13.2020 | 95% CD - 03.30.2020 | PERMIT - 04.06.2020 | | | | | |
|---|---|---|---|---|---|---|---|---|---|---|
| | | ISSUE LOG | | | | | | | | |
| E0.0 | ELEC COVER SHEET | √ | √ | √ | √ | | | | | |
| E0.1 | ELECTRICAL SCHEDULES | √ | √ | √ | √ | | | | | |
| E0.2 | ELECTRICAL SCHEDULES | √ | √ | √ | √ | | | | | |
| E1.0 | ELECTRICAL SITE PLAN | | √ | √ | √ | | | | | |
| ED2.1 | MAIN LEVEL AREA A DEMO ELECTRICAL PLAN | √ | √ | √ | √ | | | | | |
| ED2.2 | PRE-K PLAN AREA B DEMO ELECTRICAL PLAN | √ | √ | √ | √ | | | | | |
| ED2.11 | MAIN LEVEL AREA A DEMO LIGHTING PLAN | √ | √ | √ | √ | | | | | |
| ED2.12 | PRE-K PLAN AREA B DEMO LIGHTING PLAN | √ | √ | √ | √ | | | | | |
| E2.1 | MAIN LEVEL AREA A ELEC PLAN | √ | √ | √ | √ | | | | | |
| E2.2 | PRE-K PLAN AREA B ELECTRICAL PLAN | √ | √ | √ | √ | | | | | |
| E2.3 | ELECTRICAL ROOF PLAN | | | √ | √ | | | | | |
| E2.11 | MAIN LEVEL AREA A LIGHTING PLAN | √ | √ | √ | √ | | | | | |
| E2.12 | PRE-K PLAN AREA B LIGHTING PLAN | √ | √ | √ | √ | | | | | |
| E3.1 | ELECTRICAL DIAGRAMS | √ | √ | √ | √ | | | | | |

ISSUE LOG KEY:
'√' ISSUED AS PART OF SET
' ' NOT PART OF SET
'*' ISSUED FOR INFORMATION ONLY

# GENERAL NOTES:

1. DO NOT SCALE DRAWINGS. VERIFY DIMENSIONS ON ARCHITECTURAL DRAWINGS AND IN FIELD PRIOR TO COMMENCEMENT OF WORK. ELECTRICAL DRAWINGS ARE DIAGRAMMATIC. SIZES AND LOCATION OF EQUIPMENT AND WIRING ARE SHOWN TO SCALE WHERE POSSIBLE, BUT MAY BE DISTORTED FOR CLARITY ON THE DRAWINGS. FINAL LOCATION OF OUTLETS AND EQUIPMENT SHALL BE AS APPROVED BY THE ARCHITECT. IT IS NOT WITHIN THE SCOPE OF DRAWINGS TO SHOW ALL NECESSARY BENDS, OFFSETS, PULL BOXES AND OBSTRUCTIONS. IT SHALL BE THE RESPONSIBILITY OF THE CONTRACTOR TO INSTALL HIS WORK TO CONFORM TO THE STRUCTURE, PRESERVE HEADROOM AND KEEP OPENINGS AND PASSAGEWAYS CLEAN.
2. EXISTING CONDITIONS WERE TAKEN FROM ORIGINAL DRAWINGS AND SITE VISITS AND MAY NOT REFLECT EXACT 'AS-BUILT' CONDITIONS. FIELD VERIFY ALL EXISTING CONDITIONS PRIOR TO SUBMITTING FINAL BIDS. CAREFULLY COORDINATE NEW WORK AND DEMOLITION WITH ALL OTHER DISCIPLINES AND EXISTING CONDITIONS.
3. SYSTEM OUTAGES SHALL BE PERMITTED ONLY AT TIMES APPROVED BY OWNER – IN WRITING. WORK WHICH COULD RESULT IN AN ACCIDENTAL OUTAGE (BEYOND BRANCH CIRCUITS) SHALL BE PERFORMED WITH THE OWNER'S MAINTENANCE PERSONNEL ADVISED OF SUCH WORK.
4. SERVICE SHALL BE MAINTAINED TO EXISTING AREAS DURING CONSTRUCTION. CONTRACTOR SHALL PROVIDE PORTABLE GENERATORS, CABLES, OUTLETS, ETC. AS REQUIRED TO MAINTAIN CONTINUITY OF SERVICE. PLACEMENT OF SUCH PORTABLE EQUIPMENT SHALL BE SUBJECT TO OWNER APPROVAL.
5. REVIEW ARCHITECTURAL, MECHANICAL AND OTHER DRAWINGS PRIOR TO BID. CONTRACTOR SHALL BE RESPONSIBLE TO COORDINATE WITH ALL TRADES AND ELECTRICAL REFERENCES ON ARCHITECTURAL DRAWINGS. COORDINATE EXACT COLOR, LOCATION AND MOUNTING HEIGHT OF ALL LIGHT FIXTURES AND DEVICES WITH ARCHITECT PRIOR TO ROUGH-IN.
6. VERIFY REQUIREMENTS OF ALL MECHANICAL EQUIPMENT WITH SHOP DRAWING SUBMITTALS. NOTIFY ENGINEER OF ANY CONFLICTS BETWEEN EQUIPMENT SUBMITTALS AND ELECTRICAL DRAWINGS.
7. WORK SHALL BE PERFORMED IN A WORKMANLIKE MANNER TO THE SATISFACTION OF THE ARCHITECT.
8. WORK, MATERIALS, AND EQUIPMENT SHALL CONFORM TO THE LATEST EDITIONS OF LOCAL, STATE, AND NATIONAL CODES AND ORDINANCES.
9. SECURE AND PAY FOR ALL PERMITS AND FEES NECESSARY FOR EXECUTION AND COMPLETION OF ELECTRICAL WORK. FURNISH TO THE ARCHITECT A COPY OF INSPECTION REPORTS AND APPROVAL CERTIFICATES FROM LOCAL AND STATE INSPECTIONS.
10. CONTRACTOR'S FAILURE TO ORDER OR RELEASE ORDER FOR MATERIALS AND/OR EQUIPMENT WILL NOT BE ACCEPTED AS A REASON TO SUBSTITUTE ALTERNATE MATERIALS, EQUIPMENT, OR INSTALLATION METHODS.
11. VERIFY EXACT LOCATIONS OF EXISTING AND NEW UNDERGROUND UTILITIES, PIPING AND RACEWAY SYSTEMS PRIOR TO TRENCHING. PROVIDE NECESSARY TRENCHING, BACKFILL, EXCAVATION, SUPPORTS, SERVICE FEEDERS (CONDUIT AND/OR WIRE), PULLBOXES, TRANSFORMER PADS, SAWCUTTING AND PATCHING, CONCRETE/PAVING, ETC. REQUIRED. BACKFILL TRENCHES TO 90 PERCENT COMPACTION AND PATCH TO MATCH EXISTING. CONTRACTOR SHALL OBTAIN AND VERIFY EXACT UTILITY COMPANY DRAWINGS AND REQUIREMENTS. ELECTRICAL CONTRACTOR IS TO SUBMIT A COMPLETE CONSTRUCTION DRAWING SET TO THE ELECTRICAL UTILITY COMPANY WITH-IN 10 DAYS OF AWARD OF CONTRACT. COORDINATE TIMELINE OF THEIR REVIEW, APPROVAL, CONSTRUCTION SCHEDULING AND INSTALLATION OF THE UTILITY TRANSFORMER WITH THE UTILITY COMPANY. NOTIFY OWNER OF ANY SCHEDULING CONFLICTS.
12. EXISTING SYSTEMS AND CONDITIONS SHOWN ON DRAWINGS FOR EXISTING BUILDINGS ARE TO BE NOTED "FOR GUIDANCE ONLY". THE ELECTRICAL CONTRACTOR TO FIELD CHECK ALL EXISTING CONDITIONS PRIOR TO BIDDING AND TO INCLUDE IN HIS BID AN ALLOWANCE FOR REMOVAL AND/OR RELOCATION OF EXISTING CONDUITS, WIRES, DEVICES, FIXTURES, OR OTHER EQUIPMENT AS INDICATED ON THE PLANS OR AS REQUIRED TO COORDINATE AND ADAPT NEW AND EXISTING ELECTRICAL SYSTEM TO ALL OTHER WORK AS REQUIRED.
13. ALL PENETRATIONS THROUGH FIRE RATED WALLS, FLOORS OR PARTITIONS SHALL BE SEALED TO PREVENT THE SPREAD OF SMOKE AND FIRE THROUGH THEM. THE FIRE RATING OF THE PENETRATION SEAL SHALL AT A MINIMUM BE THE SAME RATING AS THAT OF THE FLOOR OR WALL. REFER TO SPECIFICATIONS FOR ADDITIONAL INFORMATION.
14. EXPOSED CONDUIT SHALL BE INSTALLED IN STRAIGHT LINES, PARALLEL WITH OR AT RIGHT ANGLES TO THE BUILDING STRUCTURE. DO NOT LOOP EXCESS FLEXIBLE CONDUIT IN CEILING SPACE.
15. PROVIDE A SEPARATE CODE SIZED GREEN EQUIPMENT GROUND CONDUCTOR IN ALL CONDUITS AND RACEWAYS CONTAINING LINE VOLTAGE CIRCUITS. FOR ALL 20A CIRCUITS, EQUIPMENT GROUND CONDUCTOR SIZE SHALL MATCH PHASE CONDUCTOR SIZE. FOR CIRCUITS UPSIZED FOR VOLTAGE DROP INCREASE EQUIPMENT GROUNDING CONDUCTOR SIZE PER CODE.
16. PROVIDE ELECTRICAL DEMOLITION REQUIRED. REFER TO ARCHITECTURAL AND ELECTRICAL DEMOLITION DRAWINGS FOR LOCATION AND EXTENT OF DEMOLITION REQUIRED. CONTRACTOR SHALL VISIT SITE PRIOR TO BID TO DETERMINE EXTENT OF WORK INVOLVED.
17. PROVIDE ALL NECESSARY DEMOLITION TO REMOVE EXISTING UNUSED CONDUIT, WIRE, CABLE, J-BOXES, RECEPTACLES, SWITCHES, LIGHTS, FIRE ALARMS DEVICES, ETC. COMPLETE WITH ASSOCIATED CIRCUITING TO SOURCE. WHERE IT IS NOT FEASIBLE TO REMOVE THE ABOVE, OUTLET SHALL BE ABANDONED, WIRE REMOVED, AND BLANK COVER PLATES PROVIDED.
18. THE CONTRACTOR SHALL DO ALL CUTTING AND PATCHING OF THE EXISTING CONSTRUCTION WORK WHICH MAY BE REQUIRED FOR THE PROPER INSTALLATION OF THE ELECTRICAL WORK. ALL PATCHING SHALL BE OF THE SAME MATERIALS, WORKMANSHIP AND FINISH AS, AND SHALL ACCURATELY MATCH ALL SURROUNDING WORK.
19. ALL (E) EQUIPMENT, LAMPS, BALLASTS, ETC. BEING REMOVED SHALL BE DISCARDED IN ACCORDANCE WITH APPLICABLE EPA REQUIREMENTS.
20. EXISTING LIGHT FIXTURES, ELECTRICAL EQUIPMENT, ETC. BEING REMOVED SHALL BE RETURNED TO THE OWNER, EXCEPT FOR THOSE ITEMS BEING RELOCATED.
21. VERIFY LOCATIONS FOR ALL ELECTRICAL EQUIPMENT WITH ARCHITECTURAL DRAWINGS FOR INTERIOR DETAILS AND FINISH. IN CENTERING OUTLETS AND LOCATING BOXES AND OUTLETS, ALLOW FOR OVERHEAD PIPES, DUCTS AND MECHANICAL EQUIPMENT, VARIATIONS IN FIREPROOFING AND PLASTERING, WINDOW AND DOOR TRIM, PANELING, HUNG CEILING AND LIKE, AND CORRECT ANY INACCURACY RESULTING FROM FAILURE TO DO SO WITHOUT EXPENSE TO OWNER.
22. INSTALL ALL MATERIALS IN ACCORDANCE WITH THE MANUFACTURER'S RECOMMENDATIONS. ANY DEVIATIONS SHALL BE BROUGHT TO THE ARCHITECT/ENGINEER'S ATTENTION PRIOR TO INSTALLATION.
23. FINAL CONNECTIONS TO EQUIPMENT SHALL BE IN ACCORDANCE WITH MANUFACTURER'S APPROVED WIRING DIAGRAMS, DETAILS, AND INSTRUCTIONS. IT SHALL BE THE CONTRACTOR'S RESPONSIBILITY TO PROVIDE MATERIALS AND EQUIPMENT COMPATIBLE WITH EQUIPMENT ACTUALLY SUPPLIED.
24. CONTRACTOR SHALL BE RESPONSIBLE FOR REPLACING EQUIPMENT WHICH IS DAMAGED DUE TO INCORRECT FIELD WIRING PROVIDED UNDER THIS SECTION, OR FACTORY WIRING IN EQUIPMENT PROVIDED UNDER THIS SECTION.
25. UPON COMPLETION OF ALL ELECTRICAL WORK, ELECTRICAL CONTRACTOR SHALL ADJUST AND TEST ALL CIRCUITS, OUTLETS, SWITCHES, LIGHTS, MOTORS, AND ANY OTHER ELECTRICAL ITEMS SHALL BE IMMEDIATELY REPAIRED OR REPLACED WITH ALL NEW EQUIPMENT AND THAT PART OF THE SYSTEM SHALL THEN BE RETESTED. ALL SUCH REPLACEMENT OR REPAIR SHALL BE DONE AT NO ADDITIONAL COST TO THE OWNER.
26. AFTER COMPLETION OF WORK UNDER THIS SECTION, CLEAN-UP ALL RESULTANT DEBRIS FROM THIS WORK AND REMOVE FROM THE SITE.
27. ALL ELECTRICAL SYSTEMS COMPONENTS SHALL BE LISTED OR LABELED BY U.L. OR OTHER RECOGNIZED TESTING FACILITY.
28. WIRING DEVICES SHALL BE SPECIFICATION GRADE AND RATED AT 20 AMPERES FOR LIGHT SWITCHES, AND 20 AMPERES FOR DUPLEX RECEPTACLES. THE COLOR OF THE DEVICES AND COVER PLATES SHALL BE AS DIRECTED BY ARCHITECT.
29. ALL WIRING SHALL BE INSTALLED IN LISTED METALLIC RACEWAYS, UNLESS NOTED OTHERWISE. CONNECTORS SHALL BE INSULATED THROAT TYPE. MINIMUM RACEWAY SIZE IS 3/4". ALL FEEDERS SHALL BE INSTALLED IN RACEWAY CONFIGURATIONS SHOWN ON ONE-LINE. BRANCH CIRCUITS 25A AND LARGER SHALL BE INSTALLED IN INDIVIDUAL RACEWAYS. BRANCH CIRCUITS 20A AND SMALLER MAY BE GROUPED INTO RACEWAYS AS TO NOT EXCEED 6 CURRENT-CARRYING 75-DEGREE CONDUCTORS, OR 9 CURRENT-CARRYING 90-DEGREE CONDUCTORS, IN A SINGLE RACEWAY. METAL CLAD CABLE IS PERMITTED.
30. ALL EMPTY RACEWAY SYSTEMS SHALL HAVE A 200LB NYLON PULL STRING OR EQUAL, AND SHALL BE IDENTIFIED AT ALL JUNCTION, PULL AND TERMINATION POINTS, USING PERMANENT METALLIC TAGS. TAG SHALL INDICATE INTENDED USE OF CONDUIT, ORIGINATION, AND TERMINATION POINTS OF EACH INDIVIDUAL CONDUIT.
31. WIRE SHALL BE COPPER, 75 DEGREE CELSIUS RATED FOR GENERAL USE. WIRING WITHIN 3 INCHES OF FLUORESCENT BALLASTS WIRE SHALL BE COPPER, MINIMUM 90 DEGREE CELSIUS RATED. SIZES INDICATED ARE FOR INSTALLATION IN A MAXIMUM 30 DEGREE CELSIUS AMBIENT. CONDUCTOR AMPACITY SHALL BE DERATED FOR HIGHER AMBIENT INSTALLATIONS.
32. PROVIDE NEW UPDATED PANELBOARD DIRECTORIES FOR EXISTING AND NEW CIRCUITS BEING UTILIZED FOR COMPLETION OF PROJECT.
33. PANEL DIRECTORIES SHALL BE REMOVABLE. ROOM NAMES AND NUMBERS SHALL BE AS DIRECTED BY OWNER. DIRECTORIES SHALL BE TYPED AND INSTALLED UNDER CLEAR PLASTIC COVERS.
34. FINAL CONNECTIONS TO MOTORS, TRANSFORMERS, AND OTHER VIBRATING EQUIPMENT SHALL BE SEAL TITE FLEX AND APPROVED FITTINGS. DO NOT SECURE CONDUITS, DISCONNECTS, OR DEVICES TO DUCTWORK OR MECHANICAL EQUIPMENT.
35. REFER TO FOOD SERVICE DRAWINGS FOR ADDITIONAL ROUGH-IN REQUIREMENTS NOT INDICATED WITHIN THIS SERIES. ELECTRICAL CONTRACTOR SHALL COORDINATE ALL FOOD SERVICE ROUGH-IN WITH EQUIPMENT INSTALLER PRIOR TO WORK.
36. ALL REMOTE POWER SUPPLIES FOR LIGHTING SHALL BE LOCATED WHERE ACCESSIBLE AND CONCEALED FROM PUBLIC VIEW. LABEL POWER SUPPLY WITH CIRCUIT, LOAD SERVED, AND ROOM WHERE LOAD IS SERVED. WHERE APPLICABLE AND/OR INDICATED ON DRAWINGS, LOCATE REMOTE EQUIPMENT ON WALL AREA ABOVE DOORWAYS FOR CONSISTENCY IN FACILITY MANAGEMENT.
37. GUARANTEE THE INSTALLATION AGAINST DEFECTS IN MATERIALS AND WORKMANSHIP WHICH MAY OCCUR UNDER NORMAL USAGE FOR A PERIOD OF ONE YEAR AFTER OWNER'S ACCEPTANCE. DEFECTS SHALL BE PROMPTLY REMEDIED WITHOUT COST TO THE OWNER.
38. SYSTEMS SHALL BE COMPLETE, OPERABLE, AND READY FOR CONTINUOUS OPERATION. LIGHTS, SWITCHES, RECEPTACLES, MOTORS, ETC. SHALL BE CONNECTED AND OPERABLE.


TAB Associates
*The Architectural Balance*
0056 Edwards Village Blvd.
Suite 210
Edwards, CO 81632
(970) 766-1470
fax: (970) 766-1471
email: tab@vail.net
www.tabassociates.com


Seal

COLORADO LICENSED
MARC A. SACCONI
42215
PROFESSIONAL ENGINEER
4-6-20

# STRAWBERRY PARK ELEMENTARY
## 39620 AMETHYST DRIVE
Steamboat Springs, CO

| Revisions: | | |
|---|---|---|
| No | Description | Date |
| | | |

Issue Dates:
PERMIT SET
04.06.2020

Sheet Title:
ELEC COVER SHEET

Project No:
10182.00

Sheet No:
E0.0


BG BUILDINGWORKS
systems fulfilled
303.278.3820 www.bgbuildingworks.com
Project No. 10182.00 Copyright 2020
ALBUQUERQUE | AVON | DENVER | FORT COLLINS

## KITCHEN EQUIPMENT SCHEDULE

| MARK | DESCRIPTION | VOLT / PHASE | HP / WATTS | AMPS | CONNECTION HARDWIRED | CONNECTION RECEPTACLE | CONNECTION HEIGHT | FEEDER | CIRCUIT | SPECIFIC NOTES |
|---|---|---|---|---|---|---|---|---|---|---|
| 6 | BOOSTER HEATER | 208/3 | 7000 | - | X | - | 12" | 30(3WG) | MN-2,4,6 | |
| 7 | DISH MACHINE | 208/3 | - | 40 | X | - | 24" | 40(3WG) | MN-8,10,12 | |
| 11 | DISPOSAL, 2 HP | 208/1 | - | 9 | - | 6-20R | 12" | 20(3WG) | MN-14,16 | |
| 17 | WORK TABLE | 120/1 | - | 20 | - | 5-20R | 48" | 20(2WG) | SEE PLANS | |
| 22 | REFRIGERATOR, 2 DOOR | 120/1 | - | 10 | - | 5-20R | 36" | 20(2WG) | MN-18 | |
| 23 | MECHANDISER, OPEN AIR | 208/1 | - | 13 | - | 6-20R | 24" | 20(3WG) | MN-20,22 | |
| 24 | ICE MACHINE AND BIN | 120/1 | - | 20 | - | 5-20R | 60" | 20(2WG) | MN-24 | |
| 25 | CABINET, HEATED | 120/1 | - | 20 | - | 5-20R | 24" | 20(2WG) | MN-26 | (1) |
| 26 | DOUBLE STACKED CONVECTION OVEN | 120/1 | - | 20 | - | 5-20R | 24" | 20(2WG) | MN-30 | (1) |
| 27 | STEAMER, 10 PAN | 120/1 | - | 5 | X | - | 24" | 20(2WG) | MN-34 | (1) |
| 31 | EXHAUST HOOD, TYPE 2 | 120/1 | - | 15 | X | - | CLG | 20(2WG) | MN-38 | (1) |
| 33 | SERVING LINE AND BASE | 120/1 | - | 20 | - | 5-20R | 24" | 20(2WG) | MN-42 | |
| 34 | HEAT LAMPS | 120/1 | - | 7 | X | - | CLG | 20(2WG) | SEE PLANS | |

**GENERAL NOTES:**
- A. FIELD VERIFY ALL EQUIPMENT POWER AND CONNECTION REQUIREMENTS WITH KITCHEN CONTRACTOR AND MANUFACTURER'S INFORMATION.
- B. HARD WIRED EQUIPMENT CONNECTIONS SHALL BE SEALTIGHT.
- C. E.C. SHALL COORDINATE ALL CONNECTION POINT LOCATIONS AND RECEPTACLE CONFIGURATIONS WITH THE KITCHEN CONSULTANT. VERIFY EQUIPMENT DISCONNECT REQUIREMENTS PRIOR TO INSTALLATION.
- D. ANY EQUIPMENT UNDER HOOD TIES INTO FIRE SUPPRESSION SYSTEM. PROVIDE SHUNT TRIP CIRCUIT BREAKER TO TURN EQUIPMENT OFF WHEN FIRE SUPPRESSION SYSTEM IS ACTIVATED.
- E. PROVIDE ALL EQUIPMENT DISCONNECTS IN KITCHEN WITH NEMA 3R RATING.
- F. COORDINATE CONTROLS WITH KITCHEN EQUIPMENT VENDOR.

**SPECIFIC NOTES:**
- (1) EQUIPMENT TO TIE INTO FIRE SUPPRESSION SYSTEM. REFER TO DIAGRAM D ON E3.1.
- (2)
- (3)
- (4)

## LUMINAIRE SCHEDULE

**GENERAL NOTES:**

BOF = BOTTOM OF FIXTURE, RFD = RECESSED FIXTURE DEPTH, OFD = OVERALL FIXTURE DEPTH, OFH = OVERALL FIXTURE HEIGHT, TOP = TOP OF POLE, AFF = ABOVE FINISHED FLOOR.

A. THE LUMINAIRE SCHEDULE CAN NOT BE USED INDEPENDENTLY OF THE DRAWINGS AND SPECIFICATIONS TO OBTAIN LUMINAIRE COSTS. THE INDIVIDUAL ESTABLISHING LUMINAIRE COSTS SHALL NOT QUOTE PRICING WITHOUT FIRST SEEING APPLICABLE ELECTRICAL DRAWINGS AND ELECTRICAL DIVISION SPECIFICATIONS. THE CONTRACTOR IS REPONSIBLE FOR PROVIDING NECESSARY DRAWINGS AND SPECIFICATIONS TO THE INDIVIDUAL QUOTING LUMINAIRE PRICING.

B. REFER TO DRAWINGS FOR FIXTURES REQUIRING EMERGENCY BATTERY BACKUP OPTION (SHOWN BY HATCH IN/OVER SYMBOL). MINIMUM LIGHT OUTPUT FOR EM BALLAST SHALL BE 600 LUMENS. BATTERY SHALL OPERATE FOR A MINIMUM OF 90 MINUTES.

C. INTERRUPT POWER SUPPLY TO DEMONSTRATE PROPER OPERATION OF ALL EMERGENCY LIGHTING PRIOR TO JOB COMPLETION.

D. MINIMUM CRI FOR FRONT OF HOUSE LIGHT FIXTURES SHALL BE [90]. MINIMUM CRI FOR BACK OF HOUSE LIGHT FIXTURES SHALL BE [80].

E. ALL FINISHES TO BE REVIEWED AND VERIFIED BY [INTERIOR DESIGNER AND/OR ARCHITECT] PRIOR TO PURCHASE.

F. PROVIDE ALL PARTS, PIECES, AND COMPONENTS NECESSARY FOR A COMPLETE AND FUNCTIONAL SYSTEM. ELECTRICAL CONTRACTOR TO CONFIRM ALL MOUNTING ACCESSORIES PRIOR TO ORDER.

G. CONFIRM DIMMING PROTOCOL WITH FINAL CONTROLS SPECIFICATIONS AND SHOP DRAWINGS. [ALL FRONT OF HOUSE LIGHT FIXTURES TO BE PROVIDED WITH 1% DIMMING RANGE.] ELECTRICAL CONTRACTOR TO VERIFY PRIOR TO ORDER.

H. ELECTRICAL CONTRACTOR TO COORDINATE ALL ACCESS PANELS, DRIVER LOCATIONS, AND TRANSFORMER LOCATIONS WITH ARCHITECT PRIOR TO INSTALLATION.

I. ELECTRICAL CONTRACTOR TO CONFIRM FIXTURE COMPATIBLITY WITH CEILING TYPE AND CEILING THICKNESS PRIOR TO FINAL FIXTURE ORDER.

J. FOR ALL LINEAR FIXTURES, ELECTRICAL CONTRACTOR TO VERIFY EXACT FIXTURE LENGTHS PER FIELD MEASUREMENTS OR MILLWORK SHOP DRAWINGS, AS APPLICABLE.

K. ELECTRICAL CONTRACTOR TO VERIFY FEED AND LENGTH OF LEAD WIRES REQUIRED AND REVISE AS NECESSARY.

L. PROVIDE EXIT SIGN MOUNTING, FACES AND CHEVRONS PER PLANS.

M.FOR ALL DECORATIVE LIGHTING, REFER TO INTERIOR DESIGN DOCUMENTATION FOR FIXTURE MOUNTING HEIGHT.

**SPECIFIC NOTES:**

1. [MOUNT PER PLANS. PENDANT MOUNT AS REQUIRED BELOW DUCTWORK FOR MAXIMIMUM ILLUMINATION OF ROOM SURFACES.]
2. REMOTE DRIVER/TRANSFORMER REQUIRED. DRIVER/TRANSFORMER TO BE LOCATED IN ACCESSIBLE, VENTILATED LOCATION.
3. SEE PLANS FOR CIRCUITING AND [EMERGENCY INVERTER] INFORMATION.
4. COORDINATE AIMING IN FIELD WITH [ARCHITECT AND/OR LIGHTING DESIGNER].
5. [ELECTRICAL CONTRACTOR TO REVIEW FIXTURE WEIGHT AND PROVIDE J-BOX SUITABLE FOR FIXTURE GREATER THAN 50LBS, AS REQUIRED.]
6. [NO MORE THAN 30 TRACK HEADS MAY BE MOUNTED PER TRACK PER CIRCUIT.]

| TYPE | DESCRIPTION | MOUNTING | LAMP / LIGHT SOURCE QTY | TYPE | LUMENS | CRI | CCT | INPUT WATTS | DIMMING | VOLTAGE | MANUFACTURER | CATALOG NUMBER | SPECIFIC NOTES |
|---|---|---|---|---|---|---|---|---|---|---|---|---|---|
| P1 | 16' INDIRECT/DIRECT LINEAR PENDANT | SUSPENDED | 1 | LED | 16000 lm | 80 | 3500 | 128 | 0-10V | 277 | LITHONIA | GRD LLP 16FT MSL4 80CRI 35K ID1000LMF 80/20 MIN1 ZT 277 SCT F1 24F | - |
| P2E | 24' INDIRECT/DIRECT LINEAR PENDANT | SUSPENDED | 1 | LED | 24000 lm | 80 | 3500 | 192 | 0-10V | 277 | LITHONIA | GRD LLP 24FT MSL4 80CRI 35K ID1000LMF 80/20 MIN1 ZT 277 SCT F1 24F | - |
| P5 | 8' LINEAR, WET RATED | SUSPENDED | 1 | LED | 4696 lm | 90 | 3500 | 61 | 0-10V | 277 | LED LINEAR | HD25-90-3500-8'-W-XX-T-IP67-VARIOP ENDANT 4262 | - |
| P6 | 8' INDIRECT/DIRECT LINEAR PENDANT | SUSPENDED | 1 | LED | 8000 lm | 80 | 3500 | 64 | 0-10V | 277 | LITHONIA | GRD LLP 8FT MSL4 80CRI 35K ID1000LMF 80/20 MIN1 ZT 277 SCT F2 24F | - |
| P6E | 8' INDIRECT/DIRECT LINEAR PENDANT | SUSPENDED | 1 | LED | 8000 lm | 80 | 3500 | 64 | 0-10V | 277 | LITHONIA | GRD LLP 8FT MSL4 80CRI 35K ID1000LMF 80/20 MIN1 ZT 277 SCT F2 24F | - |
| R1E | 6" DOWNLIGHT, LED | RECESSED | 1 | LED | 1000 lm | 90 | 3500 | 11 | 0-10V | 277 | LITHONIA | LDN6 35/10 L06WR LD MVOLT EZ10 | - |
| R2 | 2'X4' RECESSED VOLUMETRIC TROFFER, GASKETED | RECESSED | 1 | LED | 6218 lm | 80 | 3500 | 49 | 0-10V | 277 | LITHONIA | 2GTL-4'-60L-GZ10-LP835 | - |
| R2E | 2'X4' RECESSED VOLUMETRIC TROFFER, GASKETED | RECESSED | 1 | LED | 6218 lm | 80 | 3500 | 49 | 0-10V | 277 | LITHONIA | 2GTL-4'-60L-GZ10-LP835 | - |
| R3 | 2'X4' RECESSED VOLUMETRIC TROFFER, GRID | RECESSED | 1 | LED | 6000 lm | 82 | 3500 | 44 | 0-10V | 277 | LITHONIA | 2BLT4 60L ADSM EZ1 LP835 | - |
| R3E | 2'X4' RECESSED VOLUMETRIC TROFFER, GRID | RECESSED | 1 | LED | 6000 lm | 82 | 3500 | 44 | 0-10V | 277 | LITHONIA | 2BLT4 60L ADSM EZ1 LP835 | - |
| R4 | 2'X4' RECESSED VOLUMETRIC TROFFER, GASKETED | RECESSED | 1 | LED | 6000 lm | 82 | 3500 | 44 | 0-10V | 277 | LITHONIA | 2BLT4 60L ADSM EZ1 LP835 | - |
| R4E | 2'X4' RECESSED VOLUMETRIC TROFFER, GASKETED | RECESSED | 1 | LED | 6000 lm | 82 | 3500 | 44 | 0-10V | 277 | LITHONIA | 2BLT4 60L ADSM EZ1 LP835 | - |
| S1 | 4' STRIP | SURFACE | 1 | LED | 5000 lm | 80 | 3500 | 41 | | 277 | LITHONIA | ZL1D-L24-3500LM-FST-MVOLT-35K-80 CRI-WH | |
| S2 | 2' STRIP | SURFACE | 1 | LED | 3500 lm | 80 | 3500 | 36 | | 277 | LITHONIA | ZL1D-L48-3500LM-FST-MVOLT-35K-80 CRI-WH | |
| S3 | 4' SURFACE LINEAR | SURFACE | 1 | LED | 6000 lm | 82 | 3500 | 53 | 0-10V | 277 | LITHONIA | STL4 60L EZ1 LP835 | - |
| S4 | 1'X4' LED FLAT PANEL | SURFACE | 0 | LED | 3300 lm | 80 | 3500 | 28 | NA | 277 | LITHONIA | CPANL 1X4 33LM 35 K M4 | - |
| W1E | 3' VANITY | WALL | 1 | LED | 2650 lm | 90 | 3500 | 36 | 0-10V | 277 | LITHONIA | FMVCCLS-36IN-MVOLT-35K-90-XX | - |
| W2 | 4' WALL MOUNTED LINEAR | WALL | 1 | LED | 6000 lm | 82 | 3500 | 53 | 0-10V | 277 | LITHONIA | STL4 60L EZ1 LP835 | - |
| X1 | EXIT, GREEN LETTERS | SURFACE | 1 | LED | | 0 | | 1 | NA | 277 | LITHONIA | LQM S W 3 G 120/277 EL N | - |
| ZW1E | EXTERIOR LED WALL PACK | SURFACE | 1 | LED | 4300 lm | 75 | 5000 | 44 | NA | 277 | LITHONIA | OLW-31 | - |

## TRANSFORMER SCHEDULE

| SIZE (KVA) | PRIMARY (480V, 3Ø, 3W) FLA | OCPD | FEEDER | SECONDARY (208V, 3Ø, 4W) FLA | OCPD | FEEDER COPPER | FEEDER ALUMINUM | GROUNDING ELECTRODE CONDUCTOR | DIMENSIONS (IN.) HEIGHT | WIDTH | DEPTH | HEAT LOSS (W) | WEIGHT (LBS.) |
|---|---|---|---|---|---|---|---|---|---|---|---|---|---|
| 150 | 180 | 250A3P | 250(3WG) | 416 | 600A3P | 2[(4-350 KCMIL & 1#1/0 G) 2-1/2"C] | 2[(4-500 KCMIL & 1#1/0 G) 3"C] | 1-#1/0 | 49.1 | 33.65 | 28.45 | 3402 | 1270 |

GENERAL NOTES:
- A. PRIMARY OVERCURRENT PROTECTION PER N.E.C. TABLE 450.3(B).
- B. SECONDARY OVERCURRENT PROTECTION PER N.E.C. TABLE 450.3(B).
- C. BONDING AND GROUNDING CONDUCTOR PER N.E.C. TABLE 250.66.
- D. GROUNDING ELECTRODE CONDUCTORS ARE SIZED BASED ON COPPER CONDUCTORS.
- E. SEE PLANS FOR INCREASED CONDUCTOR SIZES DUE TO VOLTAGE DROP.
- F. CONDUIT SIZES ARE BASED ON NEC TABLE 4 (EMT) AND TABLE 5 (THHN INSULATION).
- G. DIMENSIONS AND WEIGHT FOR 15KVA TRANSFORMERS AND LARGER ARE BASED ON SQUARE D 2016 DOE ENERGY EFFICIENT TYPE, 150 DEGREE C RISE, WITH COPPER WINDINGS.

## MECHANICAL EQUIPMENT SCHEDULE

| WT | MARK | ELECTRICAL INFORMATION VOLTAGE | POLES | HP | FLA | MCA | MOCP | STARTER | DISCONNECT | FEEDER | CIRCUIT INFORMATION PANEL | CIRCUIT | NOTES |
|---|---|---|---|---|---|---|---|---|---|---|---|---|---|
| AHU | 2 | 208 V | 3 | - | 14.0 | 17.5 | 30 | - | 30/3 DISCONNECT SWITCH WITH 30A/3 FUSE | 30(3WG) | MN | 61,63,65 | - |
| CU | 1 | 208 V | 3 | - | - | 65.6 | 90 | - | 100/3 FUSED DISCONNECT SWITCH WITH 90/3 FUSE | 90(3WG) | MN | 55,57,59 | - |
| EF | 1 | 120 V | 1 | - | 2.167 | - | 20 | - | 1P MOTOR RATED SWITCH | 20(2WG) | MN | 43 | - |
| EF | 2 | 120 V | 1 | - | 0.858 | - | 15 | - | 1P MOTOR RATED SWITCH | 20(2WG) | LSA | 73 | - |
| EF | 3 | 120 V | 1 | - | 0.842 | - | 20 | - | 1P MOTOR RATED SWITCH | 20(2WG) | MN | 45 | - |
| EF | 4 | 120 V | 1 | - | 0.108 | - | 20 | - | 1P MOTOR RATED SWITCH | 20(2WG) | MN | 35 | - |
| KEF | 1 | 208 V | 2 | 3/4 | - | - | 20 | - | 1P MOTOR RATED SWITCH | 20(2WG) | MN | 49,51 | - |
| KEF | 2 | 120 V | 1 | 1/4 | - | - | 20 | - | 1P MOTOR RATED SWITCH | 20(2WG) | MN | 53 | - |

## SHORT CIRCUIT / VOLTAGE DROP CALCULATION SUMMARY

| POINT | TAG | VOLTAGE / PHASE | LENGTH (FT) | COPPER / ALUMINUM | CONDUIT | WIRE SIZE | # OF SETS | FEEDER VOLTAGE DROP (%) | TOTAL VOLTAGE DROP (%) | Isc AVAILABLE UPSTREAM | Isc (FAULT) |
|---|---|---|---|---|---|---|---|---|---|---|---|
| F1 | (E) MAIN SWITCHBOARD | 480V, 3Ø | 15 | C | S | 350 | 4 | 0.1% | 0.1% | 10,472 | 10,397 |
| F2 | (N) 'TMN' DISC | 480V, 3Ø | 95 | C | N | 250 | 1 | 0.3% | 0.4% | 10,397 | 8,725 |
| F3 | (N) PRI-TMN | 480V, 3Ø | 5 | C | S | 250 | 1 | 0.0% | 0.4% | 8,725 | 8,642 |
| F4 | (N) SEC-TMN | 208V, 3Ø | | C | S | | | 0.0% | 0.0% | 11,611 | 11,611 |
| F5 | (N) PANEL 'MN' | 208V, 3Ø | 5 | C | S | 350 | 2 | 0.0% | 0.0% | 11,611 | 11,470 |

** PER THE UTILITY, THE MAXIMUM AVAILABLE (SYMMETRICAL) FAULT AT THE SECONDARY SIDE OF THE SERVICE TRANSFORMER IS 10,472 AMPS, ASSUMING A 500 KVA TRANSFORMER. SHORT CIRCUIT CALCULATIONS ARE FURNISHED FOR ALL FAULT LEVELS ABOVE 10,000 AMPS @ 208 VOLT (14,000 AT 480 VOLT). ANY FAULT CURRENT BELOW THIS LEVEL IS CONSIDERED SAFE FOR THE ELECTRICAL SYSTEM TO CLEAR OR EQUIPMENT IS BUILT TO WITHSTAND THIS LEVEL OF FAULT SAFELY.

## LIGHTING CONTROL DEVICES

| TYPE | DESCRIPTION | PROGRAMMING REQUIREMENTS | COMMENTS | NOTES |
|---|---|---|---|---|
| | STAND ALONE SWITCH DEVICES | | | |
| $ | LINE VOLTAGE TOGGLE SWITCH, SINGLE POLE | MANUAL ON, MANUAL OFF | | |
| | AUTOMATIC STAND ALONE CONTROL DEVICES | | | |
| SO2 | CEILING MOUNTED, DUAL TECH OCCUPANCY SENSOR | AUTOMATIC ON, AUTOMATIC OFF AFTER 15 MINUTES OF UNOCCUPIED SPACE. LOCAL ON/OFF OVERRIDE BUTTON (SEE DEVICES BELOW) | EC SHALL COORDINATE MOUNTING SUCH THAT SENSOR IS NOT WITHIN 6' OF AIR RETURN SYSTEMS. MANUAL ON SWITCHES TO BE LOW VOLATE AND COMPATIBLE WITH CEILING SENSOR. | |
| SO1 | CEILING MOUNTED, DUAL TECH HALLWAY OCCUPANCY SENSOR | AUTOMATIC ON, AUTOMATIC OFF AFTER 15 MINUTES OF UNOCCUPIED SPACE. NO LOCAL OVERRIDE | EC SHALL COORDINATE MOUNTING SUCH THAT SENSOR IS NOT WITHIN 6' OF AIR RETURN SYSTEMS. MANUAL ON SWITCHES TO BE LOW VOLATE AND COMPATIBLE WITH CEILING SENSOR. | |
| SV1 | WALL MOUNT, DUAL TECH, VACANCY SENSOR, SET TO VACANCY MODE, SINGLE POLE | MANUAL ON, AUTOMATIC OFF AFTER 15 MINUTES OF UNOCCUPIED SPACE. | | |
| SK1 | KEYED LOW VOLTAGE PUSH BUTTON WALL STATION, TWO BUTTON | KEYED. MANUAL ON OPERATION WHEN KEY ENGAGED, AUTOMATIC OFF VIA ROOM SENSOR (SEE ADDITIONAL DEVICES ABOVE) | | |
| | ROOM CONTROLLER SYSTEMS | | | |
| RO1 | ROOM CONTROLLER CEILING MOUNTED OCCUPANCY SENSOR, DUAL TECH, LOW VOLTAGE | MANUAL ON VIA LOCAL PUSH BUTTON, OFF AFTER 15 MINUTES OF UNOCCUPIED SPACE | EC SHALL COORDINATE MOUNTING SUCH THAT SENSOR IS NOT WITHIN 6' OF AIR RETURN SYSTEMS | |
| RP1 | ROOM CONTROLLER CLOSED LOOP DAYLIGHT SENSOR | LIGHT-LEVEL MONITORING RANGE: 10 TO 100 FC WITH AN ADJUSTMENT TO TURN-ON AND TURN-OFF LIGHTS AT FOOTCANDLE LEVELS WITHIN THAT RANGE. TIME DELAY: FIFTEEN SECOND MINIMUM, TO PREVENT FALSE OPERATION. MAINTAIN 30 FC AT WORKING SURFACE. PHOTOCELL MUST DIM LIGHTS CONTINUOUSLY TO AT LEAST 15% MINIMUM | AND A DIRECTIONAL LENS IN FRONT OF THE PHOTOCELL TO PREVENT FIXED LIGHT SOURCES FROM CAUSING UNINTENTIONAL SHUT-OFF. SENSOR SHALL NOT BE LOCATED IN CLOSE PROXIMITY TO INDIRECT LIGHTING OR WHERE SUBJECT TO VEILING REFLECTIONS FROM GLASS OR WATER SURFACES | |
| RK1 | ROOM CONTROLLER, TWO ZONE, MANUAL LOW VOLTAGE PUSH BUTTON KEYPAD WITH RAISE LOWER | MANUAL ON. SHALL BE COMPATIBLE FOR 1% SMOOTH DIMMING UNLESS OTHERWISE NOTED, **[ELV, MLV, 0-10V, ETC]** DIMMING | | |
| RK2 | ROOM CONTROLLER, FIVE ZONE, MANUAL LOW VOLTAGE PUSH BUTTON KEYPAD WITH RAISE LOWER | MANUAL ON. SHALL BE COMPATIBLE FOR 1% SMOOTH DIMMING UNLESS OTHERWISE NOTED, **[ELV, MLV, 0-10V, ETC]** DIMMING | | |
| RK3 | ROOM CONTROLLER, FOUR ZONE, MANUAL LOW VOLTAGE PUSH BUTTON KEYPAD WITH RAISE LOWER | MANUAL ON. SHALL BE COMPATIBLE FOR 1% SMOOTH DIMMING UNLESS OTHERWISE NOTED, **[ELV, MLV, 0-10V, ETC]** DIMMING | | |
| RA | ROOM CONTROLLER DEVICE | | PROVIDE QUANTITIES AS REQUIRED PER MANUFACTURER. | |

GENERAL NOTES:

A. APPROVED STANDALONE LIGHTING CONTROLS TO BE PROVIDED BY ONE OF THE FOLLOWING PRE-APPROVED MANUFACTURERS.
a. LUTRON
b. WATTSTOPPER
c. SENSOR SWITCH
d. LEVITON
e. NLIGHT
f. CRESTRON
g. EATON

B. ALL MANUALLY DIMMED LIGHTING LOADS SHALL BE CAPABLE OF DIMMING LIGHTS TO OFF SETTING. DIMMING COMPATIBLITY BETWEEN THE CONTROLS AND LIGHT FIXTURES SHALL BE COORDINATED BY THE EC TO ENSURE THAT LIGHTING IS ABLE TO DIM, WITH NO VISIBLE FLICKER, TO THE LEVEL NOTED ON THE LIGHTING FIXTURE SCHEDULE.

C. FINAL OCCUPANCY AND DAYLIGHT SENSOR LOCATIONS SHALL BE PROVIDED BY MANUFACTURER AND LOCATED PER APPROVED SHOP DRAWINGS. LOCATIONS INDICATED IN THERE DRAWING SHALL BE REVIEWED AND ALTERED AS NECESSARY FOR CORRECT OPERATION BY MANUFACTURER. IF OPERATION OF SENSOR DOES NOT MEET THE INTENT OUTLINED IN THESE DOCUMENTS, THE MANUFACTURER REPRESENTATIVE SHALL PROVIDE FIELD RECTIFICATION SERVICES AS NECESSARY IN ORDER TO RECONFIGURE SYSTEM TO MEET THE DESIGN INTENT.

D. ALL DEVICE FINISHES TO BE REVIEWED AND APPROVED BY ARCHITECT AND/OR INTERIOR DESIGNER PRIOR TO PURCHASE.

E. REFER TO DRAWINGS FOR SWITCH TYPE QUANTITIES AND LOCATIONS.

F. PROVIDE POWER PACKS AND ROOM CONTROLLERS AS NECESSARY

G. PLANS WITHIN DRAWINGS ARE PROVIDED TO COMMUNICATE DESIGN INTENT. SYSTEM SHALL BE WIRED AND PROGRAMMED ACCORDING TO APPROVED SHOP DRAWINGS

H. SHOP DRAWINGS SHALL BE SUBMITTED TO AND REVIEWED BY BG BUILDINGWORKS PRIOR TO PURCHASE

I. CONGREGATE ADJACENT DEVICES UNDER A SINGLE FACEPLATE. ACCOUNT FOR WATTAGE RESTRICTIONS WHERE REQUIRED

J. ALL CALIBRATION DEVICES SHALL BE READILY ACCESSIBLE

K. LIGHT LEVEL SETTINGS/PROGRAMMING SHALL BE REVIEWED AND ADJUSTED WITH OWNER SUPERVISION IN FIELD AFTER INSTALLATION AND PRIOR TO COMMISSIONING AS REQUIRED

L. COMMSSIONING SHALL BE PROVIDED IN ACCORDANCE WITH SCHOOL DISTRICT REQUIREMENTS AND THE IECC.

M. REFER TO LOW VOLTAGE DEVICE SCHEDULE FOR INITIAL PROGRAM SETTINGS AND SCENE SELECTION

N. ALL AUTOMATIC SENSING DEVICES SHALL BE SELF LEARNING TO MITIGATE NUISANCE TRIPPING

O. PROVIDE CLEANING AND MAINTAINENCE OVERRIDES PER THE REQUIREMENTS OF IECC. PROVIDE TWO HOUR OVERRIDE FOR KEYPAD DEVICES

SPECIFIC NOTES:
1. MOUNT PER MANUFACTURER RECOMMENDATIONS TO ENSURE PROPER PERFORMANCE.
2. TO BE REVIEWED WITH FINAL LIGHT FIXTURE SELECTION TO ENSURE COMPATIBILITY AND DIMMABILITY PER ABOVE NOTES.
3. MOUNT FACING NORTH TO AVOID NUISANCE TRIPPING
4. SEE POWER PLANS FOR CONTROLLED RECEPTACLE LOCATIONS
5. DEMAND RESPONSE AND LOAD SHEDDING CAPABILITY
6. AS LED LUMEN OUTPUT DECLINES, DIM FIXTURES UP TO PROVIDE FIXTURE LUMEN MAINTAINENCE AND MAINTAIN INITIAL FOOTCANDLE LEVEL
7. INTEGRATE WITH WINDOW SHADES AND BLINDS

## WIRING SCHEDULE - COPPER

| AMPS | (2WG) 1Ø, 2 WIRE, GROUND | (3WG) 1Ø, 3 WIRE, GROUND OR 3Ø, 3 WIRE, GROUND | (4WG) 3Ø, 4 WIRE, GROUND |
|---|---|---|---|
| 20 | (2#12 & 1#12 G) 3/4"C | (3#12 & 1#12 G) 3/4"C | (4#12 & 1#12 G) 3/4"C |
| 30 | (2#10 & 1#10 G) 3/4"C | (3#10 & 1#10 G) 3/4"C | (4#10 & 1#10 G) 3/4"C |
| 40 | (2#8 & 1#10 G) 3/4"C | (3#8 & 1#10 G) 3/4"C | (4#8 & 1#10 G) 3/4"C |
| 50 | (2#6 & 1#10 G) 3/4"C | (3#6 & 1#10 G) 3/4"C | (4#6 & 1#10 G) 1"C |
| 60 | (2#4 & 1#10 G) 3/4"C | (3#4 & 1#10 G) 1"C | (4#4 & 1#10 G) 1 1/4"C |
| 70 | (2#4 & 1#8 G) 3/4"C | (3#4 & 1#8 G) 1"C | (4#4 & 1#8 G) 1 1/4"C |
| 80 | (2#3 & 1#8 G) 1"C | (3#3 & 1#8 G) 1"C | (4#3 & 1#8 G) 1 1/4"C |
| 90 | (2#2 & 1#8 G) 1"C | (3#2 & 1#8 G) 1 1/4"C | (4#2 & 1#8 G) 1 1/4"C |
| 100 | (2#3 & 1#8 G) 1"C | (3#3 & 1#8 G) 1 1/4"C | (4#3 & 1#8 G) 1 1/4"C |
| 110 | (2#2 & 1#6 G) 1"C | (3#2 & 1#6 G) 1 1/4"C | (4#2 & 1#6 G) 1 1/4"C |
| 125 | (2#1 & 1#6 G) 1 1/4"C | (3#1 & 1#6 G) 1 1/2"C | (4#1 & 1#6 G) 1 1/2"C |
| 150 | (2#1/0 & 1#6 G) 1 1/4"C | (3#1/0 & 1#6 G) 1 1/2"C | (4#1/0 & 1#6 G) 1 1/2"C |
| 175 | (2#2/0 & 1#6 G) 1 1/4"C | (3#2/0 & 1#6 G) 1 1/2"C | (4#2/0 & 1#6 G) 2"C |
| 200 | (2#3/0 & 1#6 G) 1 1/4"C | (3#3/0 & 1#6 G) 2"C | (4#3/0 & 1#6 G) 2"C |
| 225 | (2#4/0 & 1#4 G) 1 1/2"C | (3#4/0 & 1#4 G) 2"C | (4#4/0 & 1#4 G) 2 1/2"C |
| 250 | (2-250 KCMIL & 1#4 G) 2"C | (3-250 KCMIL & 1#4 G) 2"C | (4-250 KCMIL & 1#4 G) 2 1/2"C |
| 300 | (2-350 KCMIL & 1#4 G) 2"C | (3-350 KCMIL & 1#4 G) 2 1/2"C | (4-350 KCMIL & 1#4 G) 2 1/2"C |

CONDUCTOR SIZES ARE BASED ON 60° TERMINATIONS LESS THAN 100A AND 75° TERMINATIONS GREATER THAN OR EQUAL TO 100A, NEC TABLE 310.12(B)(16).

CONDUIT SIZES ARE BASED ON NEC TABLE 4 (EMT) AND TABLE 5 (THHN INSULATION).

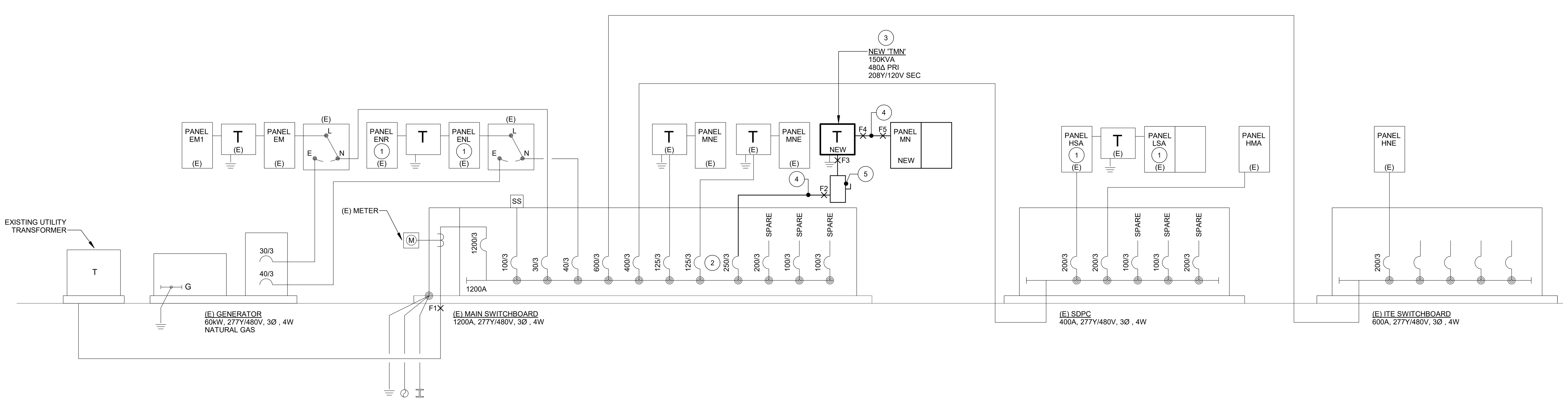


ELECTRICAL PARTIAL ONE LINE DIAGRAM CB

NO SCALE

## FLAG NOTES:

1. METER PANEL FOR 30-DAYS PER NEC 220.87 TO DETERMINE AVILABLE LOAD CAPACITY. IT IS ASSUMED AT TIME OF ISSUANCE THIS PANEL HAS SUFFICIENT CAPACITY FOR ADDED LOADS. ELECTRICAL CONTRACTOR TO PROVIDE ELECTRICAL ENGINEER WITH METERED DATA PRIOR TO INSTALLATION OF ELECTRICAL SYSTEMS TO VERIFY SUFFICIENT CAPACITY IN PANEL.
2. REMOVE EXISTING 200/3 SPARE CIRCUIT BREAKER. REPLACE WITH 250/3 CIRCUIT BREAKER TO FEED TRANSFORMER 'TMN'.
3. TRANSFORMER TO BE SUSPENDED FROM STRUCTURE ON STEEL FRAME IN ACCESSIBLE CEILING CAVITY. PROVIDE VIBRATION ISOLATION. MAINTAIN CODE REQUIRED EQUIPMENT AND WORKING CLEARANCES. COORDINATE TRANSFORMER WEIGHT AND MOUNTING WITH STRUCTURAL ENGINEER.
4. REFER TO TRANSFORMER SCHEDULE ON THIS SHEET FOR FEEDER SIZE.
5. PROVIDE 200A NON-FUSED DISCONNECT SWITCH ON THE PRIMARY SIDE OF THE TRANSFORMER.


TAB Associates
*The Architectural Balance*
0056 Edwards Village Blvd.
Suite 210
Edwards, CO 8132
(970) 766-1470
fax: (970) 766-1471
email: tab@vail.net
www.tabassociates.com


Seal

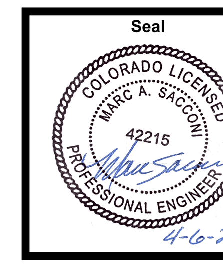


**STRAWBERRY PARK ELEMENTARY**
**39620 AMETHYST DRIVE**
**Steamboat Springs, CO**

| Revisions: No | Description | Date |
|---|---|---|

Issue Dates:
PERMIT SET
04.06.2020

Sheet Title:
ELECTRICAL SCHEDULES

Project No:
10182.00

Sheet No:
E0.1


BG BUILDINGWORKS
systems fulfilled
303.278.3820 www.bgbuildingworks.com
Project No. 10182.00 Copyright 2020
ALBUQUERQUE | AVON | DENVER | FORT COLLINS

## Branch Panel: MN

**Location:** (E) MECH A12
**Supply From:** XFMR-TMN
**Mounting:** SURFACE
**Enclosure:** Type 1

**Volts:** 120/208 Wye
**Phases:** 3
**Wires:** 4

**A.I.C. Rating:** 22,000
**Bus Rating** 600A
**MLO or MCB:** MCB
**MCB Rating:** 600 A

| NO. | LOAD DESCRIPTION | TYPE | POLE | TRIP | A | B | C | TRIP | POLE | TYPE | LOAD DESCRIPTION | NO. |
|---|---|---|---|---|---|---|---|---|---|---|---|---|
| 1 | DD ACCESS CONTROL | R | 1 | 20 A | 360 | 2333 | | | | | | 2 |
| 3 | CAFETERIA RCPT | R | 1 | 20 A | | 540 | 2333 | 20 A | 3 | Power | BOOSTER HEATER | 4 |
| 5 | CAFETERIA EWC | R | 1 | 20 A | | | 540 2333 | | | | | 6 |
| 7 | CAFETERIA EWC | R | 1 | 20 A | 540 | 4798 | | | | | | 8 |
| 9 | CAFETERIA EWC | R | 1 | 20 A | | 540 | 4798 | 40 A | 3 | Power | DISH MACHINE | 10 |
| 11 | EXTERIOR RCPT | R | 1 | 20 A | | | 720 4798 | | | | | 12 |
| 13 | ART RCPT | R | 1 | 20 A | 1080 | 936 | | 20 A | 2 | Power | DISPOSAL | 14 |
| 15 | COUNTER TOP RCPT | R | 1 | 20 A | | 720 | 936 | | | | | 16 |
| 17 | PROJECTOR RCPT | R | 1 | 20 A | | | 360 1200 | 20 A | 1 | Power | REFRIGERATOR | 18 |
| 19 | MUSIC RCPT | R | 1 | 20 A | 720 | 1352 | | 20 A | 2 | Power | MERCHANDISER | 20 |
| 21 | MUSIC RCPT | R | 1 | 20 A | | 1080 | 1352 | | | | | 22 |
| 23 | PROJECT RCPT | R | 1 | 20 A | | | 180 2400 | 20 A | 1 | Power | ICEMACHINE | 24 |
| 25 | CONV RCPTS | R | 1 | 20 A | 900 | 2400 | | 20 A | 1 | Power | HEATED CABINET | 26 |
| 27 | KILN | R | 2 | 50 A | | 5200 | 0 | -- | -- | -- | SHUNT TRIP | 28 |
| 29 | | | | | | | 5200 2400 | 20 A | 1 | Power | CONVECTION OVEN | 30 |
| 31 | KILN PLUG EXHAUST | R | 1 | 20 A | 360 | 0 | | -- | -- | -- | SHUNT TRIP | 32 |
| 33 | STG RCPT | R | 1 | 20 A | | 720 | 600 | 20 A | 1 | Power | STEAMER | 34 |
| 35 | RR RCPT, EF-4 | R; M | 1 | 20 A | | | 203 0 | -- | -- | -- | SHUNT TRIP | 36 |
| 37 | CAF PROJECTOR | R | 1 | 20 A | 439 | 1800 | | 20 A | 1 | E | EXHAUST HOOD | 38 |
| 39 | CAF MOT SCREEN | R | 1 | 20 A | | 288 | 0 | -- | -- | -- | SHUNT TRIP | 40 |
| 41 | ART HAND DRYER | R | 1 | 20 A | | | 1000 4800 | 20 A | 1 | Power | SERVING LINE | 42 |
| 43 | EF-1 | M | 1 | 20 A | 455 | 840 | | 20 A | 1 | E | HEAT LAMP | 44 |
| 45 | EF-3 | M | 1 | 20 A | | 177 | 840 | 20 A | 1 | E | HEAT LAMP | 46 |
| 47 | Spare | -- | 1 | 20 A | | | 0 840 | 20 A | 1 | E | HEAT LAMP | 48 |
| 49 | KEF-1 | M | 2 | 20 A | 637 | 1680 | | 20 A | 1 | E | HEAT LAMP | 50 |
| 51 | | | | | | 637 | 360 | 20 A | 1 | R | CONV RCPT | 52 |
| 53 | KEF-2 | M | 1 | 20 A | | | 1218 360 | 20 A | 1 | R | CONV RCPT | 54 |
| 55 | | | | | 13645 | 180 | | 20 A | 1 | R | CONV RCPT | 56 |
| 57 | CU-1 | M | 3 | 90 A | | 13645 | 360 | 20 A | 1 | R | CONV RCPTS | 58 |
| 59 | | | | | | | 13645 180 | 20 A | 1 | R | POS | 60 |
| 61 | | | | | 3640 | 0 | | -- | -- | -- | Space | 62 |
| 63 | AHU-2 | M | 3 | 30 A | | 3640 | 0 | -- | -- | -- | Space | 64 |
| 65 | | | | | | | 3640 0 | -- | -- | -- | Space | 66 |
| 67 | ROOF RCPT | R | 1 | 20 A | 540 | 0 | | -- | -- | -- | Space | 68 |
| 69 | Spare | -- | 1 | 20 A | | 0 | 0 | -- | -- | -- | Space | 70 |
| 71 | Spare | -- | 1 | 20 A | | | 0 0 | -- | -- | -- | Space | 72 |
| 73 | Spare | -- | 1 | 20 A | 0 | 0 | | -- | -- | -- | Space | 74 |
| 75 | Spare | -- | 1 | 20 A | | 0 | 0 | -- | -- | -- | Space | 76 |
| 77 | Spare | -- | 1 | 20 A | | | 0 0 | -- | -- | -- | Space | 78 |
| 79 | Spare | -- | 1 | 20 A | 0 | 0 | | -- | -- | -- | Space | 80 |
| 81 | Spare | -- | 1 | 20 A | | 0 | 0 | -- | -- | -- | Space | 82 |
| 83 | Spare | -- | 1 | 20 A | | | 0 0 | -- | -- | -- | Space | 84 |
| | | | | | A | B | C | | | | | |
| | | | | Total Load: | 39635 VA | 38766 VA | 46017 VA | | | | | |
| | | | | Total Amps: | 331 A | 323 A | 385 A | | | | | |

| LOAD CLASSIFICATION | FEEDER SUBTOTAL | DEMAND FACTOR | FEEDER TOTAL |
|---|---|---|---|
| Lighting | 0 VA | 125% | 0 VA |
| Receptacles | 23647 VA | Per Nec 220 | 16824 VA |
| Motors | 55001 VA | Per NEC 430.24 | 65235 VA |
| Equipment | 6000 VA | 100% | 6000 VA |
| Appliances | 0 VA | Per NEC 220.56 | 0 VA |

**PANEL TOTALS**
**TOTAL LOAD:** 127.8 kVA
**TOTAL CURRENT:** 355 A

**Notes:**

## PANEL: EM

**LOCATION:**
**MOUNTING:** SURFACE

**VOLTAGE:** 277/480V, 3PH, 4W
**MINIMUM BUS:** 100
**MAIN:** MLO
**MINIMUM AIC:** EXISTING

| NO. | LOAD A | LOAD B | LOAD C | TYPE | LOAD DESCRIPTION | BREAKER POLE | BREAKER TRIP | BUS A | BUS B | BUS C | BREAKER TRIP | BREAKER POLE | TYPE | LOAD DESCRIPTION | LOAD A | LOAD B | LOAD C | NO. |
|---|---|---|---|---|---|---|---|---|---|---|---|---|---|---|---|---|---|---|
| 1 | 3324 | | | E | EXISTING LOAD | 3 | 15 | * | | | 20 | 1 | L | (E) EXISTING LOAD | 3324 | | | 2 |
| 3 | | 3324 | | E | -- | - | - | | * | | 20 | 1 | L | (E) EXISTING LOAD | | 3324 | | 4 |
| 5 | | | 3324 | E | -- | - | - | | | * | 20 | 1 | L | (E) EXISTING LOAD | | | 3324 | 6 |
| 7 | 3324 | | | E | (E) LOAD | 1 | 20 | * | | | 20 | 1 | L | (E) EXISTING LOAD | 3000 | | | 8 |
| 9 | | 3324 | | E | (E) LOAD | 1 | 20 | | * | | 20 | 1 | E | (E) EXISTING LOAD | | 3324 | | 10 |
| 11 | | | 820 | L | (1) NEW EM LIGHTING | 1 | 20 | | | * | 20 | 1 | L | (1) NEW EM LIGHTING | | | 132 | 12 |
| 13 | | | | | SPACE | - | - | * | | | - | - | | SPACE | | | | 14 |
| 15 | | | | | SPACE | - | - | | * | | - | - | | SPACE | | | | 16 |
| 17 | | | | | SPACE | - | - | | | * | - | - | | SPACE | | | | 18 |

| LOAD TYPE | PANEL TOTAL | FEED THRU TOTAL | SUBFEED TOTAL | FEEDER SUBTOTAL | DEMAND | FEEDER TOTAL |
|---|---|---|---|---|---|---|
| (L) LIGHTING | 13924 | | | 13924 | 125% | 17405 |
| (R) RECEPTACLES | 0 | | | 0 | NEC 220 | 0 |
| (LM) LARGEST MOTOR | 0 | | | 0 | 25% | 0 |
| (M) MOTORS (ALL) | 0 | | | 0 | 100% | 0 |
| (E) EQUIPMENT | 19944 | | | 19944 | 100% | 19944 |
| (A) APPLIANCES | 0 | | | 0 | 0 | 0 |

**PANEL TOTAL (KVA):** 37.3
**PANEL TOTAL (A):** 45

**GENERAL NOTES:**
A
B
C
D
E

**SPECIFIC NOTES:**
(1) NEW LOAD ON EXISTING BREAKER
(2)
(3)
(4)
(5)

## PANEL: HNE

**LOCATION:**
**MOUNTING:**

**VOLTAGE:** 277/480V, 3PH, 4W
**MINIMUM BUS:** 225
**MAIN:** MLO
**MINIMUM AIC:** EXISTING

| NO. | LOAD A | LOAD B | LOAD C | TYPE | LOAD DESCRIPTION | BREAKER POLE | BREAKER TRIP | BUS A | BUS B | BUS C | BREAKER TRIP | BREAKER POLE | TYPE | LOAD DESCRIPTION | LOAD A | LOAD B | LOAD C | NO. |
|---|---|---|---|---|---|---|---|---|---|---|---|---|---|---|---|---|---|---|
| 1 | 3000 | | | E | (E) LOAD | 1 | 20 | * | | | 20 | 1 | E | (E) LOAD | 3000 | | | 2 |
| 3 | | 3000 | | E | (E) LOAD | 1 | 20 | | * | | 20 | 1 | E | (E) LOAD | | 3000 | | 4 |
| 5 | | | 3000 | E | (E) LOAD | 1 | 20 | | | * | 20 | 1 | E | (E) LOAD | | | 3000 | 6 |
| 7 | | | | E | (E) SPARE | 1 | 20 | * | | | 20 | 1 | E | (E) SPARE | 3000 | | | 8 |
| 9 | | | | E | (E) SPARE | 1 | 20 | | * | | 20 | 1 | E | (E) SPARE | | 3000 | | 10 |
| 11 | | | 1437 | L | (1) LIGHTING | 1 | 20 | | | * | | | | SPACE | | | | 12 |
| 13 | 3000 | | | E | (E) LOAD | 1 | 20 | * | | | 20 | 1 | E | (E) LOAD | 3000 | | | 14 |
| 15 | | | | | (1) SPARE | 1 | 20 | | * | | | | | SPACE | | | | 16 |
| 17 | | 3000 | | E | (E) LOAD | 1 | 20 | | | * | 20 | 1 | E | (E) LOAD | | 3000 | | 18 |
| 19 | 3000 | | | E | (E) LOAD | 1 | 20 | * | | | 20 | 1 | E | (E) LOAD | 3000 | | | 20 |
| 21 | | 3000 | | E | (E) LOAD | 1 | 20 | | * | | 20 | 1 | E | (E) LOAD | | 3000 | | 22 |
| 23 | | | 3000 | E | (E) LOAD | 1 | 20 | | | * | 20 | 1 | E | (E) LOAD | | | 3000 | 24 |

| LOAD TYPE | PANEL TOTAL | FEED THRU TOTAL | SUBFEED TOTAL | FEEDER SUBTOTAL | DEMAND | FEEDER TOTAL |
|---|---|---|---|---|---|---|
| (L) LIGHTING | 1437 | | | 1437 | 125% | 1796 |
| (R) RECEPTACLES | 0 | | | 0 | NEC 220 | 0 |
| (LM) LARGEST MOTOR | 0 | | | 0 | 25% | 0 |
| (M) MOTORS (ALL) | 0 | | | 0 | 100% | 0 |
| (E) EQUIPMENT | 54000 | | | 54000 | 100% | 54000 |
| (A) APPLIANCES | 0 | | | 0 | 0 | 0 |

**PANEL TOTAL (KVA):** 55.8
**PANEL TOTAL (A):** 67

**GENERAL NOTES:**
A
B
C
D
E

**SPECIFIC NOTES:**
(1) NEW LOAD ON EXISTING BREAKER
(2)
(3)
(4)
(5)

## PANEL: LSA SECT 2

**LOCATION:**
**MOUNTING:**

**VOLTAGE:** 120/208V, 3PH, 4W
**MINIMUM BUS:** 400
**MAIN:** MLO
**MINIMUM AIC:** EXISTING

| NO. | LOAD A | LOAD B | LOAD C | TYPE | LOAD DESCRIPTION | BREAKER POLE | BREAKER TRIP | BUS A | BUS B | BUS C | BREAKER TRIP | BREAKER POLE | TYPE | LOAD DESCRIPTION | LOAD A | LOAD B | LOAD C | NO. |
|---|---|---|---|---|---|---|---|---|---|---|---|---|---|---|---|---|---|---|
| 43 | | | | E | (E) LOAD | 1 | 20 | * | | | 20 | 2 | E | (E) LOAD | | | | 44 |
| 45 | | | | E | (E) LOAD | 1 | 20 | | * | | - | - | E | - | | | | 46 |
| 47 | | | | E | (E) LOAD | 1 | 20 | | | * | 20 | 1 | E | (E) LOAD | | | | 48 |
| 49 | | | | | (E) SPACE | | | * | | | 20 | 3 | E | (E) LOAD | | | | 50 |
| 51 | | | | E | (E) LOAD | 1 | 20 | | * | | - | - | E | - | | | | 52 |
| 53 | | | 500 | E | (1) SMARTBOARD | 1 | 20 | | | * | - | - | E | - | | | | 54 |
| 55 | 540 | | | R | (1) CNTR RCPT | | | * | | | 20 | 2 | E | (E) LOAD | | | | 56 |
| 57 | | 750 | | E | (1) EWC | | | | * | | - | - | E | - | | | | 58 |
| 59 | | | 360 | R | (1) RR RCPT | | | | | * | 20 | 2 | E | (E) LOAD | | | | 60 |
| 61 | 1000 | | | E | (1) RR HANDDRYER | | | * | | | - | - | E | - | | | | 62 |
| 63 | | 1000 | | E | (1) RR HANDDRYER | | | | * | | 20 | 2 | E | (E) LOAD | | | | 64 |
| 65 | | | 360 | R | (1) STOR RCPT | | | | | * | - | - | E | - | | | | 66 |
| 67 | 750 | | | E | (1) EWC | | | * | | | 20 | 1 | E | (1) MICROWAVE | 1200 | | | 68 |
| 69 | | 540 | | R | (1) CNTR RCPT | | | | * | | 30 | 2 | E | (E) LOAD | | | | 70 |
| 71 | | | 500 | E | (1) SMARTBOARD | | | | | * | - | - | E | - | | | | 72 |
| 73 | 129 | | | M | (1) EF-2 | | | * | | | 20 | 1 | E | (E) LOAD | | | | 74 |
| 75 | | 1500 | | R | (1) SML APPLIANCE | | | | * | | 20 | 1 | E | (E) LOAD | | | | 76 |
| 77 | | | 180 | | (E) KITCH RCPT | | | | | * | 20 | 1 | E | (E) LOAD | | | | 78 |
| 79 | | | | E | (E) LOAD | 1 | 20 | * | | | 20 | 1 | E | (1) DISHWASHER | 1200 | | | 80 |
| 81 | | | | | (E) SPACE | | | | * | | 20 | 1 | M | (1) DISPOSAL | | 1200 | | 82 |
| 83 | | | | | (E) SPACE | | | | | * | 20 | 1 | E | (1) REFRIGERATOR | | | 1200 | 84 |

| LOAD TYPE | PANEL TOTAL | FEED THRU TOTAL | SUBFEED TOTAL | FEEDER SUBTOTAL | DEMAND | FEEDER TOTAL |
|---|---|---|---|---|---|---|
| (L) LIGHTING | 0 | | | 0 | 125% | 0 |
| (R) RECEPTACLES | 3300 | | | 3300 | NEC 220 | 3300 |
| (LM) LARGEST MOTOR | 0 | | | 0 | 25% | 0 |
| (M) MOTORS (ALL) | 1329 | | | 1329 | 100% | 1329 |
| (E) EQUIPMENT | 8100 | | | 8100 | 100% | 8100 |
| (A) APPLIANCES | 0 | | | 0 | 0 | 0 |

**PANEL TOTAL (KVA):** 12.7
**PANEL TOTAL (A):** 35

**GENERAL NOTES:**
A
B
C
D
E

**SPECIFIC NOTES:**
(1) NEW LOAD ON NEW BREAKER
(2)
(3)
(4)
(5)

## PANEL: (E) ENR

**LOCATION:** (E) MECH PENTHOUSE
**MOUNTING:** SURFACE

**VOLTAGE:** 120/208V, 3PH, 4W
**MINIMUM BUS:** 100
**MAIN:** 50/3 CB
**MINIMUM AIC:** EXISTING

| NO. | LOAD A | LOAD B | LOAD C | TYPE | LOAD DESCRIPTION | BREAKER POLE | BREAKER TRIP | BUS A | BUS B | BUS C | BREAKER TRIP | BREAKER POLE | TYPE | LOAD DESCRIPTION | LOAD A | LOAD B | LOAD C | NO. |
|---|---|---|---|---|---|---|---|---|---|---|---|---|---|---|---|---|---|---|
| 1 | | | | - | EXISTING LOAD | - | 20 | * | | | 20 | 1 | | EXISTING LOAD | | | | 2 |
| 3 | | | | | EXISTING LOAD | 1 | 20 | | * | | 20 | 1 | | EXISTING LOAD | | | | 4 |
| 5 | | | | | EXISTING LOAD | 1 | 20 | | | * | 20 | 1 | | EXISTING LOAD | | | | 6 |
| 7 | | | | | EXISTING LOAD | 1 | 20 | * | | | 20 | 1 | | EXISTING LOAD | | | | 8 |
| 9 | | | | | EXISTING LOAD | 1 | 20 | | * | | 20 | 1 | | EXISTING LOAD | | | | 10 |
| 11 | | | | | EXISTING LOAD | 1 | 20 | | | * | 20 | 1 | | EXISTING LOAD | | | | 12 |
| 13 | | | | M | (N) STOR B37 A/C EVAP | 2 | 20 | * | | | 20 | 1 | | EXISTING LOAD | | | | 14 |
| 15 | | | | M | -- | - | - | | * | | 20 | 2 | M | (N) IT ROOM A/C | | | | 16 |
| 17 | | | | M | (N) STOR B37 A/C CU | 2 | 25 | | | * | - | - | M | - | | | | 18 |
| 19 | | | | M | -- | - | - | * | | | | | | SPACE | | | | 20 |
| 21 | | | | R | (N) STOR B37 IT | 1 | 20 | | * | | - | | | SPACE | | | | 22 |
| 23 | | | | | SPACE | | | | | * | | | | SPACE | | | | 24 |
| 25 | | | | | EXISTING LOAD | 1 | 20 | * | | | 20 | 1 | | SPARE | | | | 26 |
| 27 | | | | | EXISTING LOAD | 1 | 20 | | * | | 20 | 1 | | SPARE | | | | 28 |
| 29 | | | | | EXISTING LOAD | 1 | 20 | | | * | 20 | 1 | | SPARE | | | | 30 |

| LOAD TYPE | PANEL TOTAL | FEED THRU TOTAL | SUBFEED TOTAL | FEEDER SUBTOTAL | DEMAND | FEEDER TOTAL |
|---|---|---|---|---|---|---|
| (L) LIGHTING | 0 | | | 0 | 125% | 0 |
| (R) RECEPTACLES | 0 | | | 0 | NEC 220 | 0 |
| (LM) LARGEST MOTOR | 0 | | | 0 | 25% | 0 |
| (M) MOTORS (ALL) | 0 | | | 0 | 100% | 0 |
| (E) EQUIPMENT | 0 | | | 0 | 100% | 0 |
| (A) APPLIANCES | 0 | | | 0 | 0 | 0 |

**PANEL TOTAL (KVA):** 0.0
**PANEL TOTAL (A):** 0

**GENERAL NOTES:**
A
B
C
D
E

**SPECIFIC NOTES:**
(1) NEW LOAD ON EXISTING BREAKER
(2)
(3)
(4)
(5)


TAB Associates
*The Architectural Balance*
0056 Edwards Village Blvd.
Suite 210
Edwards, CO 81632
(970) 766-1470
fax: (970) 766-1471
email: tab@vail.net
www.tabassociates.com


Seal

COLORADO LICENSED
MARC A. SACCONI
42215
PROFESSIONAL ENGINEER
4-6-20

# STRAWBERRY PARK ELEMENTARY
# 39620 AMETHYST DRIVE
Steamboat Springs, CO

**Revisions:**

| No | Description | Date |
|---|---|---|
| | | |

**Issue Dates:**
PERMIT SET
04.06.2020

**Sheet Title:**
ELECTRICAL SCHEDULES

**Project No:**
10182.00

**Sheet No:**
E0.2


BG BUILDINGWORKS
systems fulfilled
303.278.3820 www.bgbuildingworks.com
Project No. 10182.00

Copyright 2020

ALBUQUERQUE | AVON | DENVER | FORT COLLINS

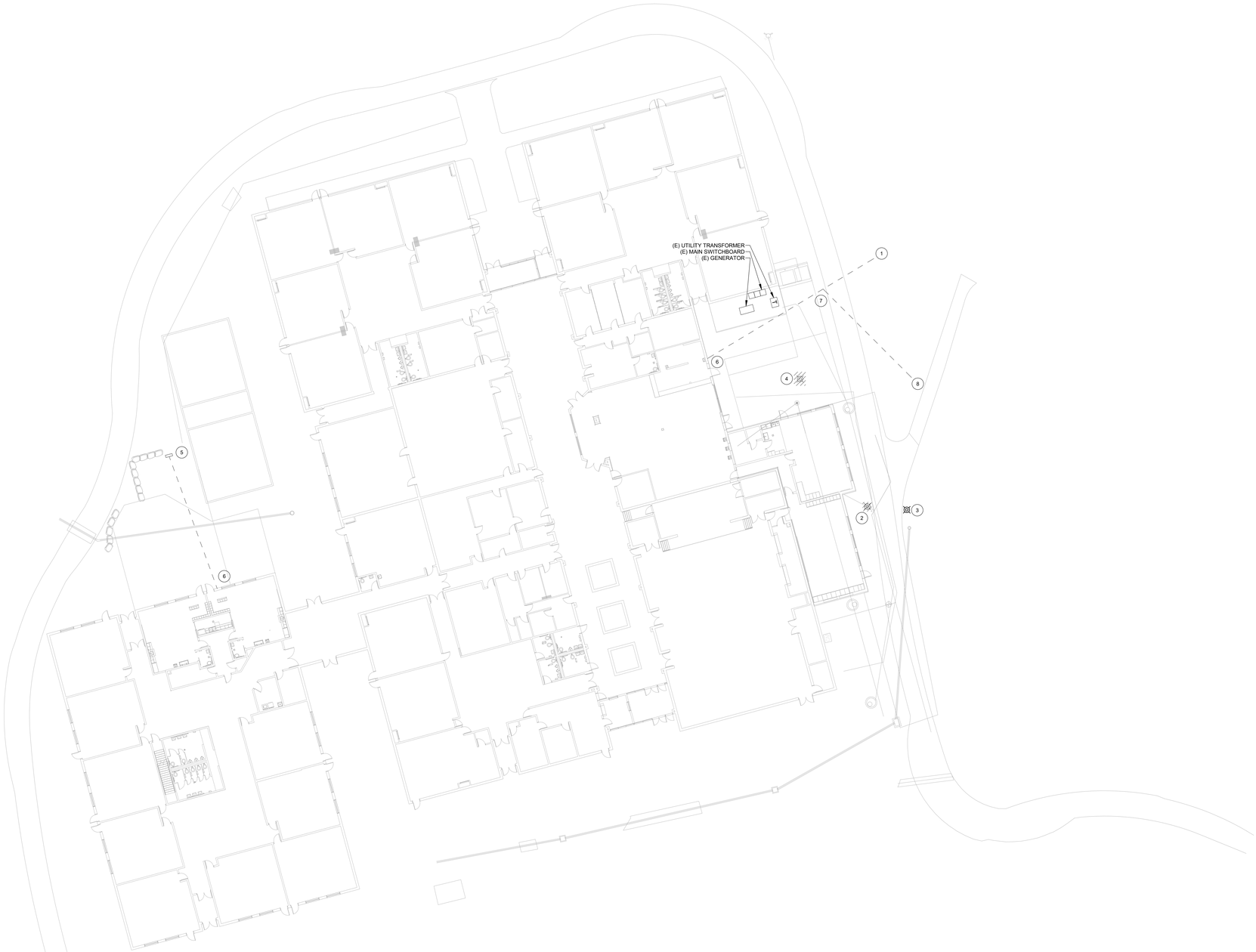


ELECTRICAL SITE PLAN

SCALE: 1" = 20'-0"

## NOTES:

1. REFER TO CIVIL PLANS FOR ADDITIONAL INFORMATION.

## # FLAG NOTES:

1 PROVIDE 4"C WITH INNER-DUCT AND PULL-STRING TO EXISTING BOILER. PROVIDE CONDUIT CAP AT CONDUIT TERMINATION. COORDINATE EXACT STUB-UP LOCATION WITH OWNER.

2 DISCONNECT EXISTING ELECTRICAL CONNECTIONS TO SITE LIGHT. SALVAGE AND PROTECT EXISTING LIGHT AND POLE FOR REUSE. DEMO EXISTING CONCRETE BASE. SPLICE AND EXTEND EXISTING ELECTRICAL FEED TO NEW LIGHT LOCATION INDICATED WITH FLAG NOTE #3 ON THIS SHEET.

3 RELOCATED SITE LIGHT. REFER TO FLAG NOTE #2 ON THIS SHEET FOR MORE INFORMATION. PROVIDE NEW CONCRETE BASE FOR RELOCATED POLE LIGHT.

4 DEMO EXISTING POLE LIGHT AND RETURN TO OWNER.

5 PROVIDE 4"C WITH INNER-DUCT TO EXISTING BOILER. TERMINATE CONDUIT TO SURFACE MOUNTED PULL BOX MOUNTED TO EXISTING FENCEPOST.

6 REFER TO DIAGRAM E ON SHEET E3.1 FOR CONDUIT ENTRY INTO BUILDING.

7 INGRADE SPLICE BOX. REFER TO CIVIL PLANS FOR SPLICE BOX SIZE.

8 PROVIDE 4"C WITH INNER-DUCT AND PULL-STRING TO NEW TRASH ENCLOSURE. PROVIDE CONDUIT CAP AT CONDUIT TERMINATION. COORDINATE EXACT STUB-UP LOCATION WITH OWNER.

TAB Associates
*The Architectural Balance*
0056 Edwards Village Blvd.
Suite 310
Edwards, CO 81632
(970) 766-1470
fax: (970) 766-1471
email: tab@vail.net
www.tabassociates.com

Seal

COLORADO LICENSED
MARC A. SACCONI
42215
PROFESSIONAL ENGINEER
4-6-20

# STRAWBERRY PARK ELEMENTARY
# 39620 AMETHYST DRIVE
## Steamboat Springs, CO

Revisions:

| No | Description | Date |
|---|---|---|
| | | |

Issue Dates:

PERMIT SET
04.06.2020

Sheet Title:

ELECTRICAL SITE PLAN

Project No:
10182.00

Sheet No:
E1.0

BG BUILDINGWORKS
systems fulfilled
303.278.3820 www.bgbuildingworks.com
Project No. 10182.00
Copyright 2020
ALBUQUERQUE | AVON | DENVER | FORT COLLINS

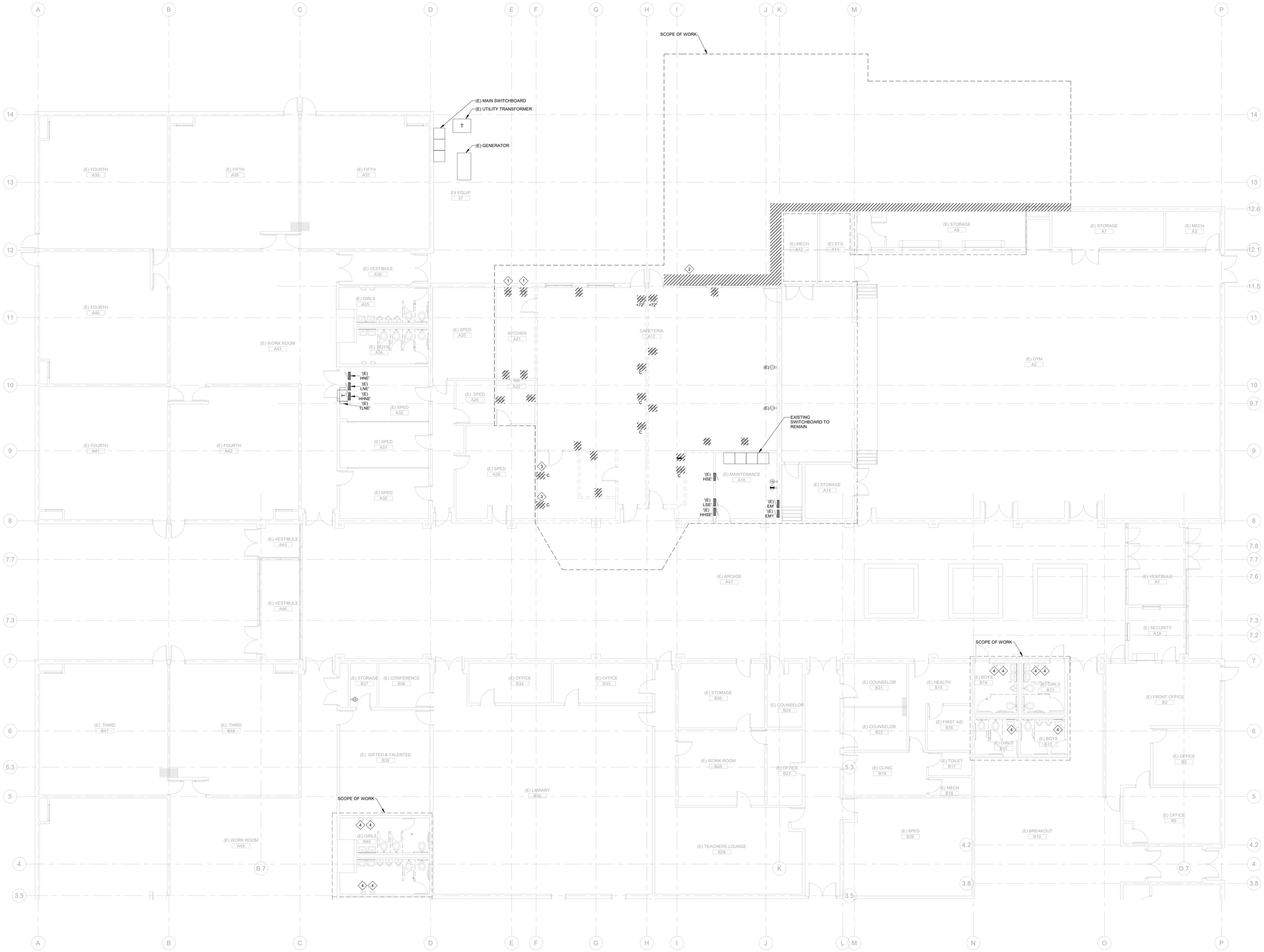


1 MAIN LEVEL AREA A DEMO ELECTRICAL PLAN
SCALE: 1/8" = 1'-0"

## NOTES:

1. DEMOLITION PLAN INDICATES A DESIRED SCOPE OF WORK; THE CONTRACTOR SHALL BE RESPONSIBLE TO VERIFY IN FIELD PRIOR TO START OF WORK.
2. CONDITIONS MAY EXIST WHERE (E) CABLING AND/OR EQUIPMENT IS INSTALLED WITHIN AN AREA OF DEMOLITION THAT IS INTENDED TO REMAIN IN ORDER TO KEEP SYSTEMS OUTSIDE OF THE AREA OF DEMOLITION IN OPERABLE CONDITION. CONTRACTOR SHALL PROVIDE APPROPRIATE PROTECTION AND EXERCISE CARE WHEN PERFROMING DEMOLITION AROUND SUCH CABLING AND EQUIPMENT.
3. ALL SYSTEMS LOCATED OUTSIDE THE AREA OF DEMOLITION ARE INTENDED TO REMAIN OPERABLE.
4. FOR ALL ITEMS TO BE DEMOLISHED REMOVE CIRCUIT BACK TO POINT OF CONNECTION. MAKE BRANCH CIRCUIT WITH REMAINING DEVICES CONTINUOUS.
5. ELECTRICAL CONTRACTOR SHALL REMOVE ALL DEMOLISHED ITEMS FROM SITE UNLESS OWNER WISHES TO RETAIN. ITEMS REMOVED FROM SITE SHALL BE DISPOSED OF IN A LEGAL MANNER.
6. EVERY ATTEMPT WAS MADE TO LOCATE ALL ITEMS TO BE INCLUDED IN THE DEMOLITION SCOPE IN THIS OCCUPIED SPACE. ELECTRICAL CONTRACTOR SHALL PROVIDE A REASONABLE ALLOWANCE TO INCLUDE THE REMOVAL OF ITEMS NOT INDICATED ON THE ELECTRICAL DEMOLITION PLAN.

## DEMO NOTES

1 DISCONNECT AND REMOVE EXISTING 6-50R RECEPTACLE.

2 DISCONNECT AND REMOVE EXISTING ELECTRICAL FIXTURES AND EQUIPMENT WITHIN HATCHED EXTERIOR WALLS.

3 DISCONNECT AND REMOVE EXISTING RECEPTACLE. PROTECT AND STORE DURING CONSTRUCTION. REINSTALL RECEPTACLE IN SAME LOCATION AT 18" AFF.

4 EC TO DISCONNECT EXISTING HAND DRYERS FOR REPLACEMENT.

TAB Associates
*The Architectural Balance*
0056 Edwards Village Blvd.
Suite 210
Edwards, CO 81632
(970) 766-1470
fax: (970) 766-1471
email: tab@vail.net
www.tabassociates.com

Seal

COLORADO LICENSED
MARC A. SACCONI
42215
PROFESSIONAL ENGINEER
4-6-20

# STRAWBERRY PARK ELEMENTARY
# 39620 AMETHYST DRIVE
## Steamboat Springs, CO

Revisions:

| No | Description | Date |
|---|---|---|
| | | |

Issue Dates:
PERMIT SET
04.06.2020

Sheet Title:
MAIN LEVEL AREA A DEMO ELECTRICAL PLAN

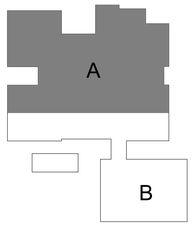


KEY PLAN

BG BUILDINGWORKS
systems fulfilled
303.278.3820 www.bgbuildingworks.com
Project No. 10182.00 Copyright 2020
ALBUQUERQUE | AVON | DENVER | FORT COLLINS

Project No:
10182.00

Sheet No:
ED2.1

## NOTES:

1. DEMOLITION PLAN INDICATES A DESIRED SCOPE OF WORK; THE CONTRACTOR SHALL BE RESPONSIBLE TO VERIFY IN FIELD PRIOR TO START OF WORK.
2. CONDITIONS MAY EXIST WHERE (E) CABLING AND/OR EQUIPMENT IS INSTALLED WITHIN AN AREA OF DEMOLITION THAT IS INTENDED TO REMAIN IN ORDER TO KEEP SYSTEMS OUTSIDE OF THE AREA OF DEMOLITION IN OPERABLE CONDITION. CONTRACTOR SHALL PROVIDE APPROPRIATE PROTECTION AND EXERCISE CARE WHEN PERFROMING DEMOLITION AROUND SUCH CABLING AND EQUIPMENT.
3. ALL SYSTEMS LOCATED OUTSIDE THE AREA OF DEMOLITION ARE INTENDED TO REMAIN OPERABLE.
4. FOR ALL ITEMS TO BE DEMOLISHED REMOVE CIRCUIT BACK TO POINT OF CONNECTION. MAKE BRANCH CIRCUIT WITH REMAINING DEVICES CONTINUOUS.
5. ELECTRICAL CONTRACTOR SHALL REMOVE ALL DEMOLISHED ITEMS FROM SITE UNLESS OWNER WISHES TO RETAIN. ITEMS REMOVED FROM SITE SHALL BE DISPOSED OF IN A LEGAL MANNER.
6. EVERY ATTEMPT WAS MADE TO LOCATE ALL ITEMS TO BE INCLUDED IN THE DEMOLITION SCOPE IN THIS OCCUPIED SPACE. ELECTRICAL CONTRACTOR SHALL PROVIDE A REASONABLE ALLOWANCE TO INCLUDE THE REMOVAL OF ITEMS NOT INDICATED ON THE ELECTRICAL DEMOLITION PLAN.

## DEMO NOTES

2 DISCONNECT AND REMOVE EXISTING SWITCH SERVING CLASSROOM SPEAKER.

3 DISCONNECT AND REMOVE EXISTING RECEPTACLE. TO BE REPLACED WITH NEW GFCI RECEPTACLE.

4 ALL RECEPTACLES BELOW 96" AFF SHALL BE REMOVED FOR REPLACEMENT TO TAMPER PROOF TYPE RECEPTACLES.

5 EC TO DISCONNECT EXISTING HAND DRYERS FOR REPLACEMENT.

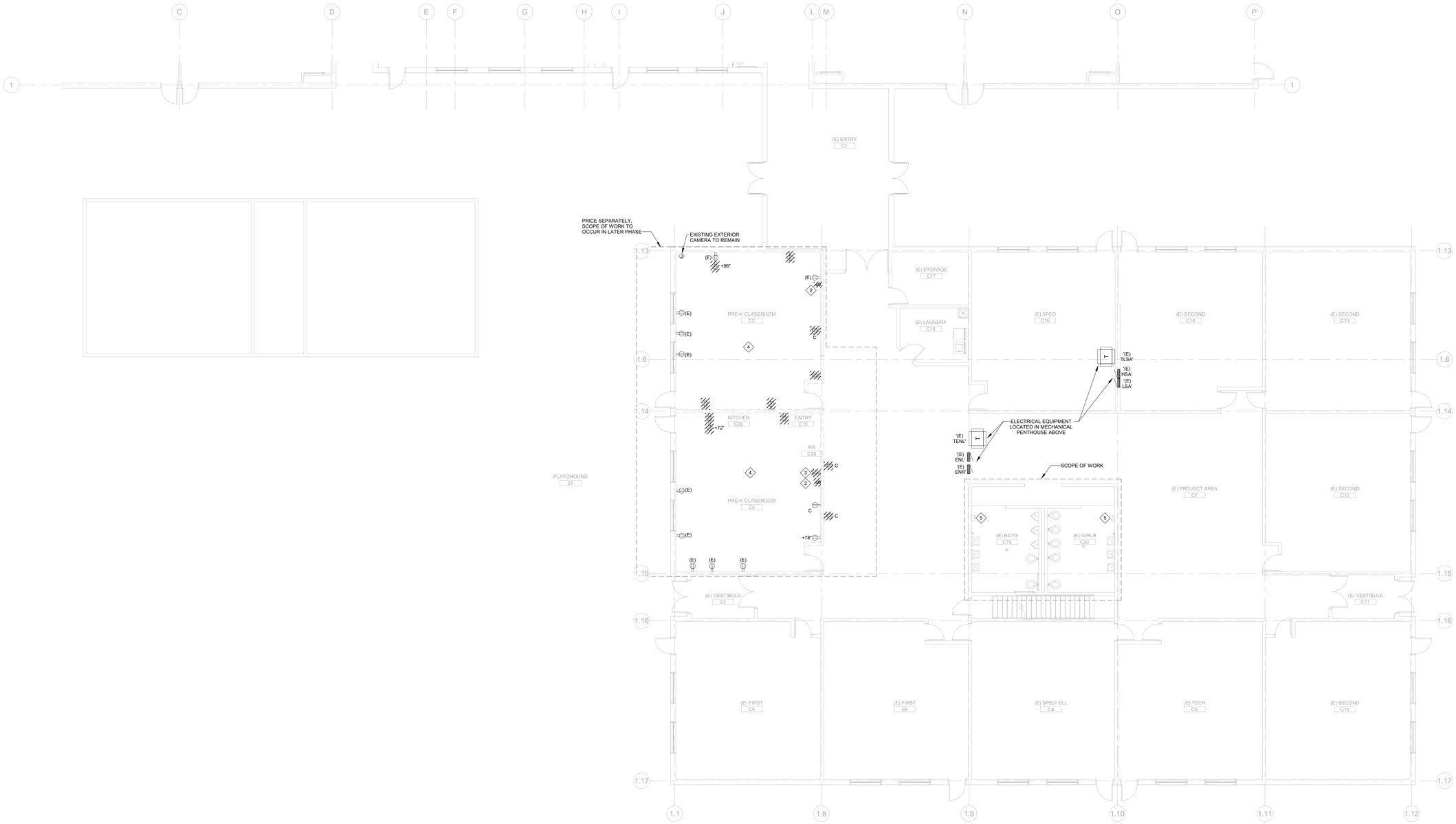


1 PRE-K PLAN AREA B DEMO ELECTRICAL PLAN
SCALE: 1/8" = 1'-0"

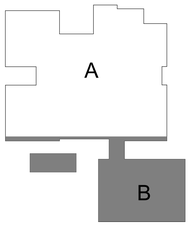


KEY PLAN


TAB Associates
*The Architectural Balance*
0056 Edwards Village Blvd.
Suite 210
Edwards, CO 81632
(970) 766-1470
fax: (970) 766-1471
email: tab@vail.net
www.tabassociates.com


Seal

COLORADO LICENSED
MARC A. SACCONI
42215
PROFESSIONAL ENGINEER
4-6-20

# STRAWBERRY PARK ELEMENTARY
# 39620 AMETHYST DRIVE
## Steamboat Springs, CO

Revisions:

| No | Description | Date |
|---|---|---|
| | | |

Issue Dates:
PERMIT SET
04.06.2020

Sheet Title:
PRE-K PLAN AREA B DEMO ELECTRICAL PLAN

Project No:
10182.00

Sheet No:
ED2.2


BG BUILDINGWORKS
systems fulfilled
303.278.3820 www.bgbuildingworks.com
Project No. 10182.00

Copyright 2020
ALBUQUERQUE | AVON | DENVER | FORT COLLINS

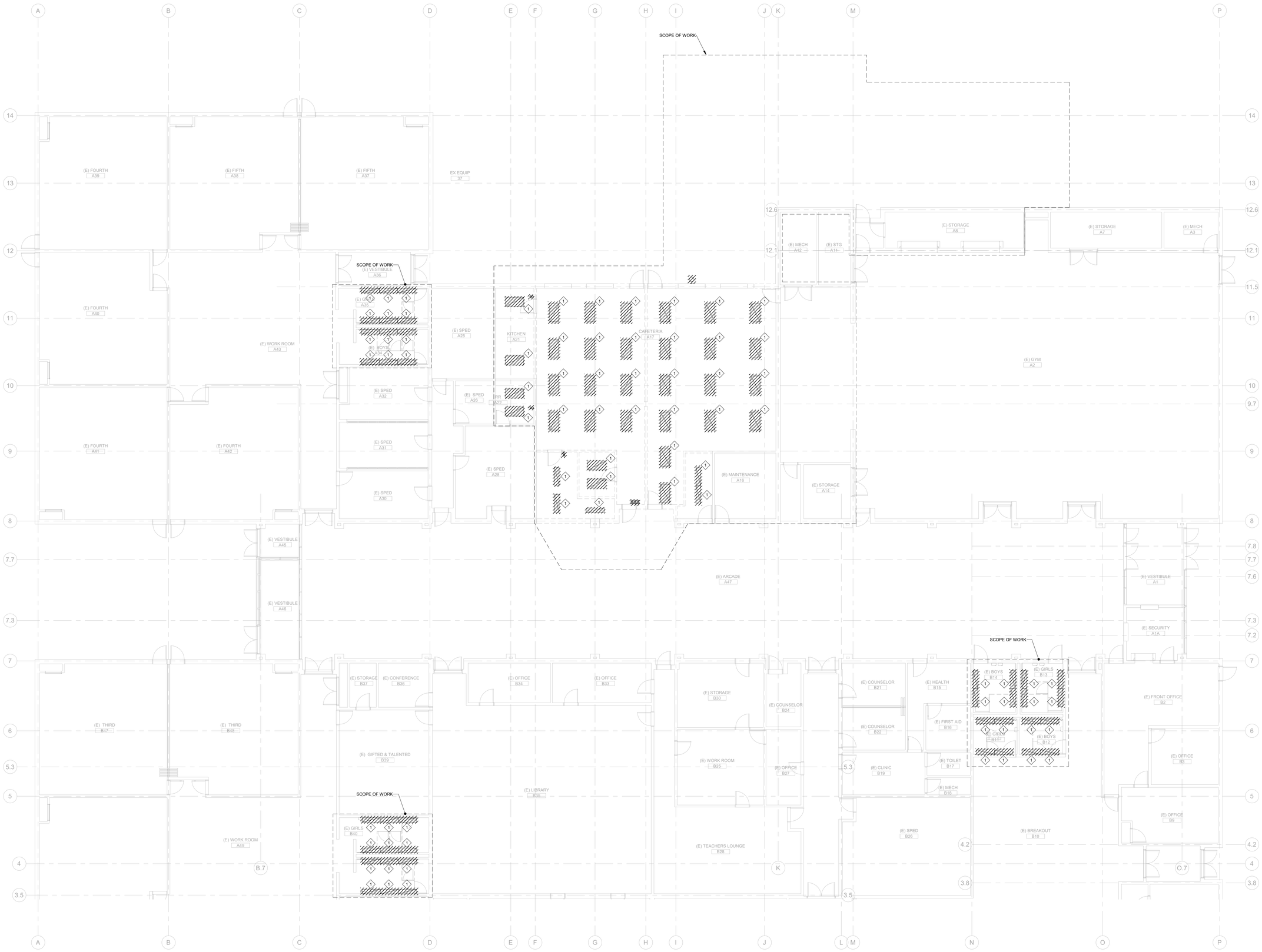


1 MAIN LEVEL AREA A DEMO LIGHTING RCP
SCALE: 1/8" = 1'-0"

## NOTES:

1. DEMOLITION PLAN INDICATES A DESIRED SCOPE OF WORK. THE CONTRACTOR SHALL BE RESPONSIBLE TO VERIFY IN FIELD PRIOR TO START OF WORK.
2. CONDITIONS MAY EXIST WHERE (E) CABLING AND/OR EQUIPMENT IS INSTALLED WITHIN AN AREA OF DEMOLITION THAT IS INTENDED TO REMAIN IN ORDER TO KEEP SYSTEMS OUTSIDE OF THE AREA OF DEMOLITION IN OPERABLE CONDITION. CONTRACTOR SHALL PROVIDE APPROPRIATE PROTECTION AND EXERCISE CARE WHEN PERFROMING DEMOLITION AROUND SUCH CABLING AND EQUIPMENT.
3. ALL SYSTEMS LOCATED OUTSIDE THE AREA OF DEMOLITION ARE INTENDED TO REMAIN OPERABLE.
4. FOR ALL ITEMS TO BE DEMOLISHED REMOVE CIRCUIT BACK TO POINT OF CONNECTION. MAKE BRANCH CIRCUIT WITH REMAINING DEVICES CONTINUOUS.
5. ELECTRICAL CONTRACTOR SHALL REMOVE ALL DEMOLISHED ITEMS FROM SITE UNLESS OWNER WISHES TO RETAIN. ITEMS REMOVED FROM SITE SHALL BE DISPOSED OF IN A LEGAL MANNER.
6. EVERY ATTEMPT WAS MADE TO LOCATE ALL ITEMS TO BE INCLUDED IN THE DEMOLITION SCOPE IN THIS OCCUPIED SPACE. ELECTRICAL CONTRACTOR SHALL PROVIDE A REASONABLE ALLOWANCE TO INCLUDE THE REMOVAL OF ITEMS NOT INDICATED ON THE ELECTRICAL DEMOLITION PLAN.

## DEMO NOTES

1 REUSE EXISTING LIGHTING CIRCUIT TO POWER NEW LED LIGHTING.

TAB Associates
*The Architectural Balance*
0056 Edwards Village Blvd.
Suite 210
Edwards, CO 81632
(970) 766-1470
fax: (970) 766-1471
email: tab@vail.net
www.tabassociates.com

Seal

# STRAWBERRY PARK ELEMENTARY
# 39620 AMETHYST DRIVE
Steamboat Springs, CO

| Revisions: | | |
|---|---|---|
| No | Description | Date |
| | | |

Issue Dates:
PERMIT SET
04.06.2020

Sheet Title:
MAIN LEVEL AREA A DEMO LIGHTING PLAN

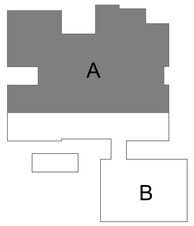


KEY PLAN

Project No:
10182.00

Sheet No:
ED2.11

BG BUILDINGWORKS
systems fulfilled
303.278.3820 www.bgbuildingworks.com
Project No. 10182.00 Copyright 2020
ALBUQUERQUE | AVON | DENVER | FORT COLLINS

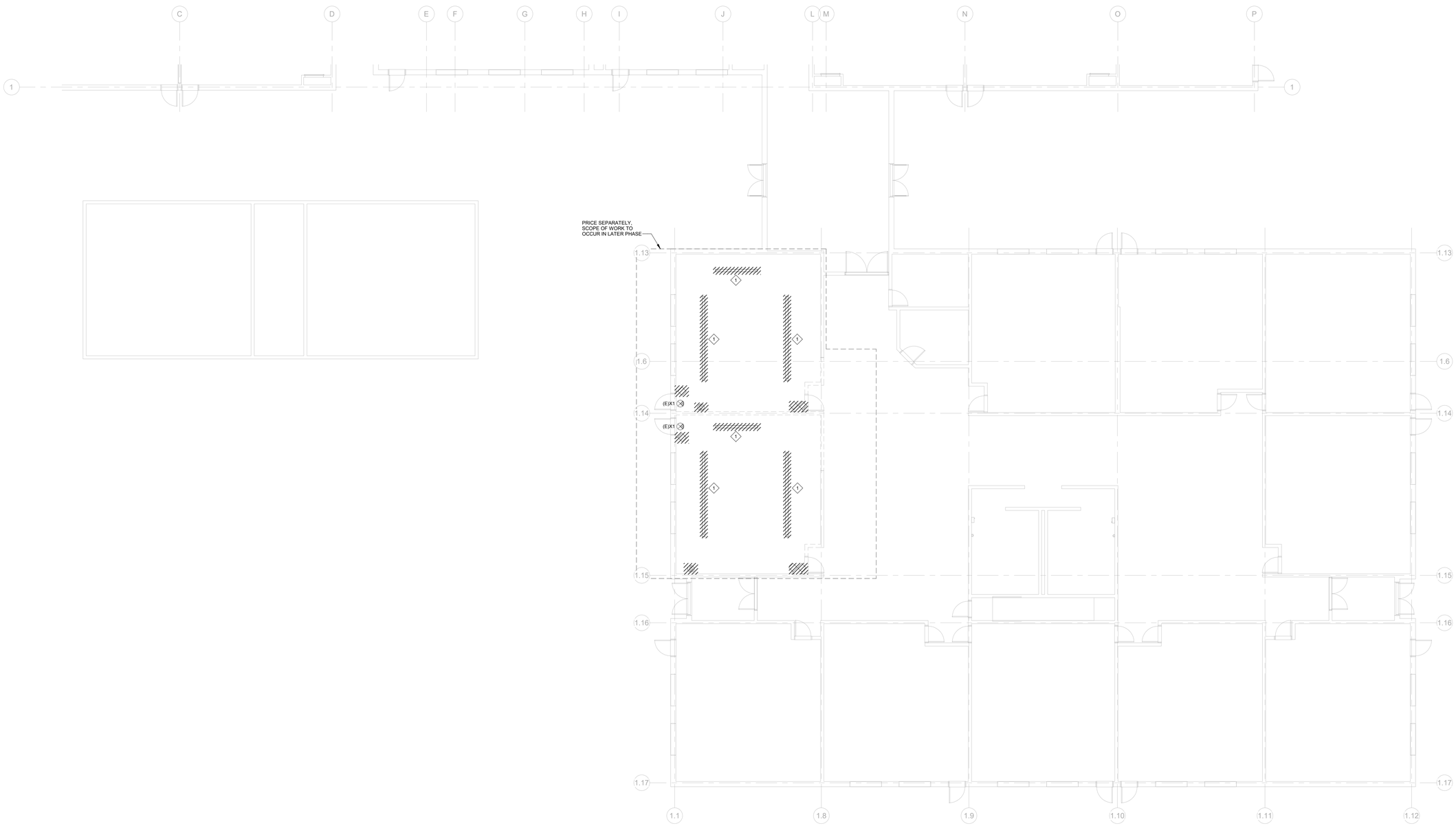


1 PRE-K PLAN AREA B DEMO LIGHTING RCP
SCALE: 1/8" = 1'-0"

## NOTES:

1. DEMOLITION PLAN INDICATES A DESIRED SCOPE OF WORK; THE CONTRACTOR SHALL BE RESPONSIBLE TO VERIFY IN FIELD PRIOR TO START OF WORK.
2. CONDITIONS MAY EXIST WHERE (E) CABLING AND/OR EQUIPMENT IS INSTALLED WITHIN AN AREA OF DEMOLITION THAT IS INTENDED TO REMAIN IN ORDER TO KEEP SYSTEMS OUTSIDE OF THE AREA OF DEMOLITION IN OPERABLE CONDITION. CONTRACTOR SHALL PROVIDE APPROPRIATE PROTECTION AND EXERCISE CARE WHEN PERFROMING DEMOLITION AROUND SUCH CABLING AND EQUIPMENT.
3. ALL SYSTEMS LOCATED OUTSIDE THE AREA OF DEMOLITION ARE INTENDED TO REMAIN OPERABLE.
4. FOR ALL ITEMS TO BE DEMOLISHED REMOVE CIRCUIT BACK TO POINT OF CONNECTION. MAKE BRANCH CIRCUIT WITH REMAINING DEVICES CONTINUOUS.
5. ELECTRICAL CONTRACTOR SHALL REMOVE ALL DEMOLISHED ITEMS FROM SITE UNLESS OWNER WISHES TO RETAIN. ITEMS REMOVED FROM SITE SHALL BE DISPOSED OF IN A LEGAL MANNER.
6. EVERY ATTEMPT WAS MADE TO LOCATE ALL ITEMS TO BE INCLUDED IN THE DEMOLITION SCOPE IN THIS OCCUPIED SPACE. ELECTRICAL CONTRACTOR SHALL PROVIDE A REASONABLE ALLOWANCE TO INCLUDE THE REMOVAL OF ITEMS NOT INDICATED ON THE ELECTRICAL DEMOLITION PLAN.

## DEMO NOTES

1 REUSE EXISTING LIGHTING CIRCUIT TO POWER NEW LED LIGHTING.


TAB Associates
*The Architectural Balance*
0056 Edwards Village Blvd.
Suite 210
Edwards, CO 81632
(970) 766-1470
fax: (970) 766-1471
email: tab@vail.net
www.tabassociates.com


Seal

COLORADO LICENSED
MARC A. SACCONI
42215
PROFESSIONAL ENGINEER
4-6-20

# STRAWBERRY PARK ELEMENTARY
# 39620 AMETHYST DRIVE
## Steamboat Springs, CO

Revisions:

| No | Description | Date |
|---|---|---|
| | | |

Issue Dates:
PERMIT SET
04.06.2020

Sheet Title:
PRE-K PLAN AREA B DEMO LIGHTING PLAN

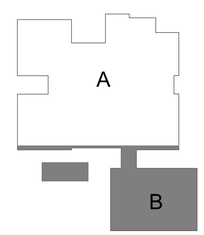


KEY PLAN

Project No:
10182.00

Sheet No:
ED2.12


BG BUILDINGWORKS
systems fulfilled
303.278.3820 www.bgbuildingworks.com
Project No. 10182.00 Copyright 2020
ALBUQUERQUE | AVON | DENVER | FORT COLLINS

1 MAIN LEVEL AREA A ELECTRICAL PLAN
SCALE: 1/8" = 1'-0"

## NOTES:

1. REFER TO ARCHITECTURAL PLANS AND INTERIOR ELEVATIONS FOR FINAL RECEPTACLE AND DEVICE PLACEMENT. COORDINATE ALL RECEPTACLE MOUNTING LOCATIONS WITH FIXTURES, APPLIANCES, FURNITURE, CABINETRY, AND OTHER EQUIPMENT PRIOR TO ROUGH-IN.
2. REFER TO MECHANICAL EQUIPMENT SCHEDULE FOR CIRCUIT, DISCONNECT, AND CONDUCTORS FOR MECHANICAL EQUIPMENT.
3. ELECTRICAL CONTRACTOR IS RESPONSIBLE FOR FIELD COORDINATING THE LOCATION OF ELECTRICAL EQUIPMENT, JUNCTION BOXES, DISCONNECTS, ETC. EC SHALL BE RESPONSIBLE FOR COORDINATION AND THE ROUTING OF FEEDERS, AND BRANCH CIRCUITS.
4. COORDINATE POWER CONNECTIONS FOR OWNER PROVIDED EQUIPMENT AND APPLIANCES, AND ALL OTHER EQUIPMENT PROVIDED BY OTHER DIVISIONS WITH SUBMITTAL DATA CUT SHEETS, WIRING DIAGRAMS, AND MANUFACTURER'S WRITTEN INSTALLATION INSTRUCTIONS. FIELD COORDINATE FINAL LOCATIONS OF EQUIPMENT AND POWER CONNECTIONS WITH GENERAL CONTRACTOR AND OTHER DIVISIONS/CONTRACTORS PRIOR TO ROUGH-IN.

## # FLAG NOTES:

1 PROVIDE FLOOR BOX WITH (1) 3/4" CONDUIT FOR 120V POWER FROM NEAREST FULL HEIGHT WALL. COORDINATE EXACT LOCATION WITH ARCHITECT PRIOR TO ROUGH-IN.

2 CEILING MOUNTED RECEPTACLE FOR CORD AND PLUG EXHAUST FAN.

3 PROVIDE CEILING MOUNTED RECEPTACLE FOR PROJECTOR. COORDINATE EXACT LOCATION WITH ARCHITECT AND OWNER PRIOR TO ROUGH-IN.

4 PROVIDE ABOVE CEILING WALL MOUNT RECEPTACLE FOR CLASSROOM TV. COORDINATE LOCATION WITH TECHNOLOGY DRAWINGS.

5 PROVIDE DEDICATED 20A 120V CIRCUIT FOR AV EQUIPMENT. COORDINATE RECEPTACLE ELEVATION WITH TECHNOLOGY DRAWINGS.

6 PROVIDE NEMA 6-50R RECEPTACLE FOR KILN. COORDINATE EXACT LOCATION WITH ARCHITECT.

7 REUSE EXISTING POWER CIRCUIT TO POWER RELOCATED RECEPTACLE.

8 REINSTALL EXISTING RECEPTACLE AT 18" AFF. MOVE FROM ABOVE COUNTER INSTALLATION.

9 200A, 3P, NF DISCONNECT ON PRIMARY SIDE OF TRANSFORMER 'TMN'.

10 DISCONNECT EXISTING CRAC-EVAP UNIT AND RECEPTACLES LOCATED IN THIS ROOM AND CIRCUIT UNIT TO PANEL 'ENR'. PROVIDE NEW 25A/P CIRCUIT BREAKER IN PANEL 'ENR' FOR EXISTING CONDENSING UNIT, 20A/2P CIRCUIT BREAKER FOR EVAPORATOR UNIT, AND A 20A/1P CIRCUIT BREAKER FOR EXISTING RECEPTACLES.

11 PROVIDE (2#12, 1#12G) 3/4"C TO CEILING MOUNTED JUNCTION BOX FOR MOTORIZED PROJECTOR SCREEN. COORDINATE EXACT LOCATION WITH ARCHITECT AND OWNER PRIOR TO ROUGH-IN.

12 REPLACE EXISTING HAND DRYERS. REFER TO ARCHITECTURAL PLANS FOR FURTHER INFORMATION.

13 PROVIDE POWER CONNECTION FOR DOUBLE DOOR ACCESS CONTROL. REFER TO TECHNOLOGY SHEETS FOR EXACT LOCATION.

14 CIRCUIT QUAD RECEPTACLE TO ENR-13. PROVIDE NEW 20A/1P BREAKER.

15 CIRCUIT QUAD RECEPTACLE TO ENR-15. PROVIDE NEW 20A/1P BREAKER.

TAB Associates
*The Architectural Balance*
0056 Edwards Village Blvd.
Suite 210
Edwards, CO 81632
(970) 766-1470
fax: (970) 766-1471
email: tab@vail.net
www.tabassociates.com

Seal
COLORADO LICENSED
MISC A. SACCONI
42215
PROFESSIONAL ENGINEER
4-6-20

# STRAWBERRY PARK ELEMENTARY
# 39620 AMETHYST DRIVE
## Steamboat Springs, CO

| Revisions: | | |
|---|---|---|
| No | Description | Date |
| | | |

Issue Dates:
PERMIT SET
04.06.2020

Sheet Title:
MAIN LEVEL AREA A ELEC PLAN

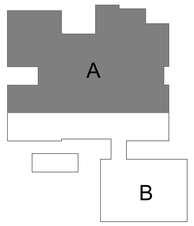


KEY PLAN

Project No:
10182.00

Sheet No:
E2.1

BG BUILDINGWORKS
systems fulfilled
303.278.3820 www.bgbuildingworks.com
Project No. 10182.00
Copyright 2020
ALBUQUERQUE | AVON | DENVER | FORT COLLINS

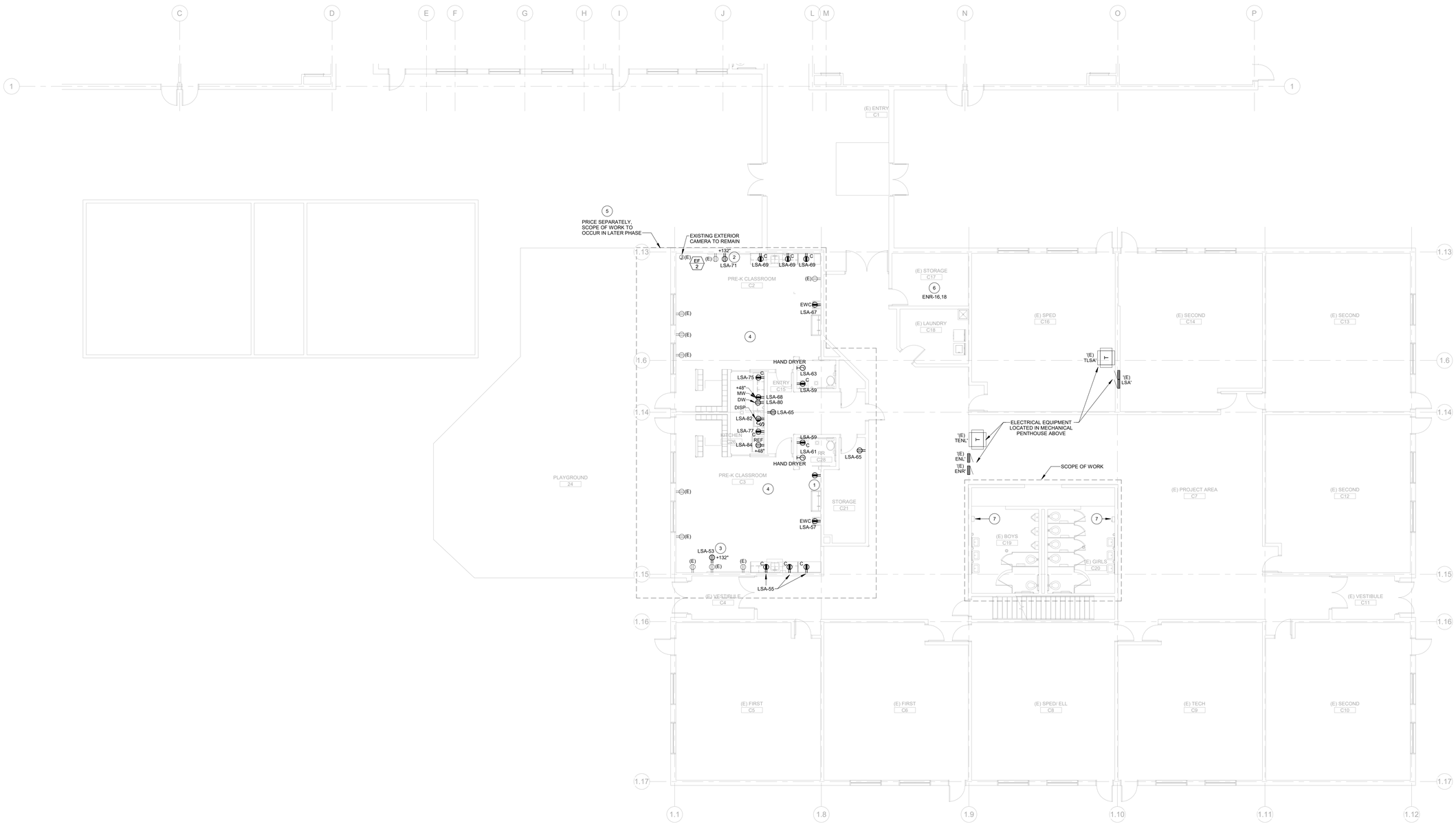


1 PRE-K PLAN AREA B ELECTRICAL PLAN
SCALE: 1/8" = 1'-0"

## NOTES:

1. REFER TO ARCHITECTURAL PLANS AND INTERIOR ELEVATIONS FOR FINAL RECEPTACLE AND DEVICE PLACEMENT. COORDINATE ALL RECEPTACLE MOUNTING LOCATIONS WITH FIXTURES, APPLIANCES, FURNITURE, CABINETRY, AND OTHER EQUIPMENT PRIOR TO ROUGH-IN.
2. REFER TO MECHANICAL EQUIPMENT SCHEDULE FOR CIRCUIT, DISCONNECT, AND CONDUCTORS FOR MECHANICAL EQUIPMENT.
3. ELECTRICAL CONTRACTOR IS RESPONSIBLE FOR FIELD COORDINATING THE LOCATION OF ELECTRICAL EQUIPMENT, JUNCTION BOXES, DISCONNECTS, ETC. EC SHALL BE RESPONSIBLE FOR COORDINATION AND THE ROUTING OF FEEDERS, AND BRANCH CIRCUITS.
4. COORDINATE POWER CONNECTIONS FOR OWNER PROVIDED EQUIPMENT AND APPLIANCES, AND ALL OTHER EQUIPMENT PROVIDED BY OTHER DIVISIONS WITH SUBMITTAL DATA CUT SHEETS, WIRING DIAGRAMS, AND MANUFACTURER'S WRITTEN INSTALLATION INSTRUCTIONS. FIELD COORDINATE FINAL LOCATIONS OF EQUIPMENT AND POWER CONNECTIONS WITH GENERAL CONTRACTOR AND OTHER DIVISIONS/CONTRACTORS PRIOR TO ROUGH-IN.

## # FLAG NOTES:

1 REPLACE EXISTING RECEPTACLE WITH NEW GFCI RECEPTACLE. USE EXISTING POWER CIRCUIT.

2 PROVIDE ABOVE CEILING RECEPTACLE FOR AV ENCLOSURE. COORDINATE LOCATION WITH TECHNOLOGY DRAWINGS.

3 PROVIDE ABOVE CEILING WALL MOUNT RECEPTACLE FOR CLASSROOM TV. COORDINATE LOCATION WITH TECHNOLOGY DRAWINGS.

4 ALL RECEPTACLES BELOW 96" AFF SHALL BE TAMPER PROOF TYPE. REPLACE EXISTING RECEPTACLES WITH TAMPER PROOF TYPE RECEPTACLES.

5 ALL NEW CIRCUITS IN THIS AREA SHALL BE CIRCUITED TO PANEL 'LSA'. PENDING 30 DAY METERING.

6 DISCONNECT EXISTING CRAC-EVAP UNIT LOCATED IN THIS ROOM AND CIRCUIT UNIT TO PANEL 'ENR'. PROVIDE NEW 20A2P CIRCUIT BREAKER IN PANEL 'ENR' FOR EXISTING COOLING UNIT.

7 REPLACE EXISITNG HAND DRYERS. REFER TO ARCHITECTURAL PLANS FOR FURTHER INFORMATION.

TAB Associates
*The Architectural Balance*
0056 Edwards Village Blvd.
Suite 210
Edwards, CO 81632
(970) 766-1470
fax: (970) 766-1471
email: tab@vail.net
www.tabassociates.com

Seal
COLORADO LICENSED
MARC A. SACCONI
42215
PROFESSIONAL ENGINEER
4-6-20

# STRAWBERRY PARK ELEMENTARY
# 39620 AMETHYST DRIVE
Steamboat Springs, CO

Revisions:

| No | Description | Date |
|---|---|---|
| | | |

Issue Dates:
PERMIT SET
04.06.2020

Sheet Title:
PRE-K PLAN AREA B ELECTRICAL PLAN

Project No:
10182.00

Sheet No:
E2.2

BG BUILDINGWORKS
systems fulfilled
303.278.3820 www.bgbuildingworks.com
Project No. 10182.00
Copyright 2020
ALBUQUERQUE | AVON | DENVER | FORT COLLINS

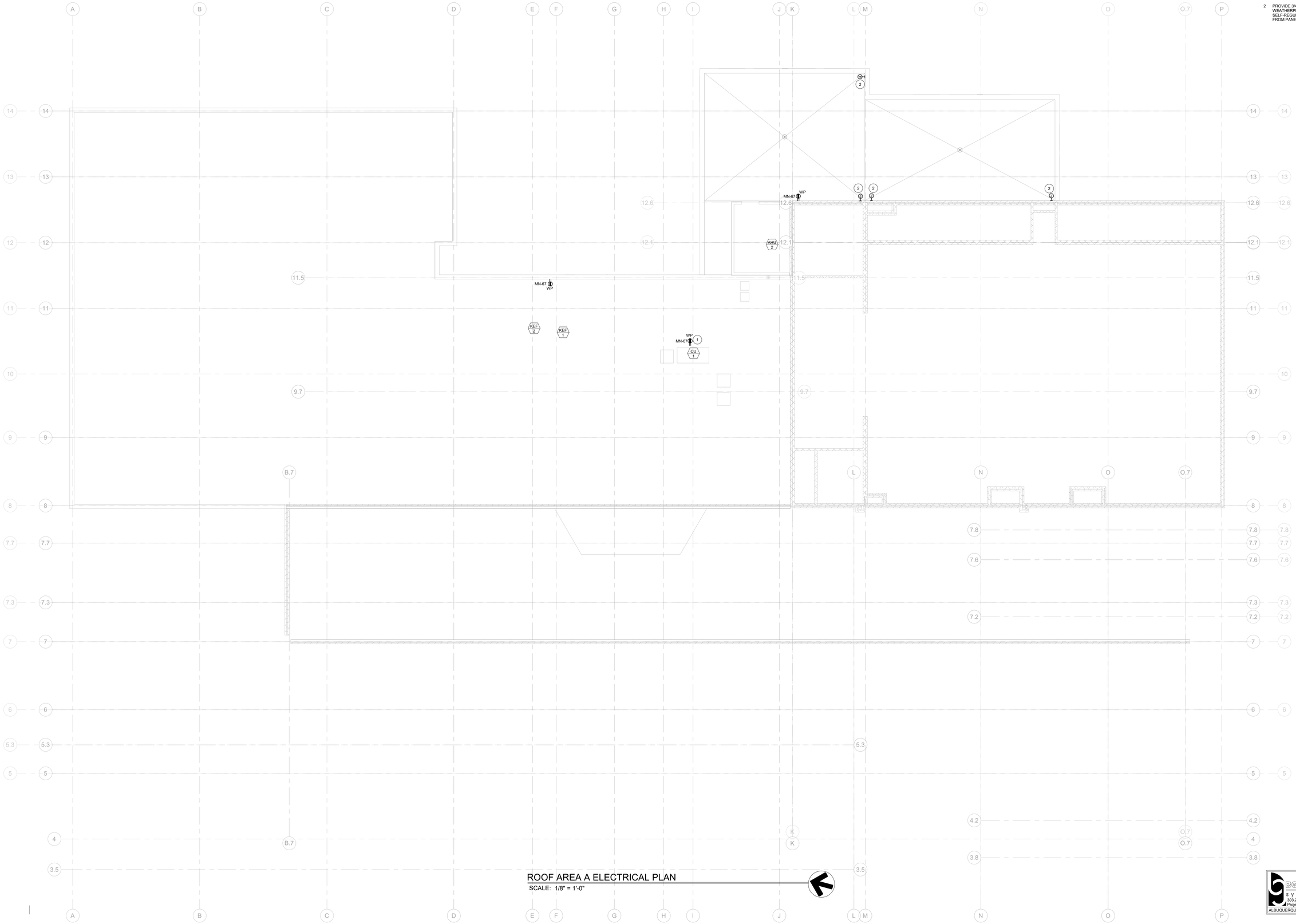


ROOF AREA A ELECTRICAL PLAN

SCALE: 1/8" = 1'-0"

## NOTES:

1. REFER TO MECHANICAL EQUIPMENT SCHEDULE FOR CIRCUIT, DISCONNECT, AND CONDUCTORS FOR MECHANICAL EQUIPMENT.
2. ELECTRICAL CONTRACTOR IS RESPONSIBLE FOR FIELD COORDINATING THE LOCATION OF ELECTRICAL EQUIPMENT, JUNCTION BOXES, DISCONNECTS, ETC. EC SHALL BE RESPONSIBLE FOR COORDINATION AND THE ROUTING OF FEEDERS, AND BRANCH CIRCUITS.

## # FLAG NOTES:

1 MOUNT RECEPTACLE TO SIDE OF CU-1.

2 PROVIDE 3/4"C WITH PULL-STRING TO WEATHERPROOF JUNCTION BOX FOR FUTURE SELF-REGULATING HEATING CABLE ROUTED FROM PANEL 'MN'.

TAB Associates
*The Architectural Balance*
0056 Edwards Village Blvd.
Suite 210
Edwards, CO 81632
(970) 766-1470
fax: (970) 766-1471
email: tab@vail.net
www.tabassociates.com

Seal

COLORADO LICENSED
MARC A. SACCONI
42215
PROFESSIONAL ENGINEER
4-6-20

# STRAWBERRY PARK ELEMENTARY
# 39620 AMETHYST DRIVE
## Steamboat Springs, CO

Revisions:

| No | Description | Date |
|---|---|---|
| | | |

Issue Dates:

PERMIT SET
04.06.2020

Sheet Title:

ELECTRICAL ROOF PLAN

Project No:
10182.00

Sheet No:
E2.3

BG BUILDINGWORKS
systems fulfilled
303.278.3820 www.bgbuildingworks.com
Project No. 10182.00 Copyright 2020
ALBUQUERQUE | AVON | DENVER | FORT COLLINS

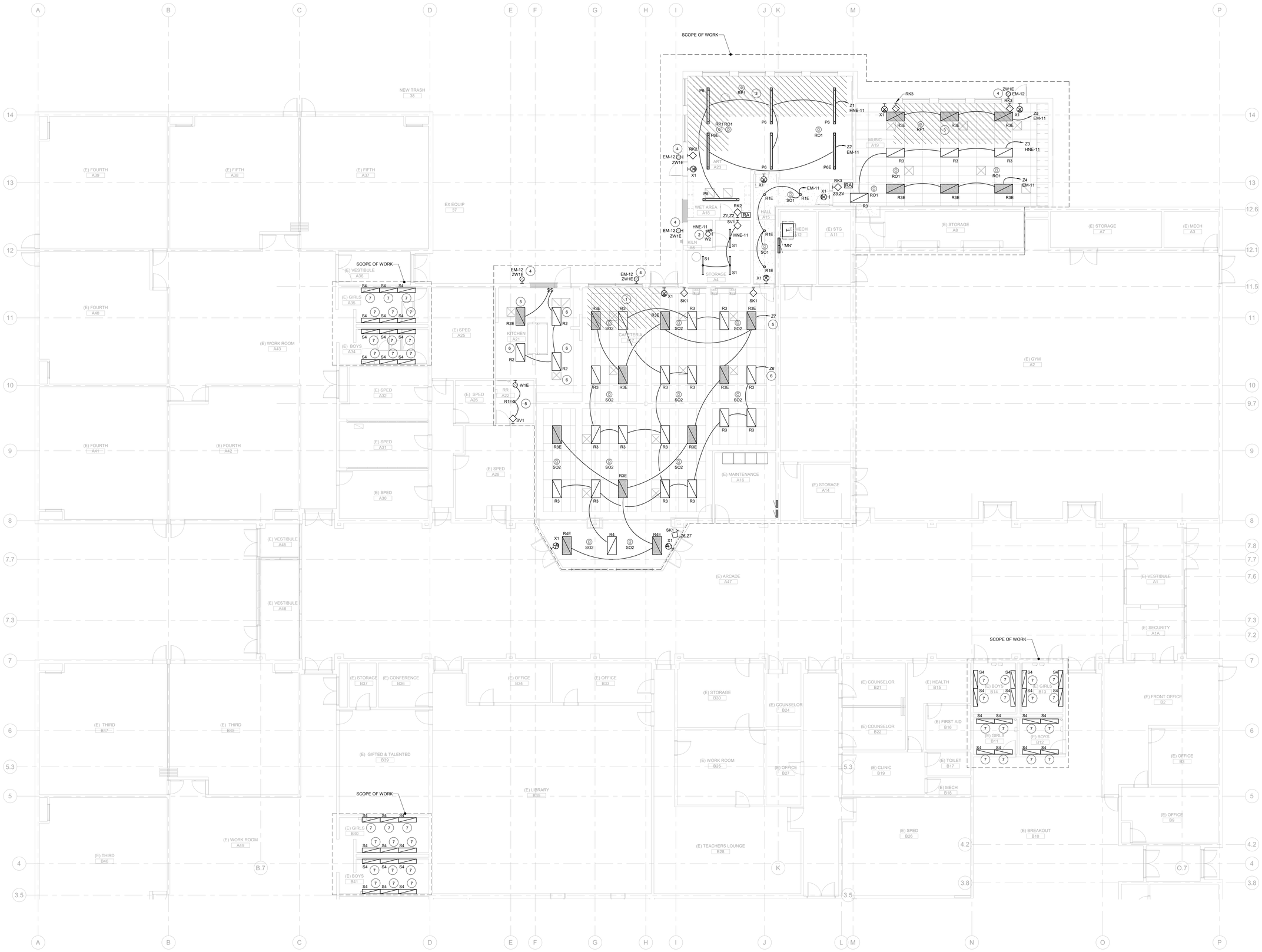


1 MAIN LEVEL AREA A LIGHTING RCP
SCALE: 1/8" = 1'-0"

## NOTES:

1. EXIT SIGNS SHALL BE CIRCUITED TO THE EMERGENCY BRANCH CIRCUIT SERVING THE EMERGENCY LIGHTING IN THE SAME SPACE.
2. SPACES WITH NORMAL AND EMERGENCY LIGHTING SHALL HAVE AN AUTOMATIC LOAD CONTROL RELAY. EMERGENCY LIGHTING IS TO BE CONTROLLED WITH THE NORMAL LIGHTING UNDER NORMAL POWER CONDITIONS. EMERGENCY LIGHTING TO AUTOMATICALLY RETURN TO FULL-BRIGHT IN THE EVENT OF EMERGENCY POWER OPERATION.

## # FLAG NOTES:

1. TOTAL GENERAL LIGHTING WATTAGE WITHING THE SIDELIGHT DAYLIGHT ZONE SUMS TO LESS THAN 150W. NO DAYLIGHT-RESPONSIVE CONTROLS TO BE INSTALLED IN COMPLIANCE WITH IECC 2015 C405.2.3.
2. COORDINATE EXACT LOCATION OF LIGHTING AND CONTROLS WITH ARCHITECT PRIOR TO ROUGH IN AND INSTALLATION
3. DAYLIGHT ZONE. FIXTURES SHALL AUTOMATICALLY DIM PER IECC 2015. SEE CONTROL SCHEDULE FOR ADDITIONAL INFORMATION
4. ON/OFF CONTROL TO BE PROVIDED VIA WEATHERPROOF PHOTOCELL. EC TO PROVIDE PHOTOCELL AND CONTACTOR. PHOTOCELL TO BE MOUNTED FACING NORTH; LOCATION TO BE APPROVED BY ARCHITECT PRIOR TO INSTALLATION. MOUNT FIXTURE 9'-0" ABOVE FINISH GRADE.
5. REUSE EXISTING EMERGENCY LIGHTING CIRCUIT TO POWER NEW LED LIGHTING.
6. REUSE EXISTING LIGHTING CIRCUIT TO POWER NEW LED LIGHTING.
7. REUSE EXISTING LIGHTING CIRCUIT TO POWER NEW LED LIGHTING. CONNECT FIXTURE TO EXISTING LIGHTING CONTROLS.


TAB Associates
*The Architectural Balance*
0056 Edwards Village Blvd.
Suite 210
Edwards, CO 81632
(970) 766-1470
fax: (970) 766-1471
email: tab@vail.net
www.tabassociates.com


Seal

# STRAWBERRY PARK ELEMENTARY
## 39620 AMETHYST DRIVE
### Steamboat Springs, CO

Revisions:

| No | Description | Date |
|---|---|---|
| | | |

Issue Dates:
PERMIT SET
04.06.2020

Sheet Title:
MAIN LEVEL AREA A LIGHTING PLAN

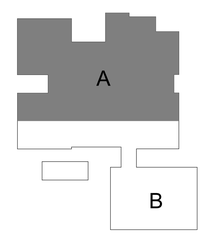


KEY PLAN


BG BUILDINGWORKS
systems fulfilled
303.278.3820 www.bgbuildingworks.com
Project No. 10182.00 Copyright 2020
ALBUQUERQUE | AVON | DENVER | FORT COLLINS


Project No:
10182.00

Sheet No:
E2.11

## NOTES:

1. EXIT SIGNS SHALL BE CIRCUITED TO THE EMERGENCY BRANCH CIRCUIT SERVING THE EMERGENCY LIGHTING IN THE SAME SPACE.
2. SPACES WITH NORMAL AND EMERGENCY LIGHTING SHALL HAVE AN AUTOMATIC LOAD CONTROL RELAY. EMERGENCY LIGHTING IS TO BE CONTROLLED WITH THE NORMAL LIGHTING UNDER NORMAL POWER CONDITIONS. EMERGENCY LIGHTING TO AUTOMATICALLY RETURN TO FULL-BRIGHT IN THE EVENT OF EMERGENCY POWER OPERATION.

## # FLAG NOTES:

1 DAYLIGHT ZONE. FIXTURES SHALL AUTOMATICALLY DIM PER IECC 2015. SEE CONTROL SCHEDULE FOR ADDITIONAL INFROMATION

2 REUSE EXISTING LIGHTING CIRCUIT TO POWER NEW LED LIGHTING.

3 REUSE EXISTING EMERGENCY LIGHTING CIRCUIT TO POWER NEW LED LIGHTING.

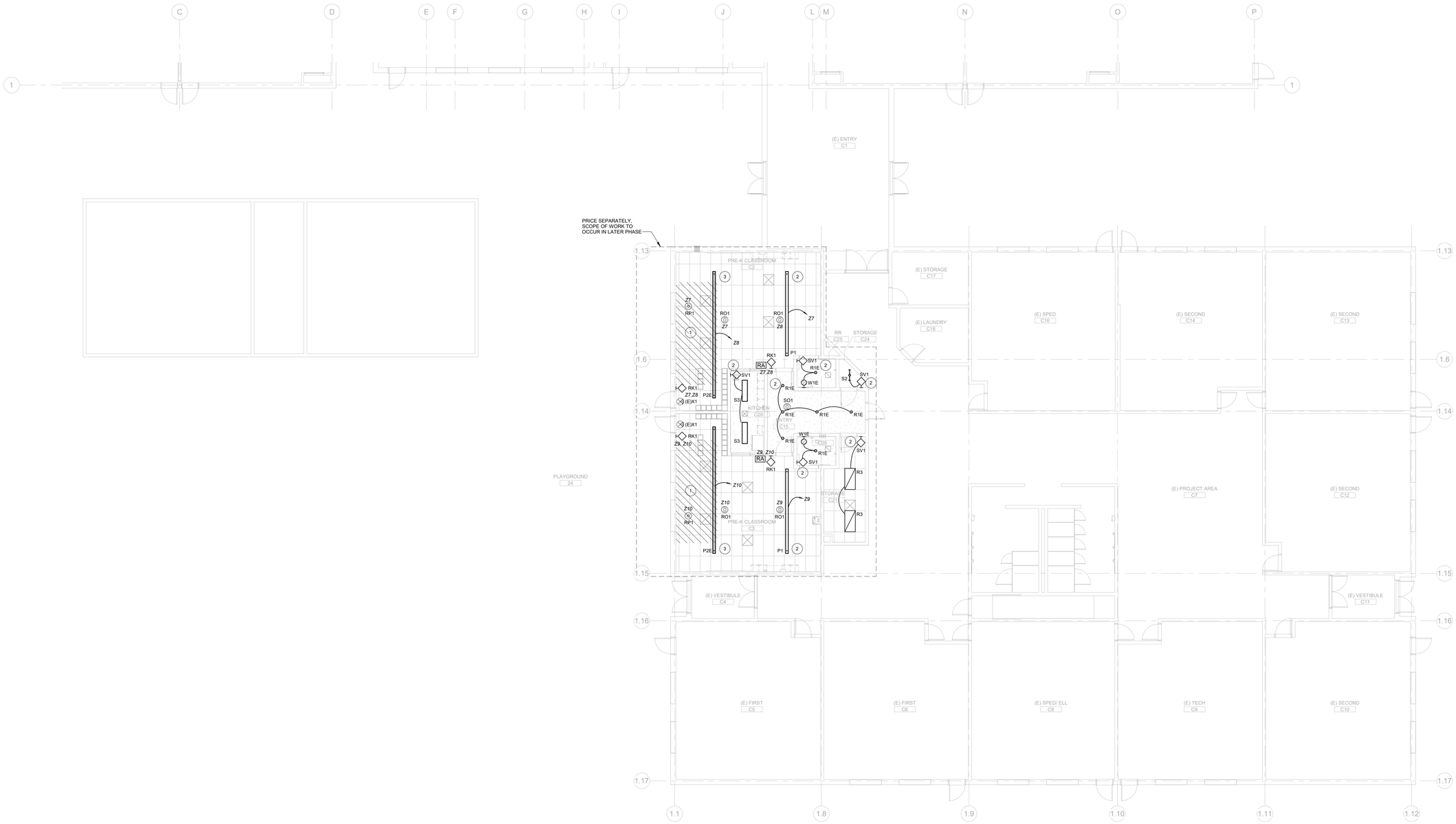


1 PRE-K PLAN AREA B LIGHTING RCP
SCALE: 1/8" = 1'-0"

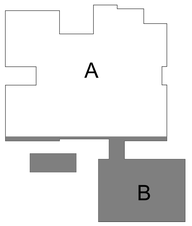


KEY PLAN


TAB Associates
*The Architectural Balance*
0056 Edwards Village Blvd.
Suite 210
Edwards, CO 81632
(970) 766-1470
fax: (970) 766-1471
email: tab@vail.net
www.tabassociates.com


Seal

COLORADO LICENSED
MARC A. SACCONI
42215
PROFESSIONAL ENGINEER
4-6-20

# STRAWBERRY PARK ELEMENTARY
## 39620 AMETHYST DRIVE
### Steamboat Springs, CO

Revisions:

| No | Description | Date |
|---|---|---|
| | | |

Issue Dates:
PERMIT SET
04.06.2020

Sheet Title:
PRE-K PLAN AREA B LIGHTING PLAN

Project No:
10182.00

Sheet No:
E2.12


BG BUILDINGWORKS
systems fulfilled
303.278.3820 www.bgbuildingworks.com
Project No. 10182.00

Copyright 2020
ALBUQUERQUE | AVON | DENVER | FORT COLLINS

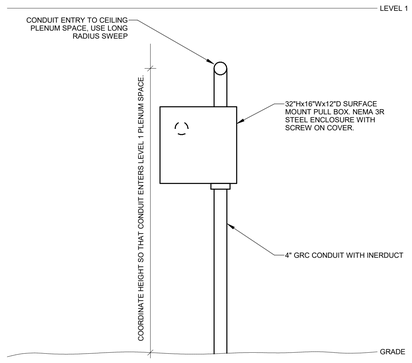


## SITE CONDUIT BUILDING ENTRY DIAGRAM

NO SCALE

E

NOTES:

1. REFER TO DIVISION 03 SPEC FOR CONCRETE BASE REQUIREMENTS.

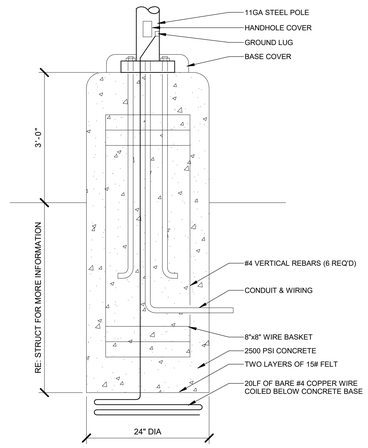


## POLE BASE DIAGRAM

NO SCALE

A

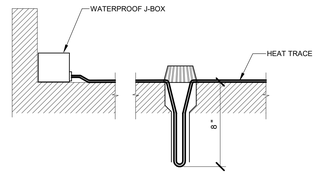


## ROOF DRAIN HEAT TRACE DIAGRAM

NO SCALE

B

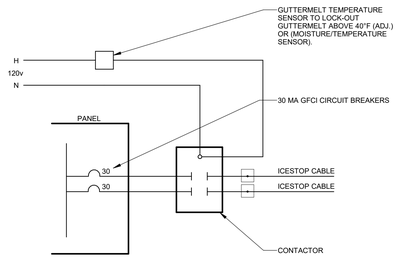


## GUTTERMELT CONTROL DIAGRAM

NO SCALE

C

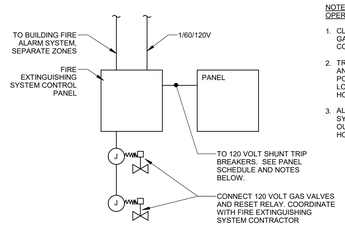


NOTE:
OPERATION OF EXTINGUISHING SYSTEM SHALL:

1. CLOSE GAS VALVES SERVING TO ALL GAS FIRED EQUIPMENT LOCATED UNDER COOKING EXHAUST HOODS.
2. TRIP ALL CIRCUIT BREAKER TO VAV-01 AND ALL CIRCUIT BREAKERS SERVING POWER TO ALL ELECTRIC EQUIPMENT LOCATED UNDER COOKING EXHAUST HOODS.
3. ALARM FROM EITHER FIRE SUPPRESSION SYSTEM SHALL STOP VAV-01 AND OUTLETS AND VALVES UNDER BOTH HOODS.

## TYP KITCHEN HOOD FIRE EXTINGUISHING SYSTEM CONTROL DIAGRAM

NO SCALE

D

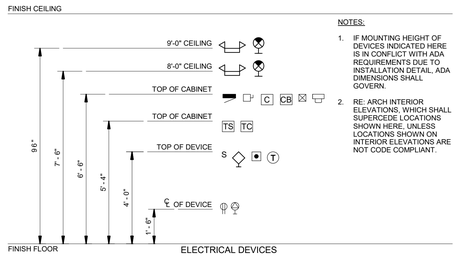


NOTES:

1. IF MOUNTING HEIGHT OF DEVICES INDICATED HERE IS IN CONFLICT WITH ADA REQUIREMENTS DUE TO INSTALLATION DETAIL, ADA DIMENSIONS SHALL GOVERN.
2. RE: ARCH INTERIOR ELEVATIONS, WHICH SHALL SUPERCEDE LOCATIONS SHOWN HERE, UNLESS LOCATIONS SHOWN ON INTERIOR ELEVATIONS ARE NOT CODE COMPLIANT.

## TYPICAL DEVICE MOUNTING HEIGHTS

SCALE: NONE

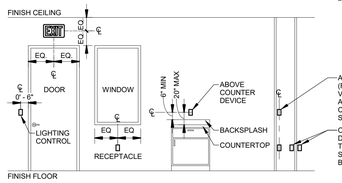


NOTES:

1. IF ALIGNMENT OF DEVICES INDICATED HERE IS IN CONFLICT WITH ADA REQUIREMENTS DUE TO INSTALLATION DETAIL, ADA DIMENSIONS SHALL GOVERN.
2. REFERENCE ARCHITECTURAL INTERIOR ELEVATIONS. LOCATIONS SHOWN ON INTERIOR ELEVATIONS SHALL SUPERCEDE LOCATIONS SHOWN HERE, UNLESS LOCATIONS SHOWN ON INTERIOR ELEVATIONS ARE NOT CODE COMPLIANT.

ALIGN POWER-BASED DEVICES (RECEPTACLES, SWITCHES, ETC.) VERTICALLY. DO NOT VERTICALLY ALIGN POWER AND COMMUNICATION DEVICES SIMULTANEOUSLY.

OFFSET COMMUNICATIONS DEVICES FROM POWER DEVICES TO EITHER OPPOSITE SIDE OF STUD BAY, OR ADJACENT STUD BAY.

## TYPICAL DEVICE ALIGNMENT

SCALE: NONE


TAB Associates
*The Architectural Balance*
0056 Edwards Village Blvd.
Suite 210
Edwards, CO 8132
(970) 766-1470
fax: (970) 766-1471
email: tab@vail.net
www.tabassociates.com


Seal

COLORADO LICENSED
MARC A. SACCONI
42215
PROFESSIONAL ENGINEER
4-10-20

# STRAWBERRY PARK ELEMENTARY
# 39620 AMETHYST DRIVE
## Steamboat Springs, CO

Revisions:

| No | Description | Date |
|---|---|---|
| | | |

Issue Dates:

PERMIT SET
04.06.2020

Sheet Title:

ELECTRICAL DIAGRAMS

Project No:
10182.00

Sheet No:
E3.1


BG BUILDINGWORKS
systems fulfilled
303.278.3820 www.bgbuildingworks.com
Project No. 10182.00 Copyright 2020
ALBUQUERQUE | AVON | DENVER | FORT COLLINS

# SSSD TECHNOLOGY SYSTEMS RESPONSIBILITY MATRIX

| COMPONENT | ENTITY | | SPECIFIC NOTES |
|---|---|---|---|
| | FURNISH | INSTALL | |
| **COMMON WORK** | | | |
| CABLE PATHWAY FIRE STOPPING DEVICE | E | E | |
| CONDUIT SLEEVES | E | E | |
| FIRE RATED FLOOR PENETRATION ASSEMBLY | E | E | |
| HANGER SUPPORTS FOR CABLE SUPPORTS | T | T | |
| HANGER SUPPORTS FOR CONDUITS | E | E | |
| MISCELLANEOUS FIRE STOPPING MATERIAL | GC | GC | |
| PENETRATION | GC | GC | |
| STRAPS/SLINGS | T | T | |
| WIDE BASE CABLE SUPPORTS (J-HOOKS) | T | T | |
| **ELECTRICAL FOR COMMUNICATIONS** | | | |
| BACKBOXES | E | E | |
| CABLE TRAY | E | E | |
| CABLE TRAY ELECTRICAL GROUNDING AND BONDING | E | E | |
| CONDUIT, FITTINGS, PULL STRINGS | E | E | |
| EXCAVATION, TRENCHING, BASE, BEDDING, BACKFILL | GC | GC | |
| FLOOR BOXES | E | E | |
| BONDING BUSBAR | E | E | |
| BONDING RISER CONDUCTORS | E | E | |
| HANGERS AND SUPPORTS FOR CABLE TRAY | E | E | |
| INNERDUCTS | E | E | |
| JUNCTION BOXES | E | E | |
| HANDHOLES, VAULTS, MANHOLES | GC | GC | |
| PLENUM ENCLOSURES | E | E | |
| POKE-THROUGHS | E | E | |
| PULL BOXES | E | E | |
| SURFACE RACEWAY | E | E | |
| WALL BOXES (AV) | E | E | |
| **TELECOMMUNICATIONS (STRUCTURED CABLING SYSTEM)** | | | |
| BACKBOARDS | GC | GC | COORDINATE WITH EC AND TC. |
| CABLE MANAGEMENT | T | T | |
| CABLE RUNWAY AND ACCESSORIES | T | T | |
| CONNECTORS (BACKBONE / HORIZONTAL CABLE) | T | T | |
| EQUIPMENT FRAMES AND ACCESSORIES | T | T | |
| EQUIPMENT RACKS AND ACCESSORIES | T | T | |
| FACEPLATES AND CONNECTORS | T | T | |
| HORIZONTAL CABLING | T | T | |
| IDENTIFICATION (LABELING) | T | T | |
| INSIDE PLANT BACKBONE CABLING | T | T | |
| OUTSIDE PLANT BACKBONE CABLING | T | T | |
| PATCH CORDS | O | O | |
| PATCH PANELS | T | T | |
| POWER DISTRIBUTION UNITS (PDU) | T | T | |
| SPLICE ENCLOSURES | T | T | |
| TELECOM ROOM EQUIPMENT GROUNDING AND BONDING | E | E | |
| TERMINATION BLOCKS | T | T | |
| **AUDIOVISUAL SYSTEMS** | | | |
| ***CLASSROOM*** | | | |
| AUDIO ENHANCEMENT SYSTEM | O | AV | |
| AUDIO ENHANCEMENT SYSTEM CABLING | O | AV | |
| INTERACTIVE SCREEN / SMART BOARD | O | O | GC TO PROVIDE BLOCKING TO SUPPORT DISPLAYS |
| EQUIPMENT ENCLOSURE (IN-CEILING, IN-WALL) | AV | AV | COORDINATE POWER INSTALLATION WITH EC |
| AV INTERFACE PLATES | AV | AV | |
| AV CABLING | O | AV | |
| HANGER WIRE SUPPORTS FOR AV EQUIP IN LAY-IN CEILINGS | AV | AV | |
| ***COMMON AREAS*** | | | |
| SOUND REINFORCEMENT LOUDSPEAKERS | AV | AV | |
| MICROPHONES | AV | AV | |
| ***GENERAL*** | | | |
| NETWORK HORIZONTAL CABLING FOR AV | T | T | |
| NETWORK PATCH CORDS (AT DEVICE) | O | O | |
| NETWORK SWITCHES AND POE | O | O | |
| LOW VOLTAGE CABLING | AV | AV | |
| **SCHOOL SYSTEMS** | | | |
| PUBLIC ADDRESS (PA) SYSTEM | O | O | |
| BELL / PROGRAM SYSTEM | O | O | |
| CLOCKS | O | O | |
| PA/PAGING LOUDSPEAKERS | O | AV | |
| CABLING FOR PA SYSTEM | AV | AV | |
| DISTRIBUTED ANTENNA SYSTEM (PUBLIC SAFETY) | GC | GC | |
| **ELECTRONIC SAFETY & SECURITY** | | | |
| ***ACCESS CONTROL SYSTEM*** | | | |
| ACCESS CONTROL SOFTWARE | O | O | |
| ACCESS CONTROL SYSTEM CABLING TERMINATION | S | S | |
| ACCESS CONTROL SYSTEM CABLING | S | S | |
| ACCESS CONTROL SYSTEM NETWORK CABLING | T | T | |
| CREDENTIAL READERS | S | S | COORDINATE WITH GC AND ARCH. |
| DOOR HARDWARE | GC | GC | COORDINATE WITH ARCH. |
| ELEVATOR INTEGRATION REQUIREMENTS | GC | GC | |
| HEAD END SERVER EQUIPMENT | O | O | |
| LOCKING MECHANISMS | S | S | COORDINATE WITH GC AND ARCH. |
| DOOR POSITION SWITCHES | S | S | COORDINATE WITH GC AND ARCH. |
| NETWORK BASED PATCH CORDS (AT DEVICE) | S | S | |
| NETWORK SERVER FOR ACCESS CONTROL SYSTEM | O | O | |
| NETWORK SWITCHES AND POE | O | O | |
| ***VIDEO SURVEILLANCE SYSTEM*** | | | |
| CAMERAS AND MOUNTING HARDWARE | O | O | |
| NETWORK BASED HORIZONTAL CABLING FOR CAMERAS | T | T | |
| NETWORK BASED PATCH CORDS FOR CAMERAS (AT DEVICE) | O | O | |
| NETWORK SWITCHES AND POE | O | O | |
| NETWORK VIDEO RECORDER, WORKSTATIONS AND SERVER | O | O | |
| SURGE PROTECTION DEVICES FOR CAMERAS | O | O | |
| VIDEO MANAGEMENT SOFTWARE | O | O | |
| **END-USER EQUIPMENT** | | | |
| ***NETWORK EQUIPMENT*** | | | |
| SWITCHES | O | O | |
| SERVERS | O | O | |
| FIBER PATCH CORDS - MDF/IDF | O | O | |
| COPPER PATCH CORDS - MDF/IDF | O | O | |
| COPPER PATCH CORDS - WORKSTATIONS/ROOMS | O | O | |
| MDF/IDF UPS | O | O | |
| ***WIRELESS ACCESS POINTS AND SYSTEM*** | | | |
| WI-FI SYSTEM | O | O | |
| ACCESS POINTS | O | O | |
| ***SERVICES*** | | | |
| TELEPHONE | O | O | |
| CATV | O | O | |
| DATA | O | O | |

**LEGEND**

GC = GENERAL CONTRACTOR
E = ELECTRICAL CONTRACTOR
T = TELECOMMUNICATIONS CONTRACTOR
AV = AUDIOVISUAL CONTRACTOR
S = SECURITY CONTRACTOR
O = OWNER

# TECHNOLOGY SYSTEMS LEGEND

NOTE:
ALL SYMBOLS SHOWN ON LEGEND ARE NOT NECESSARILY USED.

## ABBREVIATIONS

| | |
|---|---|
| AFC | ABOVE FINISHED CEILING |
| AFF | ABOVE FINISHED FLOOR |
| AFG | ABOVE FINISHED GRADE |
| AHJ | AUTHORITY HAVING JURISDICTION |
| AL | ALUMINUM |
| AP | ACCESS POINT |
| AWG | AMERICAN WIRE GAUGE |
| BAS | BUILDING AUTOMATION SYSTEM |
| BFG | BELOW FINISH GRADE |
| BMS | BUILDING MANAGEMENT SYSTEM |
| C | CONDUIT |
| CATV | COMMUNITY (CABLE) ANTENNA TELEVISION SYSTEM |
| CCTV | CLOSED CIRCUIT TELEVISION |
| CKT | CIRCUIT |
| CPU | CENTRAL PROCESSING UNIT |
| CT | CURRENT TRANSFORMER |
| DISP | GARBAGE DISPOSAL |
| DW | DISHWASHER |
| (E) | EXISTING |
| EM | EMERGENCY |
| EWC | ELECTRIC WATER COOLER |
| FA | FIRE ALARM |
| FACP | FIRE ALARM CONTROL PANEL |
| FBO | FURNISHED BY OTHERS |
| GC | GENERAL CONTRACTOR |
| GFI | GROUND FAULT CIRCUIT INTERRUPTER |
| GRD | GROUND |
| IAW | IN ACCORDANCE WITH |
| IC | INTERMEDIATE CROSS-CONNECT |
| IDF | INTERMEDIATE DISTRIBUTION FRAME |
| IG | ISOLATED GROUND |
| IR | INFRARED |
| LAN | LOCAL AREA NETWORK |
| MDF | MAIN DISTRIBUTION FRAME |
| (N) | NEW |
| NIC | NOT IN CONTRACT |
| NL | NIGHT LIGHT |
| NTS | NOT TO SCALE |
| OC | ON CENTER |
| PA | PUBLIC ADDRESS |
| REF | REFRIGERATOR |
| SPD | SURGE PROTECTION DEVICE |
| TTB | TELECOMMUNICATIONS TERMINAL BOARD |
| TVTB | TELEVISION TERMINAL BOARD |
| UG | UNDERGROUND |
| UNO | UNLESS NOTED OTHERWISE |
| V | VOLT |
| W | WATT |
| WAN | WIDE AREA NETWORK |
| WAP | WIRELESS ACCESS POINT |
| WLAN | WIRELESS LOCAL AREA NETWORK |
| WP | WEATHERPROOF |
| XP | EXPLOSIONPROOF |
| +18" | MOUNTING HEIGHT TO CENTERLINE OF DEVICE ABOVE FINISH FLOOR (VERIFY W/ ARCH ELEVATIONS) |

NOTES:

- LIGHT LINEWEIGHT INDICATES EXISTING
- HATCHED AREAS INDICATE DEMOLITION

## VOICE/DATA SYMBOLS

| | |
|---|---|
| | COMMUNICATIONS WALL OUTLET |
| | ANALOG WALL OUTLET |
| | COMBO ANALOG/COMMUNICATIONS WALL OUTLET |
| | COMMUNICATIONS FLOOR OUTLET |
| | ANALOG FLOOR OUTLET |
| | COMBO ANALOG/COMMUNICATIONS FLOOR OUTLET |
| | WIRELESS LAN (WI-FI) ACCESS POINT OUTLET - CEILING |
| | WIRELESS LAN (WI-FI) ACCESS POINT OUTLET - WALL |
| | POWER/TELECOM POLE |
| | MULTI-OUTLET WIREWAY |

NUMBER OF DATA JACKS — NUMBER OF VOICE JACKS — NUMBER OF FIBER JACKS — #D/#V/#F XX — OUTLET DESIGNATIONS (XX)

| | |
|---|---|
| POS - POINT-OF-SALE | |
| C - MOUNT ABOVE COUNTER | W - WALL PHONE PLATE WITH LUGS |
| E - ELEVATOR | EM - EMERGENCY SERVICES |

## INTERCOM/PROGRAM/BELL/CLOCK SYMBOLS

| | |
|---|---|
| | ANALOG CLOCK - WALL MOUNTED |
| | ANALOG CLOCK - CEILING MOUNTED |
| D | DIGITAL CLOCK - WALL MOUNTED |
| D | DIGITAL CLOCK - CEILING MOUNTED |
| C | CALL IN SWITCH |
| M IC | MASTER INTERCOM STATION |
| IC | INTERCOM STATION |
| CH | CHIME |
| B | BUZZER |
| B | BELL |
| S | INTERCOM LOUDSPEAKER - CEILING MOUNTED |
| S | INTERCOM LOUDSPEAKER - WALL MOUNTED |
| MIC S | TWO-WAY COMM SPEAKER - CEILING MOUNTED |
| MIC S | TWO-WAY COMM SPEAKER - WALL MOUNTED |

## ELECTRONIC SAFETY & SECURITY SYMBOLS

| | |
|---|---|
| | CEILING MOUNTED CAMERA |
| | WALL MOUNTED CAMERA |
| | CORNER MOUNTED CAMERA |
| MS | MULTISENSOR DOME CAMERA |
| FE | HEMISPHERIC DOME FISHEYE CAMERA |
| V IC | INTERCOM - VIDEO DOOR STATION |
| EC | TWO-WAY EMERGENCY COMMUNICATION SYSTEM - CALL BOX |
| M EC | TWO-WAY EMERGENCY COMMUNICATION SYSTEM - COMMAND CENTER |
| INT | INTRUSION DETECTION MAIN PANEL |
| ACP | ACCESS CONTROL MAIN PANEL |
| C REX | REQUEST-TO-EXIT - PANIC/CRASH BAR SENSOR |
| M REX | REQUEST-TO-EXIT - MOTION DETECTOR (PIR) |
| P REX | REQUEST-TO-EXIT - PUSH BUTTON |
| E CR L | CARD READER LOCKSET COMBO - POWER OVER ETHERNET |
| W CR L | CARD READER LOCKSET COMBO - WIRELESS (BATTERY POWERED) |
| CR | CARD READER - STANDALONE |
| Q L | ELECTRIC LOCK - LATCH RETRACTOR |
| R L | ELECTRIC LOCK - ROD RETRACTOR |
| S L | ELECTRIC LOCK - STRIKE |
| M L | ELECTRIC LOCK - MAGNETIC HOLD |
| | DOOR POSITION SWITCH - MAGNETIC CONTACT |
| W | DOOR POSITION SWITCH - WIRELESS |
| M | DOOR POSITION SWITCH - LATCHBOLT MONITOR |
| OH | DOOR POSITION SWITCH - OVERHEAD DOOR |
| RF | RF GATEWAY - WIRELESS LOCKSETS/DOOR POSITION SWITCHES |
| D | DOOR RELEASE BUTTON |
| P | PANIC BUTTON |
| ADA | ADA ACCESS CONTROL ACTUATOR |
| I | INTRUSION MOTION SENSOR - WALL MOUNT |
| I | INTRUSION MOTION SENSOR - CEILING MOUNT |
| K | SECURITY KEYPAD |

## GENERAL SYMBOLS

| | |
|---|---|
| J | JUNCTION BOX |
| J | WALL MOUNTED JUNCTION BOX |
| J | FLOOR MOUNTED JUNCTION BOX |
| | CONDUIT RUN |
| | CONDUIT RUN BELOW GRADE |
| | CONDUIT UP |
| | CONDUIT DOWN |
| | CABLE RUNWAY |
| – CT12/4 – | CABLETRAY (PREMISES; NUMBER INDICATES WIDTH/DEPTH) |
| | GROUNDING BUSBAR (TGB/TMGB) |
| | DEMARCATION POINT |
| | WALL-MOUNT CABINET |
| | EQUIPMENT RACK |
| | WALL-MOUNTED EQUIPMENT RACK |

## AUDIOVISUAL SYMBOLS

| | |
|---|---|
| TV | TELEVISION OUTLET - WALL MOUNTED |
| TV | TELEVISON OUTLET - CEILING MOUNTED |
| TV | TELEVISION OUTLET - FLOORBOX |
| DS TV | DIGITAL SIGNAGE |
| AV | AUDIOVISUAL OUTLET - WALL MOUNTED |
| AV | AUDIOVISUAL OUTLET - CEILING MOUNTED |
| AV | AUDIOVISUAL OUTLET - FLOORBOX |
| S | LOUDSPEAKER - CEILING MOUNTED |
| S | LOUDSPEAKER - WALL MOUNTED |
| SPK | LOUDSPEAKER OUTLET |
| M | MICROPHONE OUTLET - WALL MOUNTED |
| M | MICROPHONE OUTLET - CEILING MOUNTED |
| M | MICROPHONE OUTLET - FLOORBOX |
| | POINT SOURCE LOUDSPEAKER |
| | PROJECTION SCREEN, TV, OR OTHER DISPLAY EQPT |
| | VIDEO PROJECTOR |
| | SPEAKER ZONE HOMERUN |

## SCHEMATIC/FUNCTIONAL SYMBOLS

| | |
|---|---|
| | STRUCTURED CABLING CROSS-CONNECT FIELD |
| | SERVICE PROVIDER DEMARCATION POINT |
| | AMPLIFIER |
| | CATV SPLITTER |
| | CATV DIRECTIONAL COUPLER |
| | CATV 4-WAY TAP |
| | CATV 8-WAY TAP |
| | EQUIPMENT (AS INDICATED) |
| | POTENTIAL TRANSFORMER (CONSTANT VOLTAGE AUDIO) |
| | LOUDSPEAKER |
| V | VOLUME CONTROL |
| | VIDEO PROJECTOR |
| | CONNECTION |
| M | METER |
| | NORMALLY OPEN CONTACT |
| | NORMALLY CLOSED CONTACT |
| | GROUND |
| | COLD WATER GROUND CONNECTION |
| | BUILDING STEEL GROUND CONNECTION |

## CONTROL SYMBOLS

| | |
|---|---|
| S | SWITCH - 120V |
| S K | SWITCH - 120V KEYED |
| LV | SWITCH - LOW VOLTAGE |
| CK | CONTROL KEYPAD |
| CT | CONTROL TOUCHSCREEN (WALL MOUNT) |
| CT | CONTROL TOUCHSCREEN (WIRELESS) |
| V | VOLUME CONTROL |
| HH | CONTROL - HANDHELD REMOTE |
| | OCC SENSOR - CEILING MOUNTED |
| FT | CONTROL TOUCHSCREEN FLIP TOP TABLE BOX |

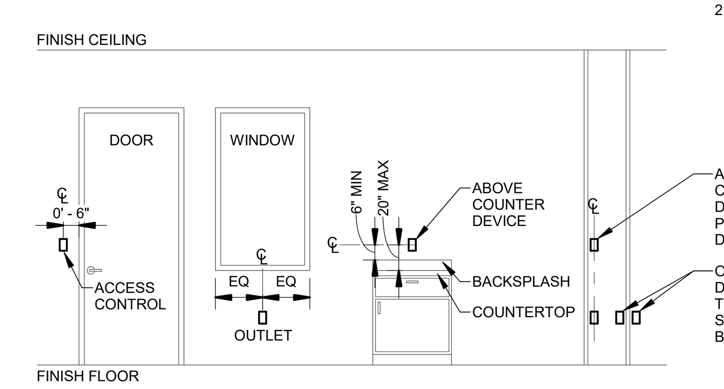


NOTES:

1. IF ALIGNMENT OF DEVICES INDICATED HERE IS IN CONFLICT WITH ADA REQUIREMENTS DUE TO INSTALLATION DETAIL, ADA DIMENSIONS SHALL GOVERN.
2. REFERENCE ARCHITECTURAL INTERIOR ELEVATIONS. LOCATIONS SHOWN ON INTERIOR ELEVATIONS SHALL SUPERCEDE LOCATIONS SHOWN HERE, UNLESS LOCATIONS SHOWN ON INTERIOR ELEVATIONS ARE NOT CODE COMPLIANT.

ALIGN DEVICES (OUTLETS, CONTROLS, ETC.) VERTICALLY. DO NOT VERTICALLY ALIGN POWER AND COMMUNICATIONS DEVICES SIMULTANEOUSLY.

OFFSET COMMUNICATIONS DEVICES FROM POWER DEVICES TO EITHER OPPOSITE SIDE OF STUD BAY, OR ADJACENT STUD BAY.

## TYPICAL DEVICE ALIGNMENT

SCALE: NONE

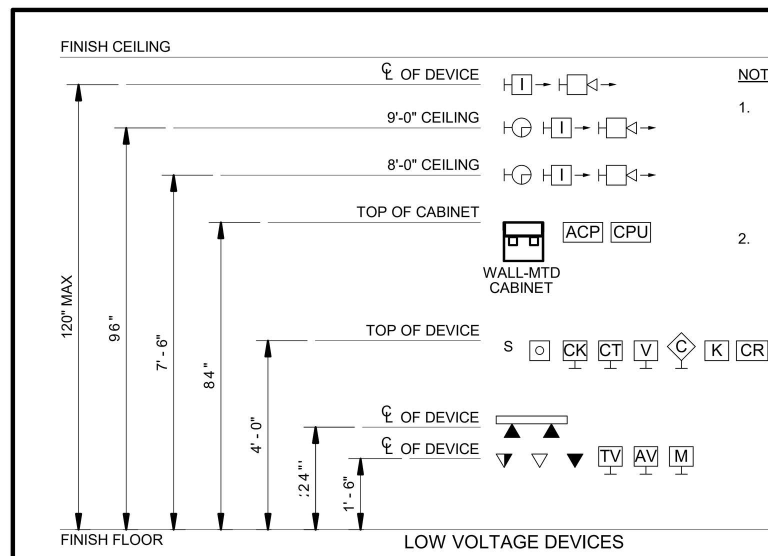


NOTES:

1. IF MOUNTING HEIGHT OF DEVICES INDICATED HERE IS IN CONFLICT WITH ADA REQUIREMENTS DUE TO INSTALLATION DETAIL, ADA DIMENSIONS SHALL GOVERN.
2. RE: ARCH INTERIOR ELEVATIONS, WHICH SHALL SUPERCEDE LOCATIONS SHOWN HERE, UNLESS LOCATIONS SHOWN ON INTERIOR ELEVATIONS ARE NOT CODE COMPLIANT.

## TYPICAL DEVICE MOUNTING HEIGHTS

SCALE: NONE

## DEVICE COORDINATION NOTE:

CONTRACTOR SHALL NOT SCALE THESE DRAWINGS TO DETERMINE LOCATIONS OF DEVICES SHOWN. IF EXACT DIMENSIONS ARE NECESSARY TO BE ADHERED TO, DIMENSIONS ARE INDICATED WITH CONSTRUCTION DOCUMENTS.

IT IS THE CONTRACTOR'S RESPONSIBILITY TO REFER TO THE ARCHITECTURAL INTERIOR ELEVATIONS, DETAILS AND REFLECTED CEILING PLANS TO DETERMINE EXACT LOCATIONS OF COMPONENTS. IT IS THE CONTRACTOR'S RESPONSIBILITY TO REFER TO THE ARCHITECTURAL INTERIOR.

## REMODEL/RENOVATION NOTE:

CONTRACTOR MUST KEEP IN MIND THAT THIS IS A REMODEL PROJECT. READ GENERAL NOTES CAREFULLY. CONTRACTORS MUST COORDINATE NEW AND EXISTING CONDITIONS FOR INSTALLATION OF THE WORK.

CONTRACTOR SHALL NOTIFY ENGINEER IMMEDIATELY OF FIELD CONDITIONS DISCOVERED DURING DEMOLITION THAT VARY FROM THOSE INDICATED HEREIN.

## PATHWAY COMPLIANCE NOTE:

THIS PROJECT REQUIRES INSTALLATION OF PATHWAYS MORE STRINGENT THAN NFPA 70 REQUIREMENTS. IT IS THE CONTRACTOR'S RESPONSIBILITY TO UNDERSTAND AND INSTALL TO ANSI/TIA-569-B PATHWAY STANDARDS.

UNFAMILIARITY WITH THESE SPECIFIED STANDARDS DOES NOT RELIEVE THE CONTRACTOR FROM THE PROJECT REQUIREMENTS AND SPECIFICATIONS. NON-COMPLIANT PATHWAYS WILL NOT BE ACCEPTED.

## FIRE ALARM NOTE:

FIRE ALARM SYSTEM DESIGN AND INSTALLATION IS BY DESIGN-BUILD CONTRACTOR. REQUIREMENTS OR CODE AMENDMENTS BY THE AUTHORITY HAVING JURISDICTION (AHJ) SHALL DICATE SYSTEM REQUIREMENTS.

FIRE ALARM SHOP DRAWINGS SHALL BE PROVIDED BY THE FIRE ALARM SYSTEM CONTRACTOR AS A DEFERRED SUBMITTAL PER IBC 107.3.4.1.

# TECHNOLOGY SHEET INDEX

| # | TITLE | ISSUE LOG: DD - 02.20.2020 | CD PROGRESS - 03.13.2020 | 95% CD - 03.30.2020 | PERMIT SET - 04.06.2020 | | | | | |
|---|---|---|---|---|---|---|---|---|---|---|
| T0.0 | TECH COVER SHEET | √ | √ | √ | √ | | | | | |
| TD2.1 | MAIN LEVEL AREA A DEMO TECH PLAN | √ | √ | √ | √ | | | | | |
| TD2.2 | PRE-K PLAN AREA B DEMO TECH PLAN | √ | √ | √ | √ | | | | | |
| T2.1 | MAIN LEVEL AREA A TECH PLAN | √ | √ | √ | √ | | | | | |
| T2.2 | PRE-K PLAN AREA B TECH PLAN | √ | √ | √ | √ | | | | | |
| T4.1 | TECHNOLOGY ENLARGED PLANS | √ | √ | √ | √ | | | | | |
| T5.1 | TECHNOLOGY RISER DIAGRAMS | √ | √ | √ | √ | | | | | |
| T5.2 | TECHNOLOGY FUNCTIONAL DIAGRAMS | √ | √ | √ | √ | | | | | |
| T6.0 | TECHNOLOGY DIAGRAMS | √ | √ | √ | √ | | | | | |

ISSUE LOG KEY:
'√' ISSUED AS PART OF SET
' . ' NOT PART OF SET
' * ' ISSUED FOR INFORMATION ONLY

# GENERAL NOTES:

1. THESE DRAWINGS ACCOMPANY THE PUBLISHED CONSTRUCTION DOCUMENT SPECIFICATION BOOK (PROJECT MANUAL).
2. DO NOT SCALE DRAWINGS. VERIFY DIMENSIONS ON ARCHITECTURAL DRAWINGS AND IN FIELD PRIOR TO COMMENCEMENT OF WORK.
3. WORK ASSOCIATED WITH TECHNOLOGY SYSTEMS REQUIRES CAREFUL, DETAILED COORDINATION, BOTH PREPARTORY AND ON-SITE, BETWEEN THE GENERAL CONTRACTOR, ELECTRICAL CONTRACTOR, AND THE TECHNOLOGY SYSTEMS CONTRACTOR(S). LACK OF PLANNING, COORDINATION, OR SKILL ON PART OF ANY PARTY ASSOCIATED WITH THE SCOPE OF WORK INDICATED WILL NOT BE ACCEPTED AS REASON FOR INSTALLATION THAT DOES NOT MEET SPECIFICATIONS OR INDUSTRY STANDARDS.
4. VISIT SITE PRIOR TO BID AND VERIFY THAT CONDITIONS ARE AS INDICATED. CONTRACTOR SHALL INCLUDE IN HIS BID COSTS REQUIRED TO MAKE HIS WORK MEET EXISTING CONDITIONS.
5. IF WORK ON LIVE NETWORKS OR SYSTEMS IS TO BE DONE, SYSTEM DOWNTIME SHALL BE PERMITTED ONLY AT TIMES APPROVED BY OWNER – IN WRITING. WORK WHICH COULD RESULT IN AN ACCIDENTAL OUTAGE SHALL BE PERFORMED WITH THE OWNER'S IT/IS STAFF AND/OR MAINTENANCE PERSONNEL ADVISED AND AWARE OF SUCH WORK.
6. COMMUNICATIONS SERVICES SHALL BE MAINTAINED TO EXISTING AREAS DURING CONSTRUCTION IF SUCH AREAS ARE TO REMAIN LIVE. CONTRACTOR SHALL PROVIDE NECESSARY MEANS AND PROTECTION TO ENSURE UPTIME.
7. REVIEW ENTIRE CONTRACT DOCUMENT PACKAGE (INCLUDING ARCHITECTURAL, MECHANICAL, ELECTRICAL, AND OTHER DRAWINGS AND SPECIFICATIONS) PRIOR TO BID.
8. WORK SHALL BE PERFORMED IN A WORKMANLIKE MANNER TO THE SATISFACTION OF THE ARCHITECT AND ENGINEER.
9. WORK, MATERIALS, AND EQUIPMENT SHALL CONFORM TO THE LATEST EDITIONS OF LOCAL AND STATE ADOPTED CODES AND ORDINANCES. 2014 EDITION OF NFPA 70 – NATIONAL ELECTRICAL CODE SHALL BE MET AT A MINIMUM. APPLICABLE VOLUMES OF NFPA (NFPA 72, NFPA 75, NFPA 76, NFPA 99, NFPA 101, ETC.) SHALL BE ADHERED TO AT A MINIMUM.
10. WORK, MATERIALS, AND EQUIPMENT SHALL CONFORM TO THE LATEST APPLICABLE STANDARDS AND RECOMMENDATIONS AS PUBLISHED BY AMERICAN NATIONAL STANDARDS INSTITUTE (ANSI), TELECOMMUNICATIONS INDUSTRY ASSOCIATION (TIA), ELECTRONIC INDUSTRIES ALLIANCE (EIA), INSULATED CABLE ENGINEERS ASSOCIATION (ICEA), INSTITUTE OF ELECTRICAL AND ELECTRONICS ENGINEERS (IEEE), SECURITY INDUSTRY ASSOCIATION (SIA), BUILDING INDUSTRY CONSULTING SERVICES INTERNATIONAL (BICSI), AND INFOCOMM INTERNATIONAL.
11. PROVIDE WITH SHOP DRAWING SUBMITTAL, 1/4" SCALE LAYOUT DRAWINGS OF ROOMS WITH COMMUNICATIONS, AUDIOVISUAL, AND SECURITY DISTRIBUTION OR HEAD-END EQUIPMENT. LAYOUTS SHALL SHOW LOCATIONS OF, AND SHALL BE COORDINATED WITH ELECTRICAL AND MECHANICAL EQUIPMENT. ALL EQUIPMENT SHALL BE DRAWN TO SCALE.
12. CONTRACTOR'S FAILURE TO ORDER OR RELEASE ORDER FOR MATERIALS AND/OR EQUIPMENT WILL NOT BE ACCEPTED AS A REASON TO SUBSTITUTE ALTERNATE MATERIALS, EQUIPMENT, OR INSTALLATION METHODS.
13. VERIFY EXACT LOCATIONS OF EXISTING AND NEW UNDERGROUND UTILITIES, PIPING, AND RACEWAY SYSTEMS PRIOR TO TRENCHING. PROVIDE NECESSARY TRENCHING, BACKFILL, EXCAVATION, SUPPORTS, BACKBONES/SERVICE ENTRANCES (CONDUIT AND/OR CABLING), PULLBOXES, HANDHOLES, MANHOLES, PEDESTALS, SAWCUTTING AND PATCHING, CONCRETE/PAVING, ETC. REQUIRED. BACKFILL TRENCHES TO 90 PERCENT COMPACTION AND PATCH TO MATCH EXISTING. CONTRACTOR SHALL OBTAIN AND VERIFY EXACT SERVICE PROVIDER DRAWINGS AND REQUIREMENTS. CONTRACTOR IS TO SUBMIT A COMPLETE CONSTRUCTION DRAWING SET TO THE SERVICE PROVIDERS WITHIN 10 DAYS OF AWARD OF CONTRACT. COORDINATE TIMELINE OF THEIR REVIEW, APPROVAL, CONSTRUCTION SCHEDULING AND INSTALLATION OF THE PEDESTALS OR PROVIDER-OWNED MANHOLES WITH THE SERVICE PROVIDER. NOTIFY OWNER OF ANY SCHEDULING CONFLICTS.
14. FIELD-VERIFY EXISTING INFRASTRUCTURE TO BE RECONNECTED TO NEW OR EXISTING DISTRIBUTION (PATCHPANELS, WIRING BLOCKS, ETC.). PROVIDE ADDITIONAL MATERIAL AS NECESSARY TO COMPLETE.
15. EXISTING SYSTEMS AND CONDITIONS SHOWN ON DRAWINGS FOR EXISTING BUILDINGS ARE TO BE NOTED "FOR GUIDANCE ONLY." CONTRACTOR SHALL FIELD CHECK ALL EXISTING CONDITIONS PRIOR TO BIDDING. CONTRACTOR SHALL INCLUDE IN THEIR BID AN ALLOWANCE FOR REMOVAL AND/OR RELOCATION OF EXISTING CONDUITS, CABLES, DEVICES, FIXTURES, OR OTHER EQUIPMENT AS INDICATED ON THE PLANS OR AS REQUIRED TO COORDINATE AND ADAPT NEW AND EXISTING TECHNOLOGY SYSTEMS TO ALL OTHER WORK AS REQUIRED.
16. PROVIDE TECHNOLOGY SYSTEMS DEMOLITION REQUIRED. REFER TO ARCHITECTURAL, TECHNOLOGY SYSTEMS AND ELECTRICAL DEMOLITION DRAWINGS FOR LOCATION AND EXTENT OF DEMOLITION REQUIRED. CONTRACTOR SHALL VISIT SITE PRIOR TO BID TO DETERMINE EXTENT OF WORK INVOLVED. PROVIDE LABOR AND MATERIALS REQUIRED TO MAINTAIN AND/OR RESTORE CONTINUITY OF SERVICE TO EXISTING DEVICES.
17. PROVIDE ALL NECESSARY DEMOLITION TO REMOVE EXISTING UNUSED CONDUIT, CABLE, J-BOXES, OUTLETS, DEVICES, AND THE LIKE, COMPLETE WITH ASSOCIATED CABLING TO DISTRIBUTION LOCATION. WHERE IT IS NOT FEASIBLE TO REMOVE THE ABOVE, OUTLET SHALL BE ABANDONED, CABLE REMOVED, AND BLANK COVER PLATES PROVIDED.
18. ALL (E) EQUIPMENT BEING REMOVED SHALL BE RECYCLED IN ACCORDANCE WITH APPLICABLE EPA AND LOCAL REQUIREMENTS.
19. VERIFY EXACT LOCATION OF EQUIPMENT TO BE FURNISHED BY OTHERS PRIOR TO ROUGH-IN.
20. INSTALL ALL MATERIALS IN ACCORDANCE WITH THE MANUFACTURER'S RECOMMENDATIONS. ANY DEVIATIONS SHALL BE BROUGHT TO THE ARCHITECT/ENGINEER'S ATTENTION PRIOR TO INSTALLATION.
21. FINAL CONNECTIONS TO EQUIPMENT SHALL BE IN ACCORDANCE WITH MANUFACTURER'S APPROVED WIRING DIAGRAMS, DETAILS, AND INSTRUCTIONS. IT SHALL BE THE CONTRACTOR'S RESPONSIBILITY TO PROVIDE MATERIALS AND EQUIPMENT COMPATIBLE WITH EQUIPMENT ACTUALLY SUPPLIED.
22. CONTRACTOR SHALL BE RESPONSIBLE FOR REPLACING EQUIPMENT WHICH IS DAMAGED DUE TO INCORRECT FIELD WIRING PROVIDED UNDER THIS SECTION OR FACTORY WIRING IN EQUIPMENT PROVIDED UNDER THIS SECTION.
23. WHERE THE RE-USE OF EXISTING EQUIPMENT, CONDUITS, CABLES, AND DEVICES IS PERMISSIBLE, MAKE CERTAIN THAT THESE COMPONENTS COMPRISE A COMPLETE AND OPERABLE SYSTEM. PROVIDE ADDITIONAL MATERIAL AS NECESSARY TO (RE) ESTABLISH OPERATION.
24. WHERE EXISTING PATHWAYS (CONDUIT AND BOXES) ARE TO BE REUSED, ENSURE CABLING PASSES THROUGH NO OUTLET OR JUNCTION BOX WHICH MAY BE RENDERED INACCESSIBLE BY THE ARCHITECTURAL OR STRUCTURAL CHANGES TO BE MADE TO THE BUILDING.
25. EXISTING CONDUITS, CABLE, AND DEVICES WHICH ARE NOT INDICATED FOR REUSE SHALL BECOME THE PROPERTY OF CONTRACTOR. EQUIPMENT AND DISTRIBUTION EQUIPMENT (PATCHPANELS, WIRING BLOCKS, ETC.) SHALL BE RETURNED TO THE OWNER UNLESS OTHERWISE EXPLICITLY STATED BY OWNER IN WRITING.
26. ALL SYSTEMS COMPONENTS SHALL BE LISTED OR LABELED BY U.L. OR OTHER RECOGNIZED TESTING FACILITY.
27. SYSTEMS SHALL BE TESTED AND VERIFIED UPON COMPLETION OF INSTALLATION. SYSTEMS THAT DO NOT PASS INDUSTRY STANDARD TESTS SHALL BE CORRECTED AT NO ADDITIONAL COST TO OWNER.
28. GUARANTEE THE INSTALLATION AGAINST DEFECTS IN MATERIALS AND WORKMANSHIP WHICH MAY OCCUR UNDER NORMAL USAGE FOR A PERIOD OF ONE YEAR AFTER OWNER'S ACCEPTANCE. DEFECTS SHALL BE PROMPTLY REMEDIED WITHOUT COST TO THE OWNER.
29. PROVIDE SOLUTION-BASED EXTENDED WARRANTIES FOR STRUCTURED CABLING SYSTEMS. PROVIDE ALL NECESSARY DOCUMENTATION TO OWNER PRIOR TURNOVER.
30. CONTRACTOR SHALL MAINTAIN A CURRENT SET OF AS-BUILT RECORD DRAWINGS ON-SITE WHICH SHALL BE AVAILABLE FOR REVIEW DURING ENGINEER'S SITE OBSERVATIONS. UPON COMPLETION, PROVIDE OFFICIAL SET OF RECORD DRAWINGS TO ARCHITECT, IN FORMAT AS REQUESTED BY OWNER. DRAWINGS SHALL INCLUDE ALL ADDENDUM ITEMS, CHANGE ORDERS, FIELD ALTERATIONS, REROUTINGS, ETC.
31. CONDUITS FOR TECHNOLOGY SYSTEMS LARGER THAN TRADE SIZE 1 (1") SHALL HAVE LONG-RADIUS SWEEPS AT ALL CHANGES IN DIRECTION. LONG-RADIUS SWEEPS SHALL BE MINIMUM 12X CONDUIT DIAMETER.
32. OUTLET BOXES SHALL BE MINIMUM 4-11/16"x4-11/16"x2-1/8", METALLIC OR NONMETALLIC AS PROJECT REQUIREMENTS DICTATE.
33. FLEXIBLE METAL CONDUIT SHALL NOT BE USED AS CABLE PATHWAY. ONLY SMOOTH-WALLED METALLIC CONDUIT OR TUBING MAY BE USED. ALTERNATELY, PLASTIC-TYPE (ENT AND/OR PVC) TUBING MAY BE USED.
34. ALL METALLIC SUPPORT COMPONENTS (CONDUITS, SLEEVES, PATHWAYS, CABLETRAY, J-HOOKS OR OTHER SUPPORT, RACKS, CABINETS, ETC.) SHALL BE BONDED WITH NO SMALLER THAN #6AWG INSULATED (GREEN) COPPER BONDING CONDUCTORS. ALL COMPONENTS SHALL BE BONDED TO TELECOMMUNICATIONS GROUNDING BUS. REFERENCE DRAWINGS AND ANSI J-STD-607-A STANDARD.
35. ALL EMPTY RACEWAY SYSTEMS SHALL HAVE A NYLON PULLTAPE INSTALLED. PULLTAPE SHALL HAVE PHYSICAL LENGTH MARKINGS AND BE RATED FOR 200-LB STRENGTH. EMPTY PATHWAYS SHALL BE IDENTIFIED AS SUCH AT ALL JUNCTION BOXES, PULLBOXES, AND OUTLET/DEVICE BOXES, USING PERMANENT LABELING. LABELING TAG SHALL INDICATE INTENDED USE OF CONDUIT, LOCATION OF PATHWAY ORIGINATION, AND LOCATION OF TERMINATION OF EACH INDIVIDUAL CONDUIT.
36. ALL CABLING SHALL BE INDEPENDENTLY SUPPORTED FROM STRUCTURAL ELEMENTS. CABLING IS NOT ALLOWED TO COME IN CONTACT WITH PIPING, ELECTRICAL CIRCUITS/CONDUITS, LIGHTING FIXTURES, DUCTWORK, OR ANY OTHER INSTALLED SYSTEM. CABLING SHALL NOT USE STRUCTURAL MEMBERS ALONE AS SUPPORT; APPROPRIATE J-HOOKS, BRIDLE RINGS, OR SIMILAR SHALL BE USED. CABLING SHALL BE INSTALLED WITH SUPPORTS NO GREATER THAN 5'-0" SPACING.
37. ALL EQUIPMENT SHALL BE INDEPENDENTLY SUPPORTED FROM STRUCTURAL ELEMENTS.
38. PROVIDE PULLBOXES ALONG CONDUIT RUNS AT 100 FEET INTERVALS OR EVERY 180-DEGREES OF BENDS, OR BOTH.
39. CONDUITS MAY NOT CHANGE DIRECTION MORE THAN 90 DEGREES AT ANY SINGLE BEND.
40. CONDULETTE FITTINGS MAY NOT BE USED TO CHANGE PATHWAY DIRECTION AT ANY TIME.


BG BUILDINGWORKS
systems fulfilled
303.278.3820 www.bgbuildingworks.com
Project No. 10182.00 Copyright 2020
ALBUQUERQUE | AVON | DENVER | FORT COLLINS



TAB Associates
The Architectural Balance
0056 Edwards Village Blvd.
Suite 210
Edwards, CO 8132
(970) 766-1470
fax: (970) 766-1471
email: tab@vail.net
www.tabassociates.com


Seal

COLORADO LICENSED MARC A. SACCONI 42215 PROFESSIONAL ENGINEER
4-6-20

**STRAWBERRY PARK ELEMENTARY**
**39620 AMETHYST DRIVE**
**Steamboat Springs, CO**

| Revisions: | | |
|---|---|---|
| No | Description | Date |

Issue Dates:
PERMIT SET
04.06.2020

Sheet Title:
TECH COVER SHEET

Project No:
10182.00

Sheet No:
T0.0

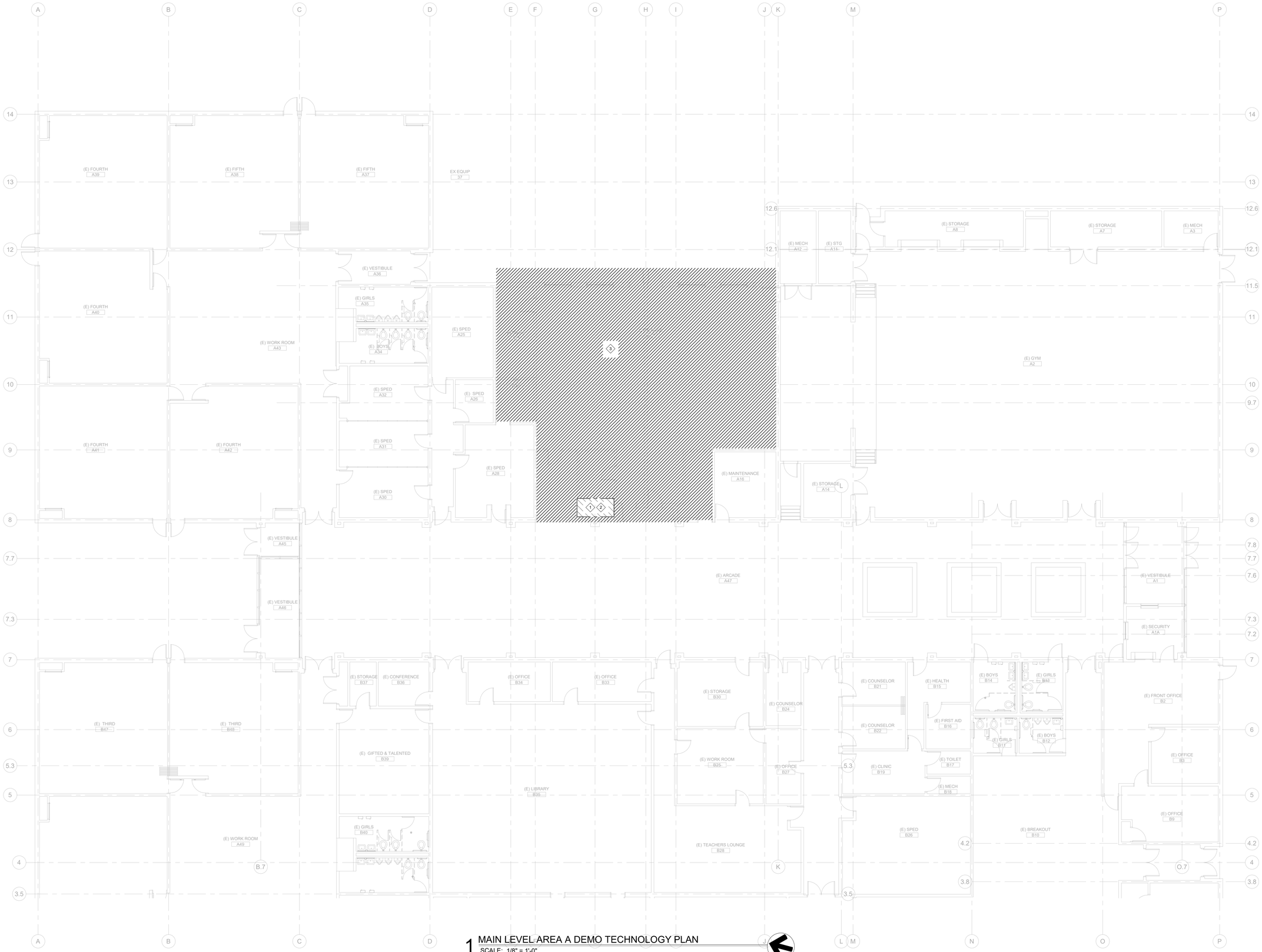


1 MAIN LEVEL AREA A DEMO TECHNOLOGY PLAN
SCALE: 1/8" = 1'-0"

## NOTES:

1. INFORMATION REGARDING EXISTING DEVICE LOCATIONS AND CABLE ROUTING IS NOT AVAILABLE. DEMOLITION PLAN INDICATES A DESIRED SCOPE OF WORK; THE CONTRACTOR SHALL BE RESPONSIBLE TO VERIFY IN FIELD PRIOR TO START OF WORK.
2. ALL SYSTEMS LOCATED OUTSIDE THE AREA OF DEMOLITION ARE INTENDED TO REMAIN OPERABLE.
3. CONTRACTOR SHALL COORDINATE WITH OWNER AND ENSURE ALL EQUIPMENT TO BE RETAINED BY OWNER HAS BEEN REMOVED PRIOR TO DEMOLITION WORK, INCLUDING COMPUTER EQUIPMENT, WIRELESS CLOCKS, PROJECTION SCREENS, INTERACTIVE WHITEBOARDS, ETC.

## DEMO NOTES

1 EXISTING TELECOM ROOM / IDF. REMOVE ALL EQUIPMENT, CABLING, TERMINATION BLOCKS AND ASSOCIATED DEVICES AND PRESERVE FOR REUSE. HORIZONTAL CABLING AND PATCH PANELS SHALL REMAIN INTACT AND BE RELOCATED DURING RENOVATION.

2 BACKBONE CABLING TERMINATING IN THE (E) IDF SHALL BE BACK PULLED TO ABOVE CEILING AND EVALUATED TO DETERMINE IF LENGTH IS SUFFICIENT TO EXTEND TO NEW EQUIPMENT RACK LOCATION.

3 AREA OF GENERAL DEMOLITION. REMOVE ALL LOW VOLTAGE EQUIPMENT AND RETURN TO OWNER. REMOVE ALL COMMUNICATIONS CABLING FROM OUTLET BACK TO PATCH PANEL.


TAB Associates
*The Architectural Balance*
0056 Edwards Village Blvd.
Suite 210
Edwards, CO 81632
(970) 766-1470
fax: (970) 766-1471
email: tab@vail.net
www.tabassociates.com


Seal

# STRAWBERRY PARK ELEMENTARY
# 39620 AMETHYST DRIVE
## Steamboat Springs, CO

Revisions:

| No | Description | Date |
|---|---|---|
| | | |

Issue Dates:
PERMIT SET
04.06.2020

Sheet Title:
MAIN LEVEL AREA A DEMO TECH PLAN

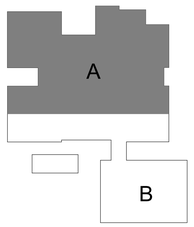


KEY PLAN


BG BUILDINGWORKS
systems fulfilled
303.278.3820 www.bgbuildingworks.com
Project No. 10182.00 Copyright 2020
ALBUQUERQUE | AVON | DENVER | FORT COLLINS


Project No:
10182.00

Sheet No:
TD2.1

## NOTES:

1. INFORMATION REGARDING EXISTING DEVICE LOCATIONS AND CABLE ROUTING IS NOT AVAILABLE. DEMOLITION PLAN INDICATES A DESIRED SCOPE OF WORK; THE CONTRACTOR SHALL BE RESPONSIBLE TO VERIFY IN FIELD PRIOR TO START OF WORK.
2. ALL SYSTEMS LOCATED OUTSIDE THE AREA OF DEMOLITION ARE INTENDED TO REMAIN OPERABLE.
3. CONTRACTOR SHALL COORDINATE WITH OWNER AND ENSURE ALL EQUIPMENT TO BE RETAINED BY OWNER HAS BEEN REMOVED PRIOR TO DEMOLITION WORK, INCLUDING COMPUTER EQUIPMENT, WIRELESS CLOCKS, PROJECTION SCREENS, INTERACTIVE WHITEBOARDS, ETC.

## DEMO NOTES

1 AREA OF GENERAL DEMOLITION. REMOVE ALL LOW VOLTAGE EQUIPMENT AND RETURN TO OWNER. REMOVE ALL COMMUNICATIONS CABLING FROM OUTLET BACK TO PATCH PANEL.

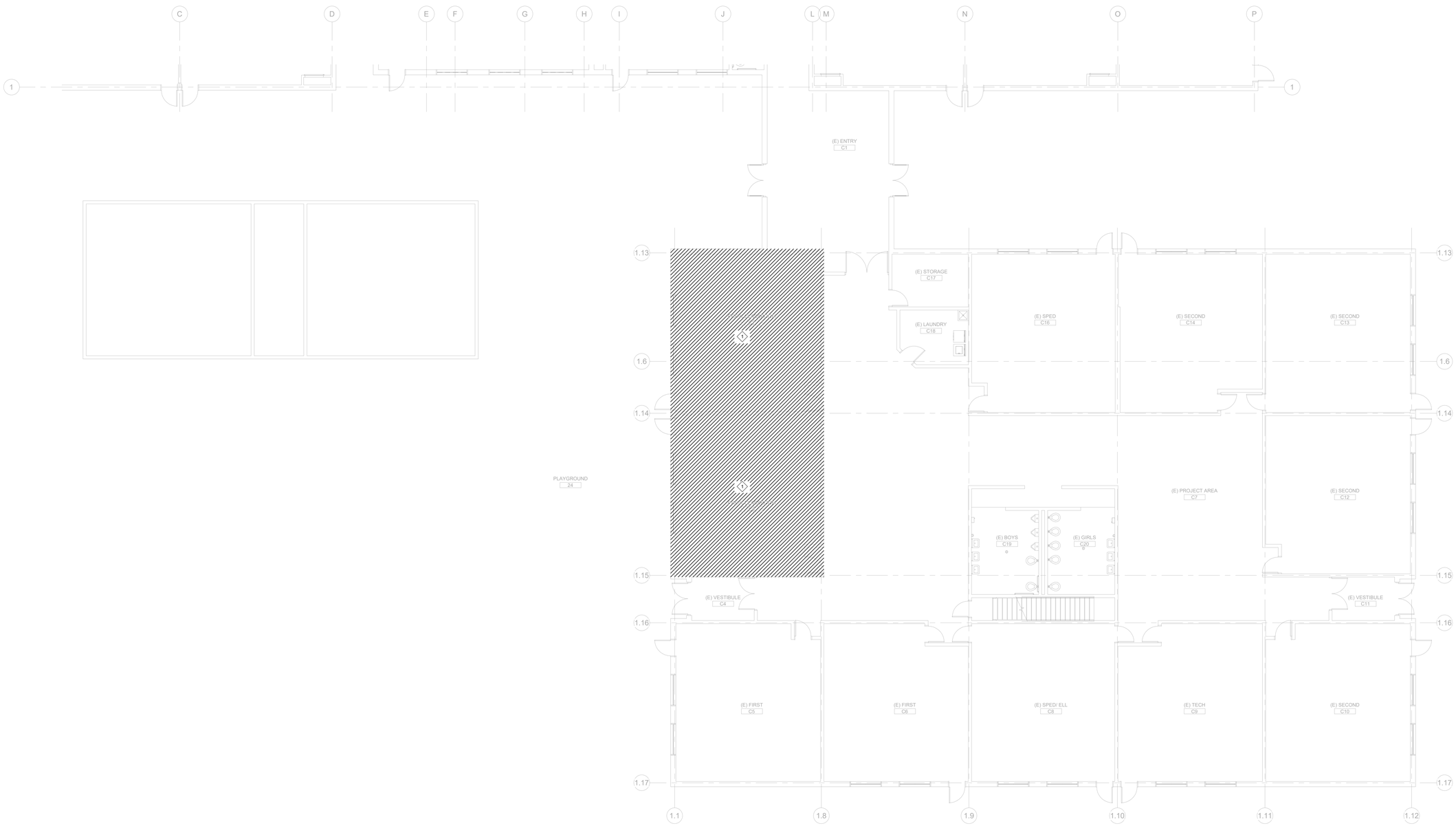


1 PRE-K PLAN AREA B DEMO TECHNOLOGY PLAN
SCALE: 1/8" = 1'-0"

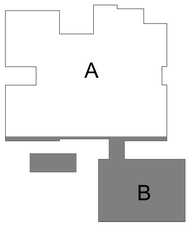


KEY PLAN


TAB Associates
*The Architectural Balance*
0056 Edwards Village Blvd.
Suite 210
Edwards, CO 81632
(970) 766-1470
fax: (970) 766-1471
email: tab@vail.net
www.tabassociates.com


Seal

COLORADO LICENSED
MARC A. SACCONI
42215
PROFESSIONAL ENGINEER
4-6-20

# STRAWBERRY PARK ELEMENTARY
# 39620 AMETHYST DRIVE
Steamboat Springs, CO

Revisions:

| No | Description | Date |
|---|---|---|
| | | |

Issue Dates:
PERMIT SET
04.06.2020

Sheet Title:
PRE-K PLAN AREA B DEMO TECH PLAN

Project No:
10182.00

Sheet No:
TD2.2


BG BUILDINGWORKS
systems fulfilled
303.278.3820 www.bgbuildingworks.com
Project No. 10182.00 Copyright 2020
ALBUQUERQUE | AVON | DENVER | FORT COLLINS

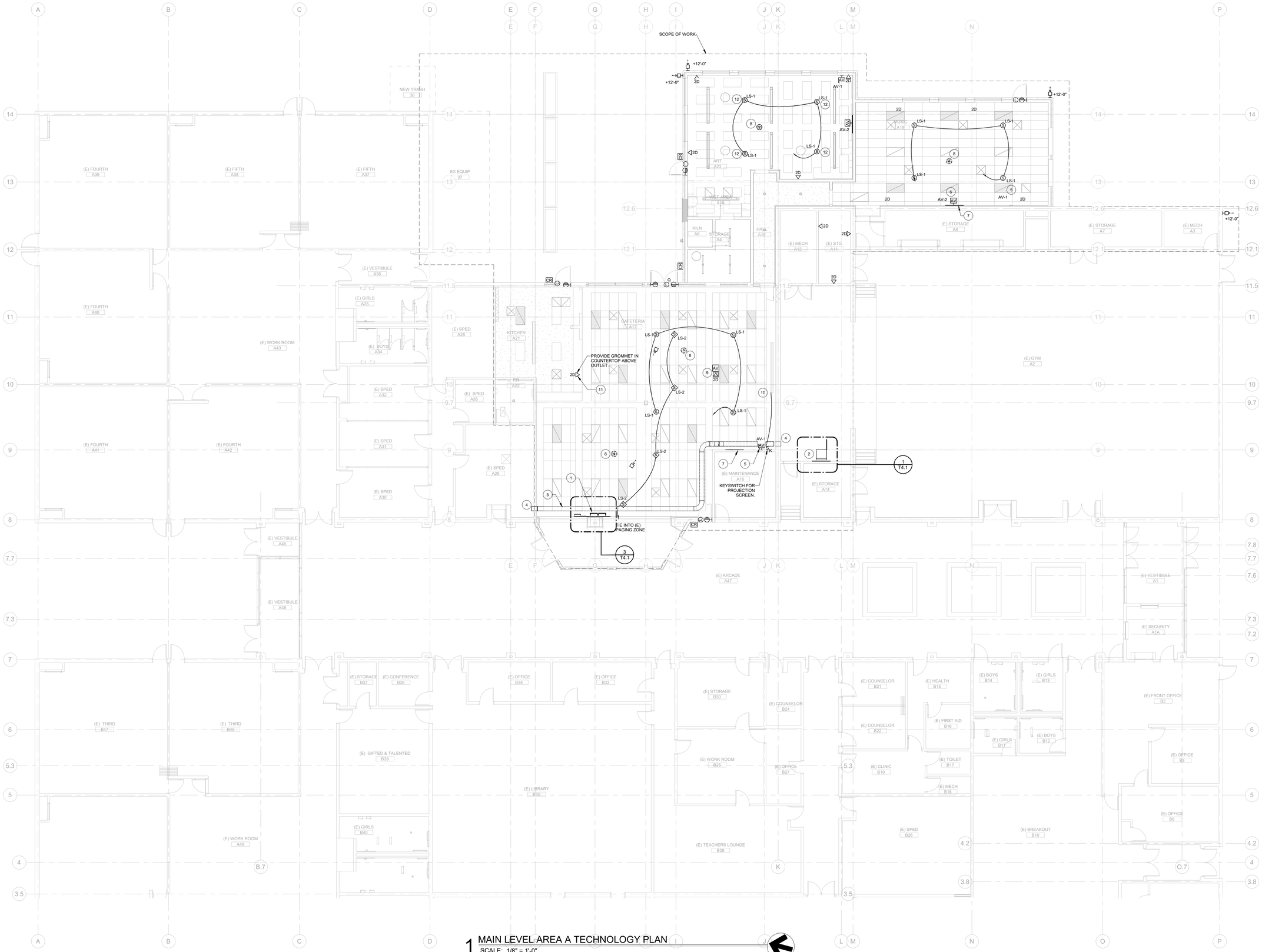


1 MAIN LEVEL AREA A TECHNOLOGY PLAN
SCALE: 1/8" = 1'-0"

## NOTES:

1. PROVIDE CONDUIT SLEEVES THROUGH WALLS TO FACILITATE CABLING. PROVIDE FIRESTOPPING AS REQUIRED.
2. ALL LOW VOLTAGE CONDUIT STUBBED OUT ABOVE FINISHED CEILINGS SHALL HAVE LONG RADIUS SWEEPS.
3. CABLE TIES SHALL BE RELEASABLE AND COMPOSED OF HOOK AND LOOP, RUBBER OR SOFT POLYMER. ZIP-TIES OR EQUAL SHALL NOT BE USED.
4. ACCESS CONTROL CABLING SHALL BE ROUTED VIA CONDUIT FROM OUTLET BOX TO ABOVE ACCESSIBLE CEILING.
5. COMMUNICATIONS CABLING SHALL BE ROUTED 'WILD' FROM OUTLET BOX TO ABOVE ACCESSIBLE CEILING.
6. HOMERUN CABLING TO SERVING DISTRIBUTION FRAME. USE J-HOOKS FOR PATHWAYS ABOVE ACCESSIBLE CEILING.
7. CABLING SHALL NOT RUN UNSUPPORTED FOR LENGTHS GREATER THAN 5'-0". ALL VOICE/DATA CABLING SHALL BE TERMINATED ON RACK MOUNTED PATCH PANELS.
8. ALL INFRASTRUCTURE SUPPORTING VOICE/DATA STRUCTURED CABLING SYSTEMS (RACKING, GROUNDING, PATHWAYS, ETC.) SHALL MEET BICSI STANDARDS.
9. CONTRACTOR TO PROVIDE BLOCKING AT PROJECTOR AND DISPLAY LOCATIONS TO SUPPORT 100LBS.
10. REFER TO T5.X AND T6.X SHEETS FOR SPECIFIC INFORMATION REGARDING SYSTEMS SHOWN ON FLOOR PLANS.

## # FLAG NOTES:

1 CONSOLIDATION POINT - PROVIDE TWO (2) 8U WALL MOUNT HINGED PANELS RACKS. INSTALL EXISTING HORIZONTAL PATCH PANELS AND FIBER OPTIC PATCH PANEL. PROVIDE 16"X16"X6" ENCLOSURE WITH TERMINAL BLOCK FOR EXTENDING ACCESS CONTROL CABLING. MOUNT (E) ANALOG 110-BLOCK HIGH ON WALL ADJACENT TO CABLE TRAY. EXTEND ALL CABLING TO NEW IDF LOCATION AT GYM STAGE.

2 WALL MOUNT EQUIPMENT CABINET - 40U. CHATSWORTH CUBE-IT OR EQUAL.

3 BASKET-STYLE CABLE TRAY - 12"W X 4"D.

4 12"W X 6"D RECTANGULAR SLEEVE THROUGH WALL. PROVIDE FIRESTOPPING AS REQUIRED.

5 AV INPUT PLATE. PROVIDE 2-GANG LOW VOLTAGE RING.

6 AV CABLING TERMINATION. PROVIDE LOW VOLTAGE RING IN WALL - FIELD COORDINATE MOUNTING HEIGHT W/ OWNER. PROVIDE J-HOOK ABOVE CEILING FOR CABLE SLACK.

7 PLYWOOD BACKBOARD FOR MOUNTING AUDIO ENHANCEMENT SYSTEM - 24"H X 48"W X 3/4"D. MOUNT BOTTOM AT 10'-0"

8 WIRELESS ACCESS POINT (WI-FI). PROVIDE 2-PORT BISCUIT JACK ABOVE CEILING. HOMERUN TWO (2) CAT5E TO SERVIING IDF. PROVIDE 10'-0" SLACK AT BISCUIT JACK.

9 PROJECTOR LOCATION. PROVIDE 2-PORT BISCUIT JACK WITH TWO (2) CAT5E HOMERUN TO SERVING IDF AND AV CONNECTIVITY TO AV INPUT WALLPLATE.

10 MOTORIZED PROJECTION SCREEN. 137" DIAGONAL 16:10 SCREEN. PROVIDE DA-LITE OR EQUAL. SUSPEND FROM STRUCTURE VIA THREADED ROD. MOUNT BOTTOM OF SCREEN LEVEL WITH CEILING.

11 FIELD VERIFY LOCATION WITH OWNER.

12 COORDINATE EXACT SPEAKER LOCATION WITH ACOUSTICAL PANELS.

TAB Associates
*The Architectural Balance*
0056 Edwards Village Blvd.
Suite 210
Edwards, CO 81632
(970) 766-1470
fax: (970) 766-1471
email: tab@vail.net
www.tabassociates.com

Seal
COLORADO LICENSED
MARC A. SACCONI
42215
PROFESSIONAL ENGINEER
4-6-20

# STRAWBERRY PARK ELEMENTARY
# 39620 AMETHYST DRIVE
## Steamboat Springs, CO

| Revisions: | | |
|---|---|---|
| No | Description | Date |
| | | |

Issue Dates:
PERMIT SET
04.06.2020

Sheet Title:
MAIN LEVEL AREA A TECH PLAN

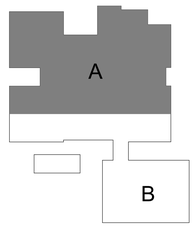


KEY PLAN

Project No:
10182.00

Sheet No:
T2.1

BG BUILDINGWORKS
systems fulfilled
303.278.3820 www.bgbuildingworks.com
Project No. 10182.00
Copyright 2020
ALBUQUERQUE | AVON | DENVER | FORT COLLINS

## NOTES:

1. PROVIDE CONDUIT SLEEVES THROUGH WALLS TO FACILITATE CABLING. PROVIDE FIRESTOPPING AS REQUIRED.
2. ALL LOW VOLTAGE CONDUIT STUBBED OUT ABOVE FINISHED CEILINGS SHALL HAVE LONG RADIUS SWEEPS.
3. CABLE TIES SHALL BE RELEASABLE AND COMPOSED OF HOOK AND LOOP. RUBBER OR SOFT POLYMER. ZIP-TIES OR EQUAL SHALL NOT BE USED.
4. ACCESS CONTROL CABLING SHALL BE ROUTED VIA CONDUIT FROM OUTLET BOX TO ABOVE ACCESSIBLE CEILING.
5. COMMUNICATIONS CABLING SHALL BE ROUTED 'WILD' FROM OUTLET BOX TO ABOVE ACCESSIBLE CEILING.
6. HOMERUN CABLING TO SERVING DISTRIBUTION FRAME. USE J-HOOKS FOR PATHWAYS ABOVE ACCESSIBLE CEILING.
7. CABLING SHALL NOT RUN UNSUPPORTED FOR LENGTHS GREATER THAN 5'-0". ALL VOICE/DATA CABLING SHALL BE TERMINATED ON RACK MOUNTED PATCH PANELS.
8. ALL INFRASTRUCTURE SUPPORTING VOICE/DATA STRUCTURED CABLING SYSTEMS (RACKING, GROUNDING, PATHWAYS, ETC.) SHALL MEET BICSI STANDARDS.
9. CONTRACTOR TO PROVIDE BLOCKING AT PROJECTOR AND DISPLAY LOCATIONS TO SUPPORT 100LBS.
10. REFER TO T5.X AND T6.X SHEETS FOR SPECIFIC INFORMATION REGARDING SYSTEMS SHOWN ON FLOOR PLANS.

## # FLAG NOTES:

1 AV CABLING TERMINATION. PROVIDE LOW VOLTAGE RING IN WALL - FIELD COORDINATE MOUNTING HEIGHT W/ OWNER. PROVIDE J-HOOK ABOVE CEILING FOR CABLE SLACK.

2 AV INPUT PLATE. PROVIDE 2-GANG LOW VOLTAGE RING.

3 PLYWOOD BACKBOARD - 24"H X 48"W X 3/4"D. MOUNT BOTTOM AT 10'-0"

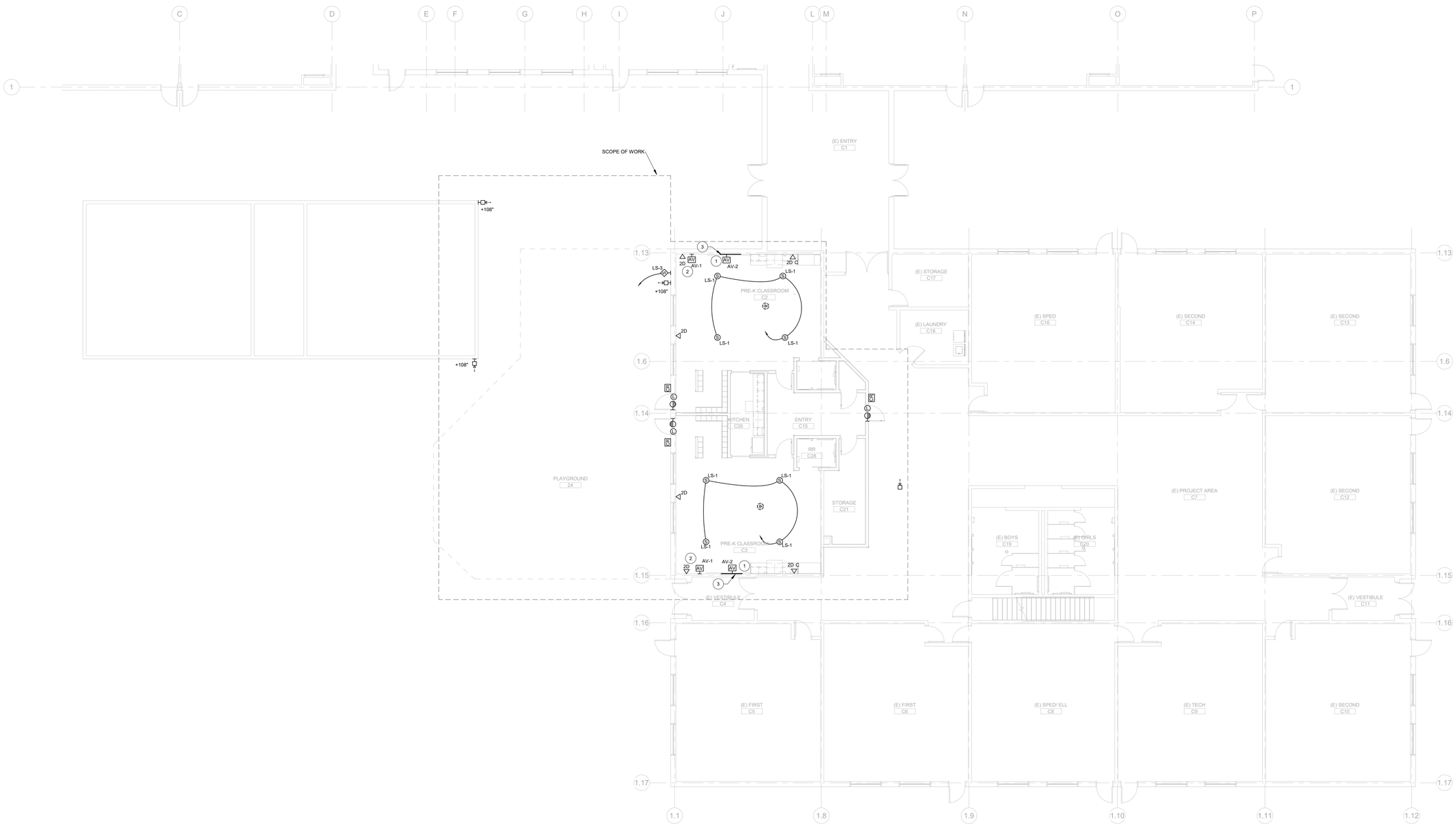


1 PRE-K PLAN AREA B TECHNOLOGY PLAN
SCALE: 1/8" = 1'-0"

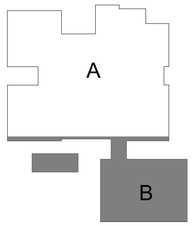


KEY PLAN


TAB Associates
*The Architectural Balance*
0056 Edwards Village Blvd.
Suite 210
Edwards, CO 81632
(970) 766-1470
fax: (970) 766-1471
email: tab@vail.net
www.tabassociates.com


Seal

COLORADO LICENSED
MARC A. SACCONI
42215
PROFESSIONAL ENGINEER
4-6-20

# STRAWBERRY PARK ELEMENTARY
# 39620 AMETHYST DRIVE
## Steamboat Springs, CO

Revisions:

| No | Description | Date |
|---|---|---|
| | | |

Issue Dates:
PERMIT SET
04.06.2020

Sheet Title:
PRE-K PLAN AREA B TECH PLAN

Project No:
10182.00

Sheet No:
T2.2


BG BUILDINGWORKS
systems fulfilled
303.278.3820 www.bgbuildingworks.com
Project No. 10182.00

Copyright 2020
ALBUQUERQUE | AVON | DENVER | FORT COLLINS

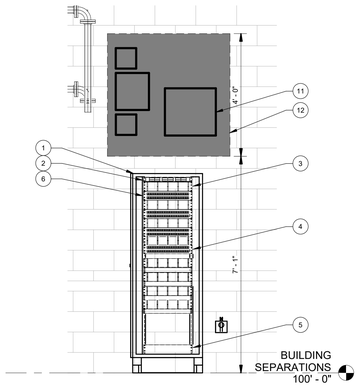


2 TECHNOLOGY ENLARGED PLAN - EQUIPMENT RACK ELEVATION
SCALE: 1/2" = 1'-0"

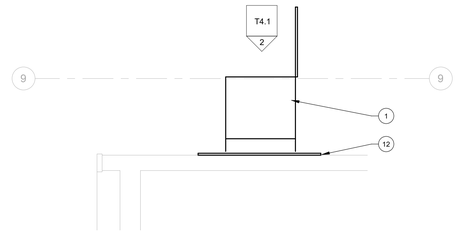


1 TECHNOLOGY ENLARGED PLAN - IDF RACK
SCALE: 1/2" = 1'-0"

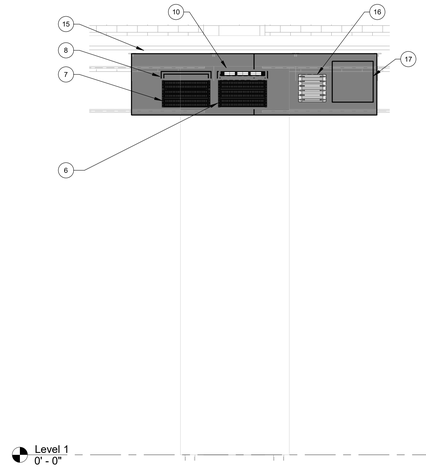


4 TECHNOLOGY ENLARGED PLAN - CONSOLIDATION POINT ELEVATION
SCALE: 1/2" = 1'-0"

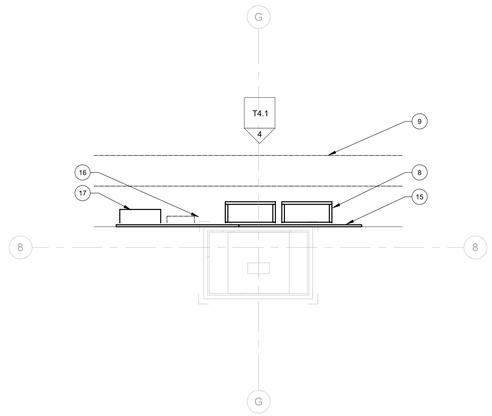


3 TECHNOLOGY ENLARGED PLAN - CONSOLIDATION POINT
SCALE: 1/2" = 1'-0"

## # FLAG NOTES:

1 WALL MOUNT EQUIPMENT CABINET - 40U. CHATSWORTH CUBE-IT PLUS OR EQUAL.

2 FIBER OPTIC PATCH TRAY - 1U. PROVIDE PASS THROUGH 'LC' - TYPE CONNECTORS.

3 (E) 2U HORIZONTAL CABLE MANAGER. TYPICAL OF 5.

4 (E) NETWORK SWITCH - OWNER PROVIDED.

5 (E) UPS BATTERY BACKUP - OWNER PROVIDED.

6 (E) 48-PORT CAT5E PATCH PANEL. TYPICAL OF 3.

7 NEW 48-PORT CAT5E RJ45 PATCH PANEL, TYPICAL.

8 WALL MOUNT HINGED PANEL RACK - 8U. PROVIDE MIDDLE ATLANTIC 'HPM-8-915' OR EQUAL. TYPICAL OF 2.

9 BASKET-STYLE CABLE TRAY - 12"W X 4"D.

10 (E) FIBER OPTIC PATCH TRAY - 1U.

11 ACCESS CONTROL COMPONENTS RELOCATED FROM DEMOLISHED IDF. RELOCATE (2) PSU'S AND CONTROL INTERFACE ENCLOSURE. EXTEND WIRING FROM CONSOLIDATION POINT.

12 PLYWOOD BACKBOARD - 4' X4' X 3/4".

15 PLYWOOD BACKBOARD - 3/4". PROVIDE 2'-0" H X 10'-0" W SECTION. MOUNT TOP TO BOTTOM OF STRUCTURE.

16 (E) 110-PUNCHBLOCK RELOCATED FROM DEMO'D IDF.

17 ACCESS CONTROL WIRING SPLICE LOCATION. PROVIDE WALL MOUNT ENCLOSURE W/ HINGED COVER - 16"H X 16"W X 6"D.


TAB Associates
*The Architectural Balance*
0056 Edwards Village Blvd.
Suite 210
Edwards, CO 81632
(970) 766-1470
fax: (970) 766-1471
email: tab@vail.net
www.tabassociates.com


Seal
COLORADO LICENSED
MARC A. SACCONI
42215
PROFESSIONAL ENGINEER
4-6-20

# STRAWBERRY PARK ELEMENTARY
# 39620 AMETHYST DRIVE
Steamboat Springs, CO

Revisions:

| No | Description | Date |
|---|---|---|
| | | |

Issue Dates:
PERMIT SET
04.06.2020

Sheet Title:
TECHNOLOGY ENLARGED PLANS

Project No:
10182.00

Sheet No:
T4.1


BG BUILDINGWORKS
systems fulfilled
303.278.3820 www.bgbuildingworks.com
Project No. 10182.00

Copyright 2020
ALBUQUERQUE | AVON | DENVER | FORT COLLINS

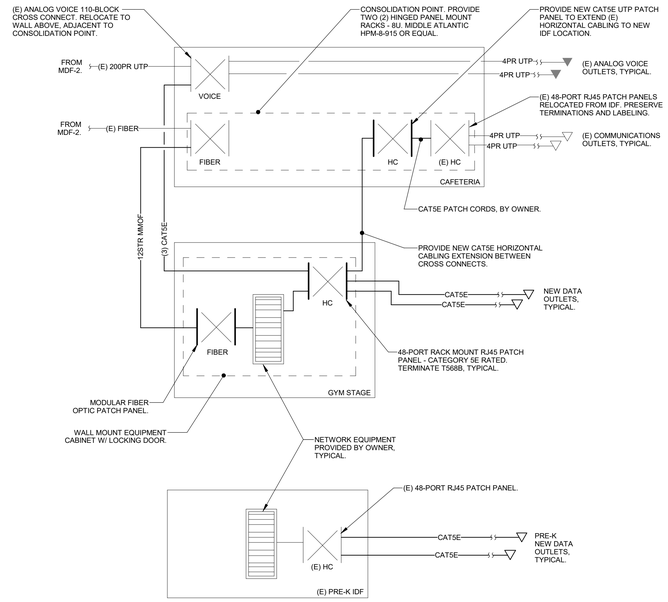


1 COMMUNICATIONS RISER DIAGRAM
SCALE: NONE

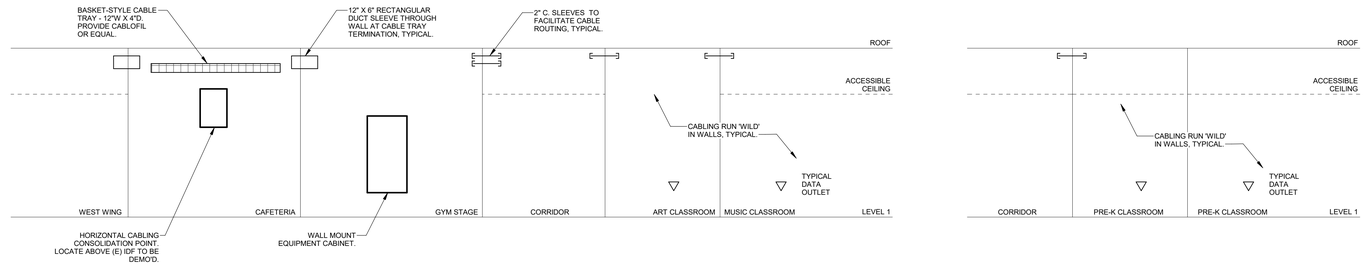


2 COMMUNICATIONS PATHWAYS AND SPACES
SCALE: NONE

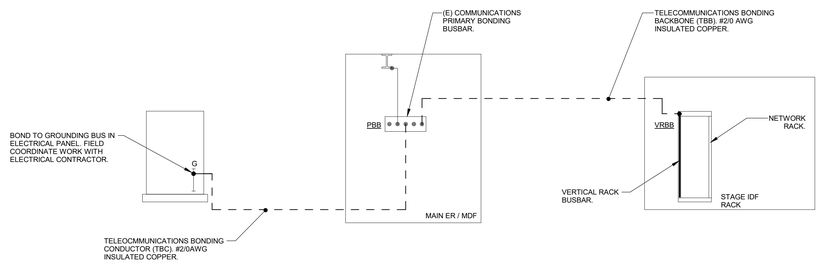


3 TELECOMMUNICATIONS BONDING DIAGRAM
SCALE: NONE

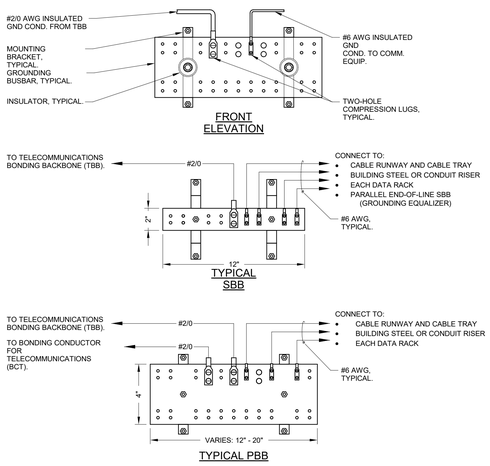


GROUNDING NOTES:

1. ALL GROUND CONNECTIONS SHALL BE MADE WITH HEAVY DUTY 2-HOLE COMPRESSION LUGS WITH STAINLESS STEEL SCREWS AND LOCKING NUTS, TWO SCREWS & NUTS PER LUG.
2. PROVIDE GROUNDING BUSBARS IN ALL COMMUNICATION CLOSETS. BOND MAIN BUSBAR (PBB) TO BUILDING MAIN ELECTRICAL SERVICE GROUND WITH #2/0 AWG INSULATED STRANDED COPPER CONDUCTOR AND #2/0 BETWEEN BUS BARS. GROUNDING TO BUILDING STRUCTURE, CONDUITS, UTILITY PIPING, OR ELECTRICAL SUB-PANELS IN LIEU OF GROUNDING TO BUILDING MAIN ELECTRICAL SERVICE GROUND IS NOT ACCEPTABLE.
3. BONDING CONDUCTOR BETWEEN PBB AND END BUSBAR SHALL BE CONTINUOUS. PROVIDE C-TYPE COMPRESSION TAPS TO FEED INTERMEDIATE BUSBARS.
4. BOND EACH CONDUIT IN COMMUNICATIONS ROOMS WITH #6 AWG INSULATED STRANDED COPPER GROUNDING CONDUCTOR TO GROUND BUSBAR. ROUTE CONDUCTOR IN CABLE RUNWAY TO GROUNDING BUSBAR.
5. BOND CABLE TRAY AND RUNWAY WITH #6 AWG INSULATED STRANDED COPPER GROUNDING CONDUCTOR TO GROUNDING BUSBAR.

4 TELECOMMUNICATIONS BONDING BUSBAR DIAGRAM
SCALE: NONE


TAB Associates
*The Architectural Balance*
0056 Edwards Village Blvd.
Suite 210
Edwards, CO 81632
(970) 766-1470
fax: (970) 766-1471
email: tab@vail.net
www.tabassociates.com


Seal

COLORADO LICENSED
MARC A. SACCONI
42215
PROFESSIONAL ENGINEER
4-6-20

# STRAWBERRY PARK ELEMENTARY
## 39620 AMETHYST DRIVE
Steamboat Springs, CO

Revisions:

| No | Description | Date |
|---|---|---|
| | | |

Issue Dates:
PERMIT SET
04.06.2020

Sheet Title:
TECHNOLOGY RISER DIAGRAMS

Project No:
10182.00

Sheet No:
T5.1


BG BUILDINGWORKS
systems fulfilled
303.278.3820 www.bgbuildingworks.com
Project No. 10182.00 Copyright 2020
ALBUQUERQUE | AVON | DENVER | FORT COLLINS

## NOTE

1. PROVIDE (2) CAT5E TO EACH CAMERA LOCATION.

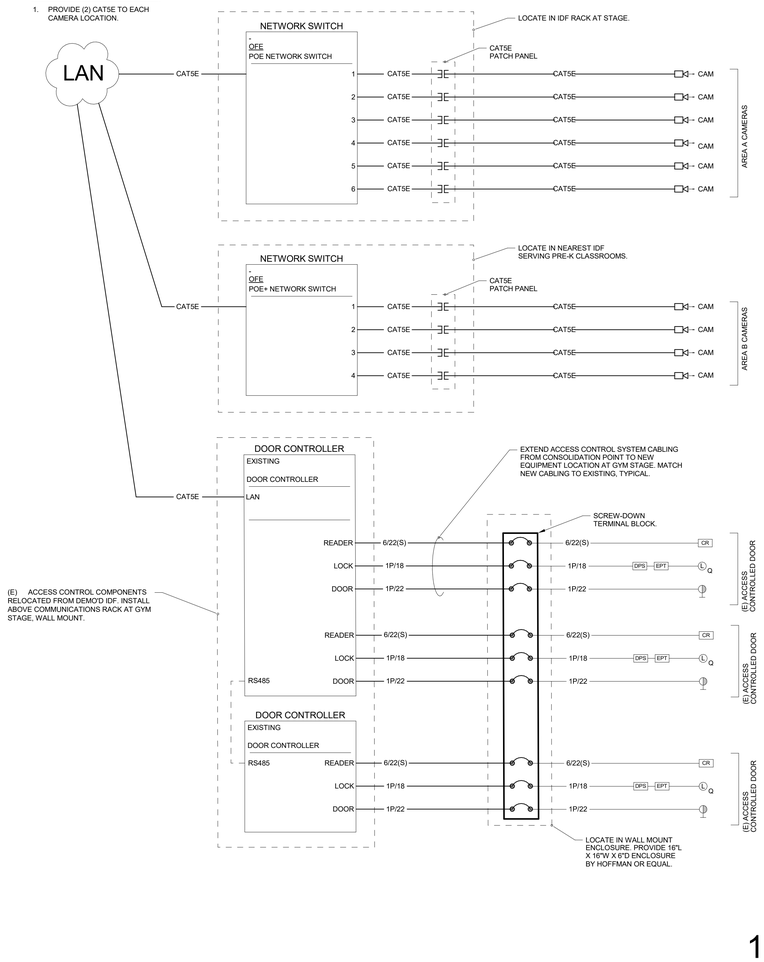


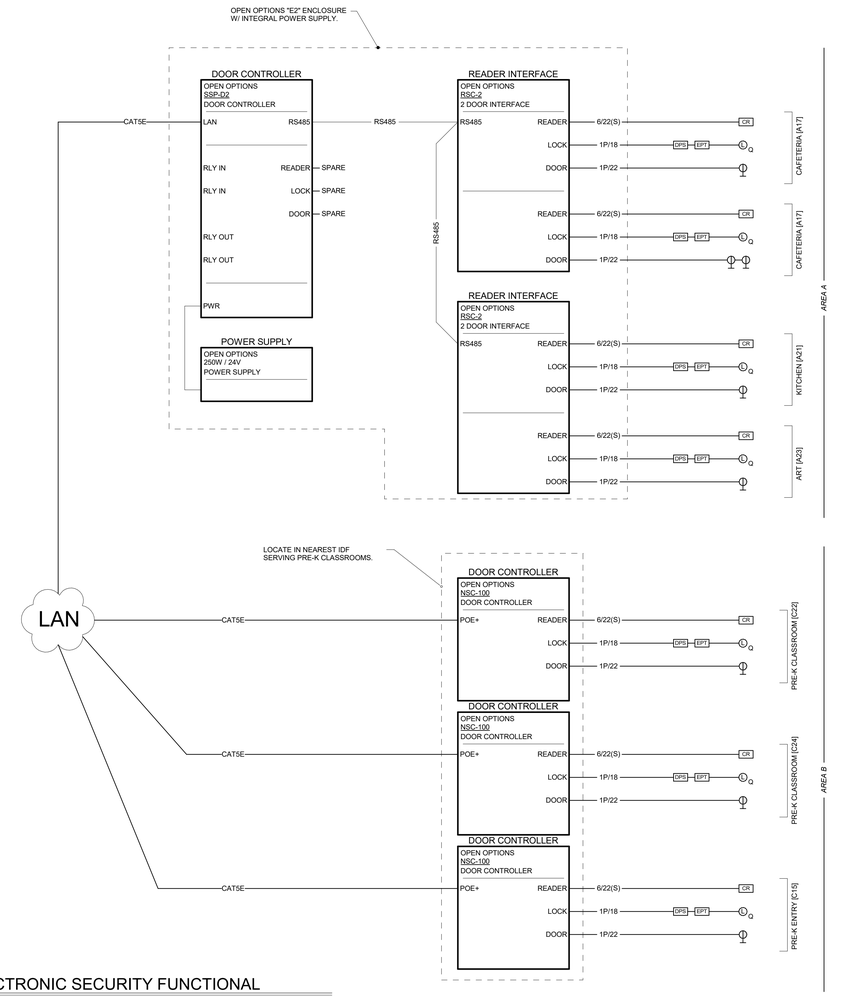


1 ELECTRONIC SECURITY FUNCTIONAL
SCALE: NONE

## NOTES:

1. LIGHT LINEWEIGHT INDICATES EXISTING OR OWNER PROVIDED EQUIPMENT.
2. FIELD-COORDINATE EXACT LOCATION OF ALL PANELS AND HARDWARE WITH OWNER.
3. PROVIDE ALL NECESSARY ACCESSORIES AND APPURTENANCES TO COMPRISE A COMPLETE AND OPERABLE SYSTEM.
4. INCREASE WIRE GAUGE FOR LOCK CIRCUITS LONGER THAN 300 FEET.
5. REFERENCE PROJECT MANUAL / SPECIFICATION FOR CABLING REQUIREMENTS.

## LINETYPE LEGEND:

| | |
|---|---|
| 6/22(S) | SECURITY - CARD READER |
| 1P/18 | SECURITY - ELECTRIC DOOR HARDWARE |
| 1P/22 | SECURITY - DOOR CONTACT |
| RS485 | CONTROL (SERIAL) |
| CAT5E | CATEGORY 6 - 4PR UTP |

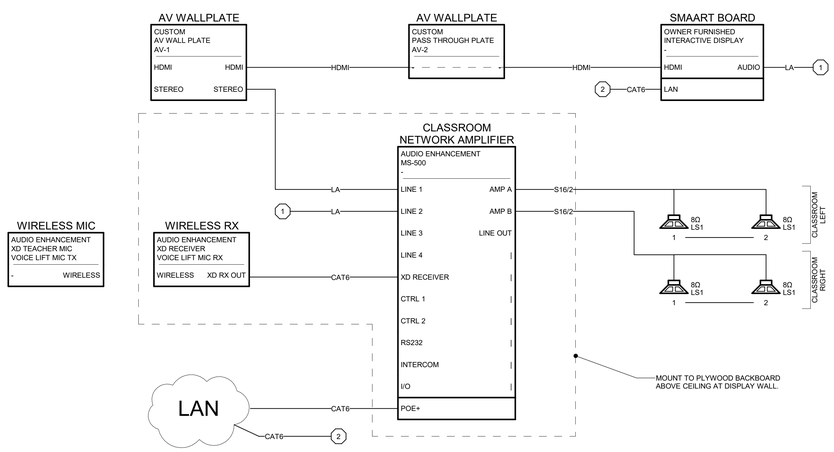


4 TYPICAL CLASSROOM AV FUNCTIONAL DIAGRAM
SCALE: NONE

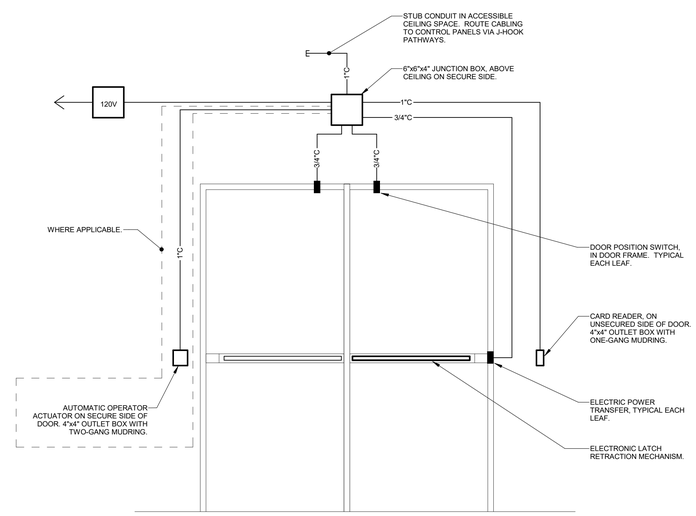


3 ACCESS CONTROL DOOR DIAGRAM - DOUBLE LEAF
SCALE: NONE

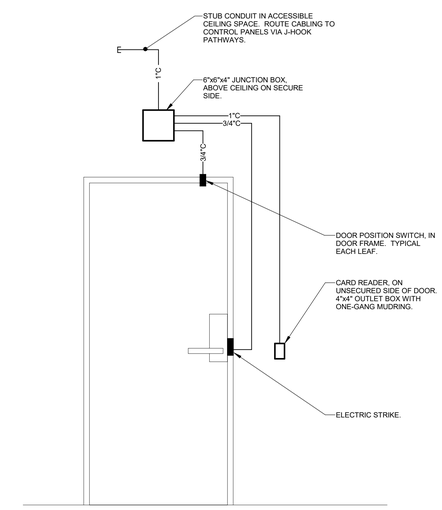


2 ACCESS CONTROL DOOR DIAGRAM - SINGLE LEAF
SCALE: NONE


TAB Associates
*The Architectural Balance*
0056 Edwards Village Blvd.
Suite 210
Edwards, CO 81632
(970) 766-1470
fax: (970) 766-1471
email: tab@vail.net
www.tabassociates.com


Seal

COLORADO LICENSED
MARC A. SACCONI
42215
PROFESSIONAL ENGINEER
4-6-20

# STRAWBERRY PARK ELEMENTARY
# 39620 AMETHYST DRIVE
## Steamboat Springs, CO

| Revisions: | | |
|---|---|---|
| No | Description | Date |
| | | |

Issue Dates:
PERMIT SET
04.06.2020

Sheet Title:
TECHNOLOGY FUNCTIONAL DIAGRAMS

Project No:
10182.00

Sheet No:
T5.2


BG BUILDINGWORKS
systems fulfilled
303.278.3820 www.bgbuildingworks.com
Project No. 10182.00

Copyright 2020

ALBUQUERQUE | AVON | DENVER | FORT COLLINS

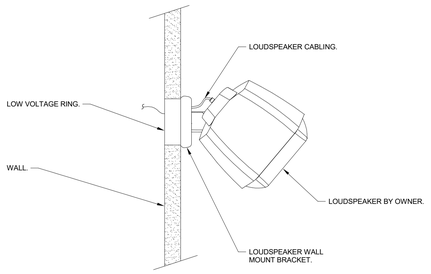


## SURFACE MOUNT LOUDSPEAKER MOUNTING DIAGRAM

NO SCALE — PLAN SYMBOL: S

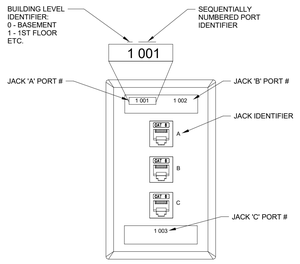


NOTES:
1. ALL LABELS SHALL BE MACHINE PRINTED.
2. LABELING CONVENTION APPLIES TO BOTH FACEPLATE AND CABLING.
3. PROVIDE COLOR CODED JACK FOR INTENDED USE.

## TYPICAL OUTLET & CABLING LABELING CONVENTION

NO SCALE — M

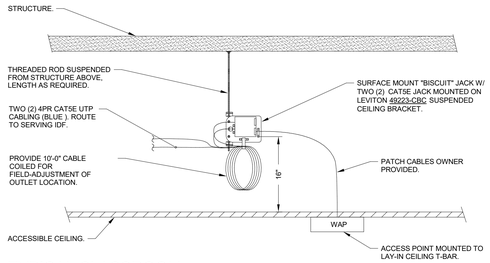


## TYPICAL CLASSROOM WIRELESS ACCESS POINT OUTLET DIAGRAM

NO SCALE — PLAN SYMBOL: F

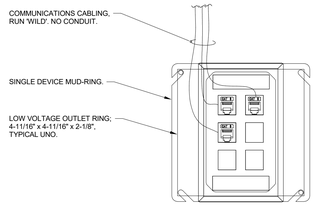


## COMMUNICATIONS OUTLET BOX DIAGRAM

NO SCALE — A

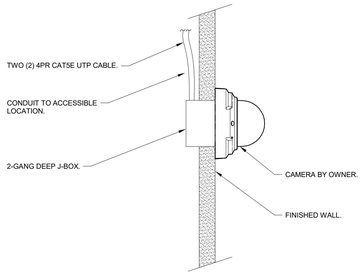


## WALL MOUNT CAMERA DIAGRAM

NO SCALE — PLAN SYMBOL: T

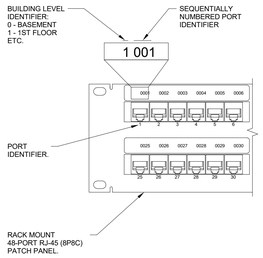


NOTES:
1. ALL LABELS SHALL BE MACHINE PRINTED.
2. LABELING CONVENTION APPLIES TO BOTH PATCH PANEL AND HORIZONTAL CABLING.
3. MULTIPLE PATCHPANELS CONTINUE SEQUENTIALLY NUMBERED PORT IDENTIFIER, I.E. PORT 1 ON SECOND PATCHPANEL WILL BE IDENTIFIED AS '0049', ETC.

## TYPICAL PATCH PANEL LABELING CONVENTION

NO SCALE — N

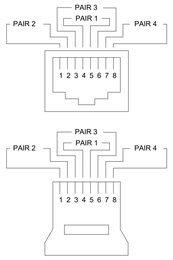


| MODULAR CONNECTOR PINOUTS | | |
|---|---|---|
| PAIR | PIN | COLOR CODE |
| 1 | 4 | BLUE |
| 1 | 5 | WHITE/BLUE |
| 2 | 1 | WHITE/ORANGE |
| 2 | 2 | ORANGE |
| 3 | 3 | WHITE/GREEN |
| 3 | 6 | GREEN |
| 4 | 7 | WHITE/BROWN |
| 4 | 8 | BROWN |

## T568B STANDARD 8-POSITION / 8-CONDUCTOR DEVICE WIRING DIAGRAM

NO SCALE — G

NOTES:
1. PROVIDE LEVEL 1 ADMINISTRATION PER ANSI/TIA/EIA-606.
2. PROVIDE LABEL ON FRONT OF FACEPLATE.

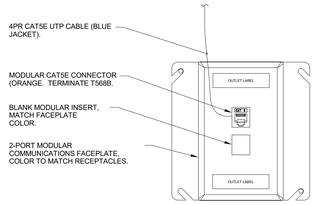


## DATA OUTLET DIAGRAM

NO SCALE — PLAN SYMBOL: 1D — B

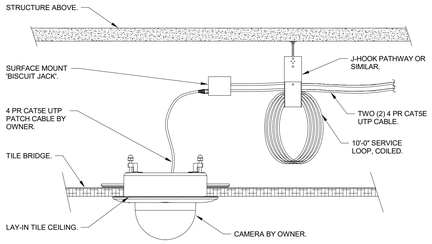


## FLUSH CEILING MOUNT CAMERA DIAGRAM

NO SCALE — PLAN SYMBOL: U

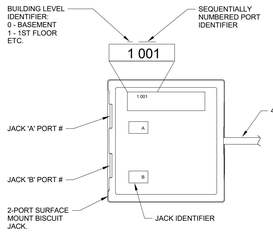


NOTES:
1. ALL LABELS SHALL BE MACHINE PRINTED.
2. LABELING CONVENTION APPLIES TO BOTH FACEPLATE AND CABLING.
3. PROVIDE COLOR CODED JACK FOR INTENDED USE.

## TYPICAL BISCUIT JACK LABELING CONVENTION

NO SCALE — P

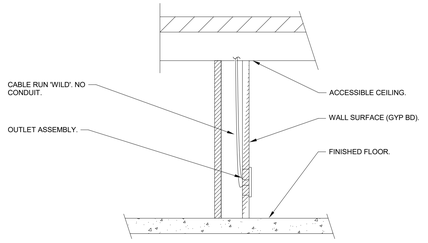


## OUTLET PATHWAY DIAGRAM - DRYWALL PARTITION

NO SCALE — H

NOTES:
1. PROVIDE LEVEL 1 ADMINISTRATION PER ANSI/TIA/EIA-606.
2. PROVIDE LABEL ON FRONT OF FACEPLATE.

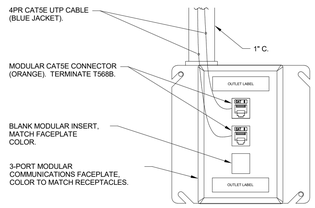


## VOICE/DATA OUTLET DIAGRAM

NO SCALE — PLAN SYMBOL: 2D — C

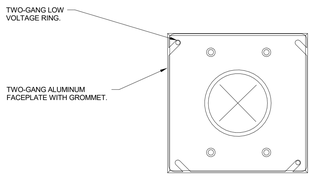


NOTES:
1. ALL AV CABLING RUN 'WILD'.

## AV OUTLET WALL PLATE DIAGRAM

NO SCALE — PLAN SYMBOL: AV AV-2 — V

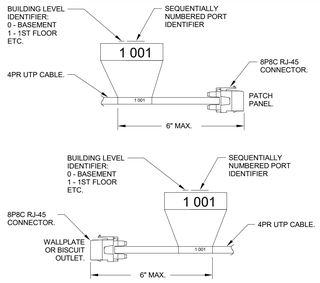


NOTES:
1. ALL LABELS SHALL BE MACHINE PRINTED AND SHALL WRAP COMPLETELY AROUND CABLE.
2. LABELING SHALL BE PAPER WITH THERMOPLASTIC WRAP.

## HORIZONTAL CABLE LABELING CONVENTION

NO SCALE — Q

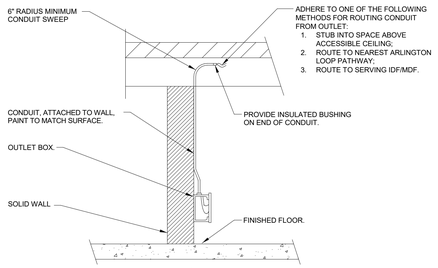


## OUTLET PATHWAY DIAGRAM SOLID PARTITION (SURFACE MOUNT)

NO SCALE — J

NOTES:
1. PROVIDE LEVEL 1 ADMINISTRATION PER ANSI/TIA/EIA-606.
2. PROVIDE LABEL ON FRONT OF FACEPLATE.

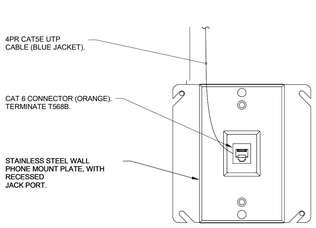


## WALL PHONE OUTLET DIAGRAM

NO SCALE — PLAN SYMBOL: W — D

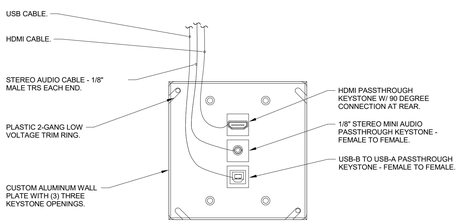


## AV WALL PLATE DIAGRAM

NO SCALE — PLAN SYMBOL: AV AV-1 — W

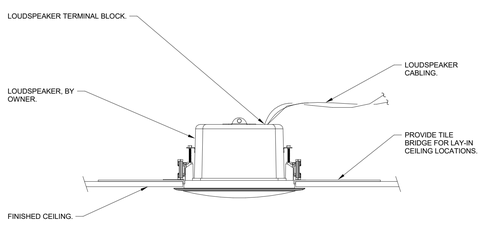


## CEILING SPEAKER MOUNTING DIAGRAM

NO SCALE — PLAN SYMBOL: S — R

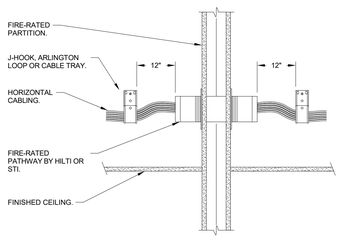


## FIRE-RATED PATHWAY DIAGRAM

NO SCALE — K

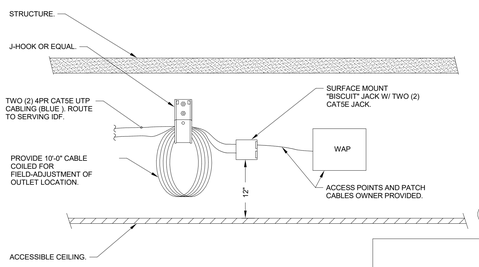


## WIRELESS ACCESS POINT OUTLET DIAGRAM

NO SCALE — PLAN SYMBOL: E


BG BUILDINGWORKS
systems fulfilled
303.278.3820 www.bgbuildingworks.com
Project No. 10182.00

Copyright 2020

ALBUQUERQUE | AVON | DENVER | FORT COLLINS

TAB Associates
The Architectural Balance
0056 Edwards Village Blvd.
Suite 210
Edwards, CO 81632
(970) 766-1470
fax: (970) 766-1471
email: tab@vail.net
www.tabassociates.com


Seal

COLORADO LICENSED
MARC A. SACCONI
42215
PROFESSIONAL ENGINEER
4-6-20

# STRAWBERRY PARK ELEMENTARY
# 39620 AMETHYST DRIVE
## Steamboat Springs, CO

Revisions:

| No | Description | Date |
|---|---|---|
| | | |

Issue Dates:
PERMIT SET
04.06.2020

Sheet Title:
TECHNOLOGY DIAGRAMS

Project No:
10182.00

Sheet No:
T6.0

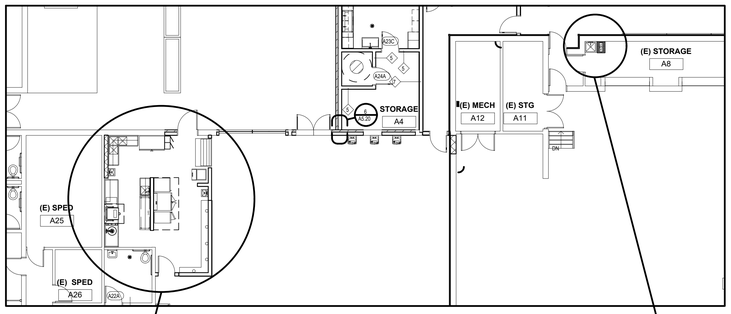


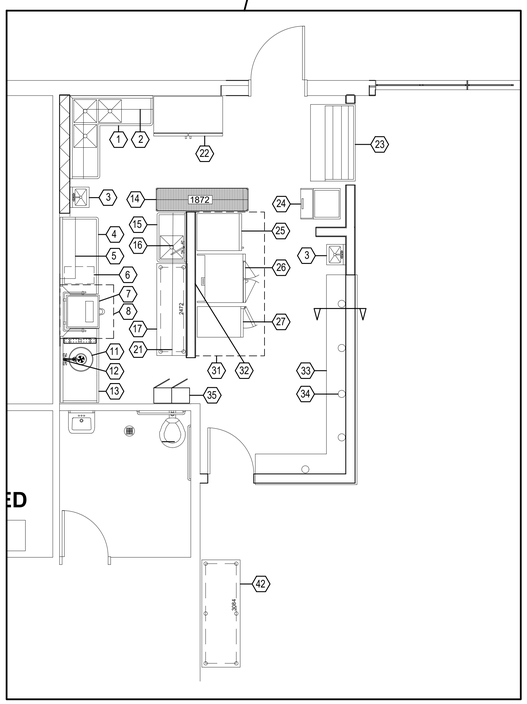


KITCHEN EQUIPMENT PLAN

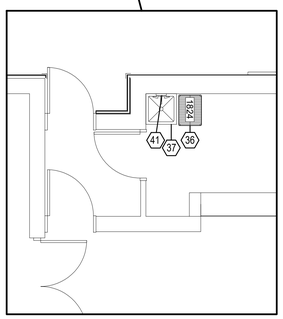


MOP SINK ROOM

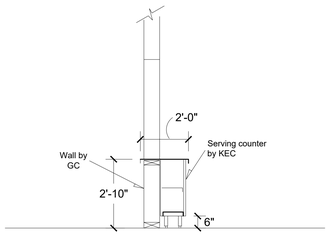


SERVING LINE
SECTION

## EQUIPMENT SCHEDULE

| ITEM # | QTY. | DESCRIPTION | NOTES | PROVIDED BY |
|---|---|---|---|---|
| 1 | 1 | SINK, 3 COMPARTMENT, CORNER | OVERFLOWS AND LEVER DRAINS | KEC |
| 2 | 2 | WALL SHELVES | STAINLESS STEEL | KEC |
| 3 | 2 | HAND SINK W/ SPLASH GUARDS | | KEC |
| 4 | 1 | DISH TABLE, CLEAN | | KEC |
| 5 | 2 | WALL SHELVES | STAINLESS STEEL | KEC |
| 6 | 1 | BOOSTER HEATER | | KEC |
| 7 | NIC | DISH MACHINE | | EXISTING |
| 8 | 1 | CONDENSATE HOOD | | KEC |
| 9 | NIC | SPARE NUMBER | | |
| 10 | NIC | SPARE NUMBER | | |
| 11 | 1 | DISPOSAL, 2 HP | | KEC |
| 12 | 1 | PRE RINSE SPRAYER | STAINLESS STEEL | KEC |
| 13 | 1 | DISH TABLE, SOILED | UNDER SHELF | KEC |
| 14 | 1 | CLEAN UTENSIL STORAGE | METROMAX I | KEC |
| 15 | 1 | SINK, VEG PREP | OVERFLOWS AND LEVER DRAINS | KEC |
| 16 | 2 | WALL SHELVES | STAINLESS STEEL | KEC |
| 17 | 1 | WORK TABLE | | KEC |
| 18 | NIC | SPARE NUMBER | | |
| 19 | NIC | SPARE NUMBER | | |
| 20 | NIC | SPARE NUMBER | | |
| 21 | 2 | WALL SHELVES | STAINLESS STEEL | KEC |
| 22 | 1 | REFRIGERATOR, 2 DOOR | CASTERS | KEC |
| 23 | 1 | MERCHANDISER, OPEN AIR | NIGHT COVER | KEC |
| 24 | 1 | ICE MACHINE AND BIN | 300 LBS / 24 HOURS | KEC |
| 25 | NIC | CABINET, HEATED | | EXISTING |
| 26 | 1 | CONVECTION OVEN, DOUBLE STACKED | CASTERS | KEC |
| 27 | 1 | STEAMER, 10 PAN | | KEC |
| 28 | NIC | SPARE NUMBER | | |
| 29 | NIC | SPARE NUMBER | | |
| 30 | NIC | SPARE NUMBER | | |
| 31 | 1 | EXHAUST HOOD, TYPE 2 | | KEC |
| 32 | 1LOT | WALL FLASHING BELOW HOOD | STAINLESS STEEL | KEC |
| 33 | 1 | SERVING LINE AND BASE | STAINLESS STEEL TOP AND BASE | KEC |
| 34 | 5 | HEAT LAMPS | | KEC |
| 35 | NIC | EMPLOYEE LOCKERS | | GC |
| 36 | 1 | CLEANING SUPPLY STORAGE | METRO MAX I | KEC |
| 37 | NIC | MOP SINK | | GC |
| 38 | NIC | SPARE NUMBER | | |
| 39 | NIC | SPARE NUMBER | | |
| 40 | NIC | SPARE NUMBER | | |
| 41 | NIC | HOSE BIB FOR CHEM DISPENSER | | GC |
| 42 | 1 | TRAY RETURN TABLE | | GC |
| END | OF | ITEMS | | |

LEGEND:
KEC = Kitchen Equipment Contractor NIC = Not In kitchen Contract GC = General Contractor

NOTE: KEC / GC shall disconnect, remove and store all equipment that will be reused in the new kitchen. Eequipment shall be store in an environmentally controlled area and protected from freezing.


TAB Associates
*The Architectural Balance*
0056 Edwards Village Blvd.
Suite 210
Edwards, CO 81632
(970) 766-1470
fax: (970) 766-1471
email: tab@vail.net
www.tabassociates.com

Civil Engineer
Alpine Engineering, Inc.
970-926-3373
Structural Engineer
JH Structural Engineers
303-318-6539
Mechanical Engineer
BG BuildingWorks, Inc.
970-949-6108
Electrical Engineer
BG BuildingWorks, Inc.
970-949-6108


Seal

# Strawberry Park Elementary
# 39620 Amethyst Drive
## Steamboat Springs, CO

Revisions:

| No | Description | Date |
|---|---|---|
| | | |

Issue Dates:
CD - 04/06/20

Sheet Title:
**Kitchen Equipment Plan**

Project No:
1935.02

Sheet No:
FS201


KITCHEN TECH
Foodservice Design and Consulting
356 Monte Vista Street, Brighton, Colorado, 80601
Phone: 303-835-2018 brian@kitchentech.biz

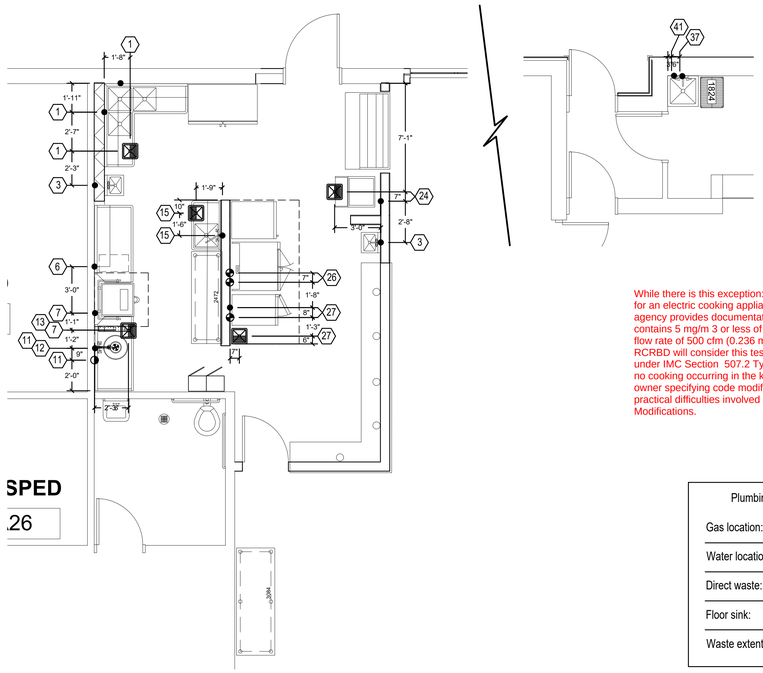





While there is this exception: A Type I hood shall not be required for an electric cooking appliance where an approved testing agency provides documentation that the appliance effluent contains 5 mg/m 3 or less of grease when tested at an exhaust flow rate of 500 cfm (0.236 m 3/s) in accordance with UL 710B. RCRBD will consider this testing as part of a deferred submittal under IMC Section 507.2 Type I hoods, however the request for no cooking occurring in the kitchen requires a submittal by the owner specifying code modifications required where there are practical difficulties involved as applicable per IMC Section 105.1 Modifications.

| Plumbing Legend | |
|---|---|
| Gas location: | |
| Water location: | |
| Direct waste: | |
| Floor sink: | |
| Waste extention: | |

## EQUIPMENT PLUMBING SCHEDULE

| ITEM # | QTY. | DESCRIPTION | AFF | HOT WATER | COLD WATER | INDIRECT WASTE | DIRECT WASTE | FLOOR SINK | GAS | BTU | NOTES |
|---|---|---|---|---|---|---|---|---|---|---|---|
| 1 | 1 | SINK, 3 COMPARTMENT, CORNER | 15 | 1/2 | 1/2 | 2 | | 3 | | | EXTEND INDIRECT DRAIN TO FLOOR SINK |
| 2 | 2 | WALL SHELVES | - | | | | | | | | |
| 3 | 2 | HAND SINK W/ SPLASH GUARDS | STND | 1/2 | 1/2 | | 2 | | | | |
| 4 | 1 | DISH TABLE, CLEAN | - | | | | | | | | |
| 5 | 2 | WALL SHELVES | - | | | | | | | | |
| 6 | 1 | BOOSTER HEATER | 12 | 3/4 | | | | | | | EXTEND BOOSTER OUTPUT TO DISH MACHINE |
| 7 | NIC | DISH MACHINE | OOF | | | 2 | | 3 | | | EXTEND INDIRECT DRAIN TO FLOOR SINK |
| 8 | 1 | CONDENSATE HOOD | - | | | | | | | | |
| 9 | NIC | SPARE NUMBER | - | | | | | | | | |
| 10 | NIC | SPARE NUMBER | - | | | | | | | | |
| 11 | 1 | DISPOSAL, 2 HP | 12 | | | | 2 | | | | TAP WATER SUPPLY FROM ITEM #12 |
| 12 | 1 | PRE RINSE SPRAYER | 15 | 1/2 | 1/2 | | | | | | |
| 13 | 1 | DISH TABLE, SOILED | OOF | | | 2 | | 3 | | | EXTEND INDIRECT DRAIN TO FLOOR SINK |
| 14 | 1 | CLEAN UTENSIL STORAGE | - | | | | | | | | |
| 15 | 1 | SINK, VEG PREP | 15 | 1/2 | 1/2 | 2 | | 3 | | | EXTEND INDIRECT DRAIN TO FLOOR SINK |
| 16 | 2 | WALL SHELVES | - | | | | | | | | |
| 17 | 1 | WORK TABLE | - | | | | | | | | |
| 18 | NIC | SPARE NUMBER | - | | | | | | | | |
| 19 | NIC | SPARE NUMBER | - | | | | | | | | |
| 20 | NIC | SPARE NUMBER | - | | | | | | | | |
| 21 | 2 | WALL SHELVES | - | | | | | | | | |
| 22 | 1 | REFRIGERATOR, 2 DOOR | - | | | | | | | | |
| 23 | 1 | MERCHANDISER, OPEN AIR | OOF | | | 1 | | 3 | | | EXTEND INDIRECT DRAIN TO FLOOR SINK |
| 24 | 1 | ICE MACHINE AND BIN | 60 | | 1/2 | 2 | | 3 | | | EXTEND INDIRECT DRAIN TO FLOOR SINK |
| 25 | NIC | CABINET, HEATED | - | | | | | | | | |
| 26 | 1 | CONVECTION OVEN, DOUBLE STACKED | 24-48 | | 1/2 | 2 | | 3 | 3/4 | 75K ea | FLEX GAS LINE BY KEC |
| 27 | 1 | STEAMER, 10 PAN | 24 | | 1/2 | 2 | | 3 | 3/4 | 105K | FLEX GAS LINE BY KEC |
| 28 | NIC | SPARE NUMBER | - | | | | | | | | |
| 29 | NIC | SPARE NUMBER | - | | | | | | | | |
| 30 | NIC | SPARE NUMBER | - | | | | | | | | |
| 31 | 1 | EXHAUST HOOD, TYPE 2 | - | | | | | | | | |
| 32 | 1LOT | WALL FLASHING BELOW HOOD | - | | | | | | | | |
| 33 | 1 | SERVING LINE AND BASE | - | | | | | | | | |
| 34 | 5 | HEAT LAMPS | - | | | | | | | | |
| 35 | NIC | EMPLOYEE LOCKERS | - | | | | | | | | |
| 36 | 1 | CLEANING SUPPLY STORAGE | - | | | | | | | | |
| 37 | NIC | MOP SINK | STND | 1/2 | 1/2 | | 2 | | | | |
| 38 | NIC | SPARE NUMBER | - | | | | | | | | |
| 39 | NIC | SPARE NUMBER | - | | | | | | | | |
| 40 | NIC | SPARE NUMBER | - | | | | | | | | |
| 41 | NIC | HOSE BIB FOR CHEM DISPENSER | STND | 1/2 | 1/2 | | | | | | |
| 42 | 1 | TRAY RETURN TABLE | - | | | | | | | | |
| END | OF | ITEMS | | | | | | | | | |

LEGEND:
OOF = Out Of Floor AFF = Above Finished Floor OOC = Out Of Ceiling NIC = Not In kitchen Contract KEC = Kitchen Equipment Contractor GC = General Contractor
STND = Standard Height

## EXHAUST HOOD SCHEDULE

| ITEM # | HOOD SIZE: L x W x D | HOOD TYPE | CFM | EXHAUST COLLAR(S) | COLLAR OPENING | S.P. / COLLAR | GLOBE LIGHTS | LIGHT / FAN SWITCHES | NOTES |
|---|---|---|---|---|---|---|---|---|---|
| 8 | 42x 42 x 24 | 2 | 600 | 1 | 6 x 6 | 0.50" | NA | NA | CONNECT FAN CONTROL RELAY TO DISH MACHINE |
| | | | | | | | | | TRIGGER, ADD DELAY CIRCUIT IF DESIRED |
| | | | | | | | | | SEE CAPTIVE AIRE DRAWINGS |
| 31 | | | | | | | | | THE HOOD RECOMMENDATION IS BASED ON INFO |
| | | | | | | | | | SUPPLIED TO KITCHEN TECH BY SSSD. STATING |
| | | | | | | | | | THERE WOULD BE NO COOKING OCCURRING IN THE |
| | | | | | | | | | KITCHEN, ONLY REHEATING OF PREVIOUSLY COOKED |
| | | | | | | | | | ITEMS. |
| END OF | ITEMS | | | | | | | | |

## KITCHEN PLUMBING - MECHANICAL

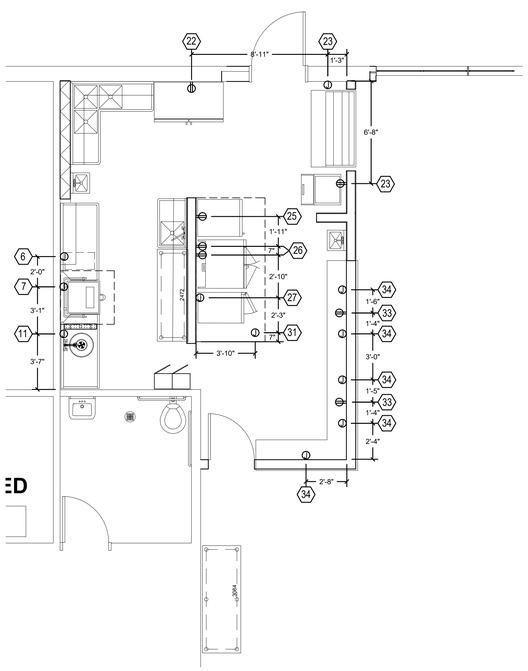


| Electrical Legend | |
|---|---|
| Duplex outlet: | |
| Junction box: | |
| Special power outlet: | |

## EQUIPMENT ELECTRICAL SCHEDULE

| ITEM # | QTY. | DESCRIPTION | AFF | VOLT | AMP | PHASE | KW | NOTES |
|---|---|---|---|---|---|---|---|---|
| 1 | 1 | SINK, 3 COMPARTMENT, CORNER | - | | | | | |
| 2 | 2 | WALL SHELVES | - | | | | | |
| 3 | 2 | HAND SINK W/ SPLASH GUARDS | - | | | | | |
| 4 | 1 | DISH TABLE, CLEAN | - | | | | | |
| 5 | 2 | WALL SHELVES | - | | | | | |
| 6 | 1 | BOOSTER HEATER | 12 | 208 | 20 | 3 | 7 | |
| 7 | NIC | DISH MACHINE | 24 | 208 | 40 | 3 | | |
| 8 | 1 | CONDENSATE HOOD | - | | | | | |
| 9 | NIC | SPARE NUMBER | - | | | | | |
| 10 | NIC | SPARE NUMBER | - | | | | | |
| 11 | 1 | DISPOSAL, 2 HP | 12 | 208 | 9 | 1 | | |
| 12 | 1 | PRE RINSE SPRAYER | - | | | | | |
| 13 | 1 | DISH TABLE, SOILED | - | | | | | |
| 14 | 1 | CLEAN UTENSIL STORAGE | - | | | | | |
| 15 | 1 | SINK, VEG PREP | - | | | | | |
| 16 | 2 | WALL SHELVES | - | | | | | |
| 17 | 1 | WORK TABLE | 48 | 115 | 20 | 1 | | UTILITY OUTLET |
| 18 | NIC | SPARE NUMBER | - | | | | | |
| 19 | NIC | SPARE NUMBER | - | | | | | |
| 20 | NIC | SPARE NUMBER | - | | | | | |
| 21 | 2 | WALL SHELVES | - | | | | | |
| 22 | 1 | REFRIGERATOR, 2 DOOR | 36 | 115 | 10 | 1 | | UNIT SUPPLIED WITH CORD AND PLUG |
| 23 | 1 | MERCHANDISER, OPEN AIR | 24 | 208 | 13 | 1 | | |
| 24 | 1 | ICE MACHINE AND BIN | 60 | 115 | 20 | 1 | | |
| 25 | NIC | CABINET, HEATED | 24 | 115 | 20 | 1 | | UNIT SUPPLIED WITH CORD AND PLUG |
| 26 | 1 | CONVECTION OVEN, DOUBLE STACKED | 24-48 | 115 | 20 | 1 | | UNIT SUPPLIED WITH CORD AND PLUG |
| 27 | 1 | STEAMER, 10 PAN | 24 | 115 | 5 | 1 | | DIRECT CONNECT, NO GFCI |
| 28 | NIC | SPARE NUMBER | - | | | | | |
| 29 | NIC | SPARE NUMBER | - | | | | | |
| 30 | NIC | SPARE NUMBER | - | | | | | |
| 31 | 1 | EXHAUST HOOD, TYPE 2 | OOC | 115 | 15 | 1 | | HOOD LIGHTS AND CONTROLS ONLY |
| 32 | 1LOT | WALL FLASHING BELOW HOOD | - | | | | | |
| 33 | 1 | SERVING LINE AND BASE | 24 | 115 | 20 | 1 | | |
| 34 | 5 | HEAT LAMPS | OOC | 115 | 7 | 1 | | |
| 35 | NIC | EMPLOYEE LOCKERS | - | | | | | |
| 36 | 1 | CLEANING SUPPLY STORAGE | - | | | | | |
| 37 | NIC | MOP SINK | - | | | | | |
| 38 | NIC | SPARE NUMBER | - | | | | | |
| 39 | NIC | SPARE NUMBER | - | | | | | |
| 40 | NIC | SPARE NUMBER | - | | | | | |
| 41 | NIC | HOSE BIB FOR CHEM DISPENSER | - | | | | | |
| 42 | 1 | TRAY RETURN TABLE | - | | | | | |
| END | OF | ITEMS | | | | | | |

LEGEND:
OOF = Out Of Floor AFF = Above Finished Floor OOC = Out Of Ceiling NIC = Not In kitchen Contract KEC = Kitchen Equipment Contractor
GC = General Contractor ROOF = Exterior roof of building EXT = Exterior of building

## KITCHEN ELECTRICAL


TAB Associates
*The Architectural Balance*
0056 Edwards Village Blvd.
Suite 210
Edwards, CO 81632
(970) 766-1470
fax: (970) 766-1471
email: tab@vail.net
www.tabassociates.com

Civil Engineer
Alpine Engineering, Inc.
970-926-3373
Structural Engineer
JH Structural Engineers
303-318-6539
Mechanical Engineer
BG BuildingWorks, Inc.
970-949-6108
Electrical Engineer
BG BuildingWorks, Inc.
970-949-6108


Seal

# Strawberry Park Elementary
# 39620 Amethyst Drive
Steamboat Springs, CO

Revisions:

| No | Description | Date |
|---|---|---|
| | | |

Issue Dates:
CD - 04/06/20

Sheet Title:
**Kitchen Plumbing, Mech and Electrical**

Project No:
1935.02

Sheet No:
FS202


KITCHEN TECH
Foodservice Design and Consulting
356 Monte Vista Street, Brighton, Colorado, 80601
Phone: 303-835-2018 brian@kitchentech.biz

## HOOD INFORMATION – Job#4227338

| HOOD NO. | TAG | MODEL | LENGTH | MAX. COOKING TEMP. | TYPE | APPLIANCE DUTY | DESIGN CFM/ft | TOTAL EXH. CFM | EXHAUST PLENUM RISER(S) WIDTH | LENG. | HEIGHT | DIA. | CFM | VEL. | S.P. | HOOD CONSTRUCTION | HOOD CONFIG. END TO END | ROW | SWITCHES QUANTITY | LOCATION |
|---|---|---|---|---|---|---|---|---|---|---|---|---|---|---|---|---|---|---|---|---|
| 1 | 31 | 6024 VHB-G-ND | 9' 5" | 700 Deg. | II | N/A | 175 | 1648 | | | 4" | 16" | 1648 | 1180 | -0.156" | 304 SS 100% | ALONE | ALONE | 1 FAN 1 LIGHT | FRONT LEFT FACE |
| 2 | 8 | 4224 VHB-G | 4' 6" | 700 Deg. | II | N/A | 150 | 675 | | | 4" | 10" | 675 | 1238 | -0.114" | 304 SS 100% | ALONE | ALONE | | |

## HOOD INFORMATION

| HOOD NO. | TAG | FILTER(S) TYPE | QTY. | HEIGHT | LENGTH | EFFICIENCY @ 7 MICRONS | LIGHT(S) QTY. | TYPE | WIRE GUARD | UTILITY CABINET(S) LOCATION | SIZE | FIRE SYSTEM TYPE | FIRE SYSTEM SIZE | ELECTRICAL MODEL # | SWITCHES QUANTITY | FIRE SYSTEM PIPING | HOOD HANGING WGHT |
|---|---|---|---|---|---|---|---|---|---|---|---|---|---|---|---|---|---|
| 1 | 31 | | | | | | 4 | Recessed | NO | | | | | | | NO | 381 LBS |
| 2 | 8 | | | | | | 0 | | | | | | | | | NO | 182 LBS |

## HOOD OPTIONS

| HOOD NO. | TAG | OPTION |
|---|---|---|
| 1 | 31 | FIELD WRAPPER 18.00" High Front, Left, Right |
| | | BACKSPLASH 80.00" High X 113.00" Long 304 SS Vertical |
| 2 | 8 | FIELD WRAPPER 18.00" High Front, Left, Right |

FOR QUESTIONS, CALL THE
COLORADO REGIONAL SALES OFFICE
7300 S. Alton Way, #5B, Centennial, CO 80112
PHONE: (720) 570-0981
FAX: (919) 227-5999

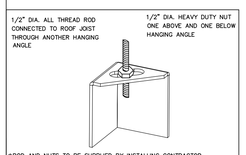


*ROD AND NUTS TO BE SUPPLIED BY INSTALLING CONTRACTOR
HANGING ANGLE IS PRE-PUNCHED AT FACTORY

## HANGING ANGLE DETAILS

| HOOD STYLE / MODEL | 450 DEGREES cfm/ft. | 600 DEGREES cfm/ft. | 700 DEGREES cfm/ft. |
|---|---|---|---|
| CANOPY ND2 | 150 | 200 | 250 |
| WITH END PANELS (15% reduction) | 127.5 | 170 | 212.5 |
| SLOPED SND-2 | 228 | 294 | – |
| ISLAND ND-2WI | 269 | 300 | 350 |
| NDI | 346 | 422 | 475 |

## ETL HOOD LISTING DETAIL

EXHAUST CFM=LENGTH OF HOOD X CFM/LIN.FT. (LOAD)

SUPPLY CFM=EXHAUST CFM X PERCENTAGE REQUIRED

TOTAL DUCT AREA=144 X $\frac{\text{CFM}}{\text{FPM}(*)}$

DUCT LENGTH= $\frac{\text{TOTAL DUCT AREA}}{\text{DUCT DEPTH}}$

*CAPTIVE-AIRE VENTILATOR DUCT SIZES ARE CALCULATED USING AN EXHAUST VELOCITY OF 1500-1800 FPM AND A SUPPLY VELOCITY OF 1000 FPM.

## CALCULATIONS UTILIZED

CAPTIVE-AIRE HOODS ARE BUILT IN COMPLIANCE WITH:

LISTED #3054804-001 & #3054804-002 — STANDARD 710 — Intertek — BUILT IN ACCORDANCE WITH NFPA No. 96

Listed under ETL File number 3054804-001/002

## BUILDING CODES

CAPTIVE-AIRE HOODS HAVE OPTIONAL CLEARANCE REDUCTION SYSTEMS AVAILABLE AS FOLLOWS:

| MATERIAL | CLEARANCE REDUCTION SYSTEM |
|---|---|
| NON-COMBUSTIBLE | NONE REQUIRED |
| LIMITED-COMBUSTIBLE | 3" UNINSULATED STANDOFF |
| COMBUSTIBLE | 1" INSULATED STANDOFF |

## CLEARANCE TO COMBUSTIBLES

INSTALLATION

1. ALL ELECTRICAL "FIELD" CONNECTIONS AND RELATED INTERCONNECTIONS BY ELECTRICAL CONTRACTORS.
2. ALL PLUMBING "FIELD" CONNECTIONS AND RELATED INTERCONNECTIONS BY PLUMBING CONTRACTORS.
3. HANGING BRACKETS LOCATED AND WELDED AS SHOWN ON PLANS. ALL OTHER HANGER MATERIALS PROVIDED BY INSTALLING CONTRACTORS.
4. ALL CONNECTIONS FROM CAPTIVE-AIRE DUCT PER MECHANICAL CONTRACTORS'S PLANS.
5. COOKING EQUIPMENT TO SHUTOFF IN EVENT OF FIRE.
6. EXHAUST FANS TO TURN ON IN EVENT OF FIRE.
7. ALL LIGHTS FIXTURE SHOWN INSTALLED BY CAPTIVE-AIRE ARE FACTORY PREWIRED. INTERCONNECTIONS BETWEEN HOODS AND TO SWITCHES BY ELECTRICAL CONTRACTORS.
8. LAMPS FOR LIGHT FIXTURES BY INSTALLING CONTRACTORS.
9. SEISMIC RESTAINTS ARE RESPONSIBILITY OF INSTALLING CONTRACTOR.
10. INSTALLING CONTRACTORS ASSUME ALL RELATED REPONSIBILITY FOR VERIFICATION OF DIMENSIONAL DATA CONTAINED ON THESE DOCUMENTS FOR ACCURACY, INTEGRATION, AND ADMINISTRATION OF CODE REQUIREMENTS IN EFFECT PRIOR TO ANY RELEASE FOR PRODUCTION OF EQUIPMENT SHOWN.

BALANCE

11. KITCHEN HOODS MUST BE BALANCED WITH KITCHEN.
12. KITCHEN SHALL BE NEGATIVE WITH RESPECT TO DINING AREA.
13. RESTAURANT SHALL BE POSITIVE WITH RESPECT TO AMBIENT PRESSURE.

ADDITIONAL

14. WRITTEN HOOD DIMENSIONS HAVE PRECEDENCE OVER SCALE.
15. SIGNED AND "APPROVED" COPIES OF THIS DOCUMENT MUST BE RECEIVED BY THE FACTORY PRIOR TO COMMENCEMENT OF FABRICATION.

## GENERAL NOTES

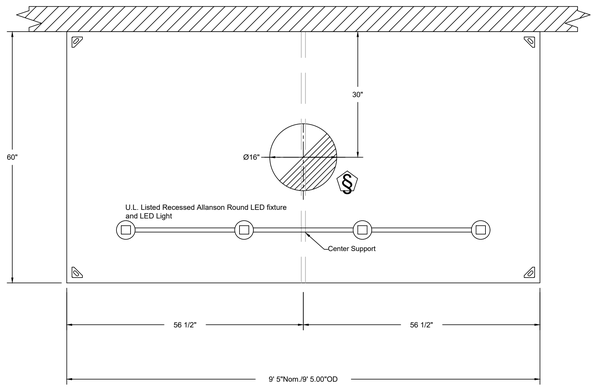


PLAN VIEW – Hood #1 (31)
9' 5.00" LONG 6024VHB-G-ND

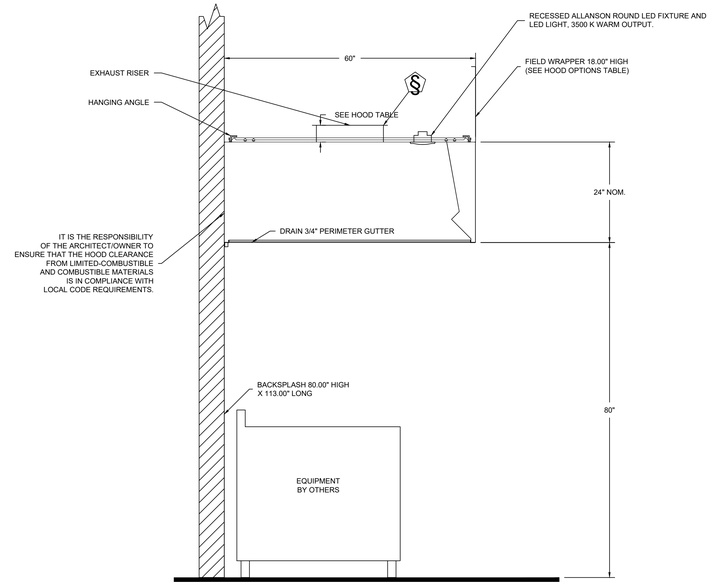


SECTION VIEW – MODEL 6024VHB-G-ND
HOOD – #1 (31)

System Design Verification (SDV)

If ordered, CAS Service will perform a System Design Verification (SDV) once all equipment has had a complete start up per the Operation and Installation Manual. Typically, the SDV will be performed after all inspections are complete.

Any field related discrepancies that are discovered during the SDV will be brought to the attention of the general contractor and corresponding trades on site. These issues will be documented and forwarded to the appropriate sales office. If CAS Service has to resolve a discrepancy that is a field issue, the general contractor will be notified and billed for the work. Should a return trip be required due to any field related discrepancy that cannot be resolved during the SDV, there will be additional trip charges.

During the SDV, CAS Service will address any discrepancy that is the fault of the manufacturer. Should a return trip be required, the general contractor and appropriate sales office will be notified. There will be no additional charges for manufacturer discrepancies.

**REVISIONS**

| DESCRIPTION | DATE: |
|---|---|
| | |
| | |
| | |
| | |

CAPTIVE-AIRE
www.captiveaire.com
Denver Office
7300 S Alton Way Building 5, Suite B, Centennial, CO, 80112 PHONE: (720) 570-0981 FAX: (919) 227-5999 EMAIL: regi42@captiveaire.com

Steamboat Springs Elem - Steamboat Springs, CO
STEAMBOAT SPRINGS, CO, 80487

**DATE:** 2/13/2020

**DWG.#:** 4227338

**DRAWN BY:** MAR-42

**SCALE:** 3/4" = 1'-0"

**MASTER DRAWING**

**SHEET NO.** 1

TAB Associates
*The Architectural Balance*
0056 Edwards Village Blvd.
Suite 210
Edwards, CO 81632
(970) 766-1470
fax: (970) 766-1471
email: tab@vail.net
www.tabassociates.com

Civil Engineer
Alpine Engineering, Inc.
970-926-3373
Structural Engineer
JH Structural Engineers
303-318-6539
Mechanical Engineer
BG BuildingWorks, Inc.
970-949-6108
Electrical Engineer
BG BuildingWorks, Inc.
970-949-6108

Seal

# Strawberry Park Elementary
# 39620 Amethyst Drive
## Steamboat Springs, CO

| Revisions: No | Description | Date |
|---|---|---|
| | | |

Issue Dates:
CD - 04/06/20

Sheet Title:
**Kitchen Exhaust Hood**

Project No:
1935.02

Sheet No:
FS203

KITCHEN TECH
Foodservice Design and Consulting
356 Monte Vista Street, Brighton, Colorado, 80601
Phone: 303-835-2018 brian@kitchentech.biz

PLAN

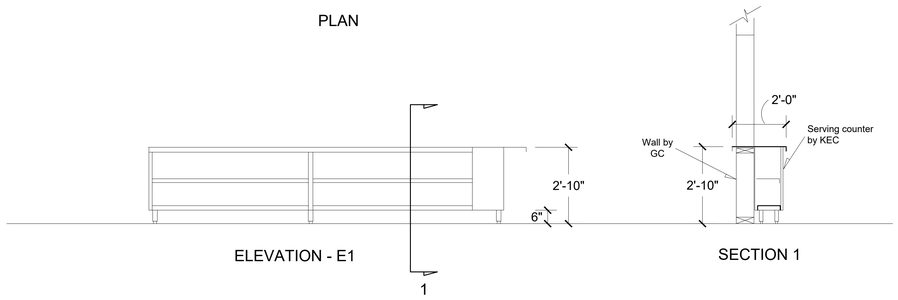


ELEVATION - E1

SECTION 1

ELEVATION - E2

# ITEM # 33: SERVING LINE:
## Top and under counter base

General Specification:

Top shall be 14 gauge 300 series stainless steel, base and shelves shall be 16 gauge fully welded and polished 300 series stainless steel, reinforced to create a structurally sound unit. Support legs to be 1-5/8" round stainless steel tubing w/ adjustable S/S bullet feet. Base cabinet shall include a stainless steel intermediate shelf, mounted inside the cabinet with equal distance above and below. KEC to coordinate all custom fabrication work with construction progress and field dimensions for exact length, width and height. KEC to field cut openings in base to allow access to plumbing, electrical rough in and cords.

## GENERAL NOTES

Certain items are listed in the Itemized Equipment Specification as supplied by KEC and installed by G.C. Failure to observe / include these specifications in the G.C. bid does NOT obsolve the G.C. of responsibility to fulfill / perform to these specifications. Not all portions of the following information apply to all projects. Please request clarification, if questions arise.

It shall be the responsibility of the G.C. and all trades to inspect the job site, review and familiarize themselves with the relevant kitchen equipment drawings, health department requirements, schematics, cut sheets, specification documents, contract documents, etc. The submission of proposals by the G.C. and subcontractors will be construed as evidence that they have familiarized themselves with the kitchen project in total. Claims made subsequent to the proposals for additional materials and labor because of difficulties encountered, will not be recognized if they could have been foreseen had proper examination been made.

The KEC food service drawings are provided for reference and are the opinion of Kitchen Tech only. All items are to be verified with the Architect, Interior Designers, Engineers and or Ownership as required. At no time are the KEC Food Service drawings to be used for construction purposes or referanced as construction documents.

### PLUMBING:
All utility points shown on these drawing shall be roughed in at the designated location and shall be concealed behind / inside the walls. All drain lines to be run 6" AFF with no open Uni-strut, supports, wire ties, etc. Flex gas disconnect and restraint cables supplied by the KEC are installed by G.C. Hand sinks supplied by the KEC are installed by G.C. The G.C. is responsible to flush / sanitize all debris/metal filings from the water supply lines prior to installation of faucets, pot/kettle fillers, hand sinks, etc. All damage due to foreign material entering fixture seats and washers is the responsibility of the G.C. G.C. and or plumbing contractor shall provide all required back flow prevention devices as required by code and health dept. All floor sinks must be located as to allow access for cleaning / clean out and ½ exposure of floor sink from equipment edge, without causing a trip hazard. All floor sink grates are to be flush with the finished floor. All floor sinks should be 12"x12"x8" porcelain or stainless steel, to allow for proper capture of large quantities of discharge water from dish machines and 3 compartment sinks. All hand sinks should be located as not to interfere with adjacent equipment placement. Some municipalities now require solids interceptors to be installed downstream of garbage disposal units. This interceptor shall be specified by the mechanical engineers, furnished and installed by the mechanical contractor. Relocation of hand sinks due to improper placement is the responsibility of the plumbing contractor. It is the responsibility of the plumbing engineer(s) to determine size and location of the grease interceptor and which kitchen drains, hand sinks, floor sinks, etc., must drain to it as per code. It is the responsibility of the plumbing contractor and or engineer(s) to obtain Health Department approval for existing floor drains, floor sinks, etc, which they intend to reuse and may not comply with current codes. The KEC supplies only items called out in the equipment purchase contract. Commercial dish machines require a 140 degree hot water supply. It is the responsibility of the plumbing engineer to ensure 140 degree water is available to the dish machine when activated. The KEC does not supply plumbing parts, fittings, brackets, mounts, escuctions, sleeves, supplies, etc. unless specified. When the KEC supplies a range mounted salamander broiler, the plumber is responsible to hard pipe both gas supplies to a common connection point, with individual gas regulators run to each unit. In this installation configuration, only one flex gas line is needed. All gas fired equipment will require the manufacturers supplied gas regulator, to be installed by the GC. GC to supply any alternate, high pressure, and gas regulators required to make the equipment operational. Alternate regulator installation may void manufactures warranty, please consult with the manufacturer for specific details. All gas lines are to be run concealed inside walls w/ stub out for connection to equipment. Commercial food service equipment manufacturers reserve the right to make periodic changes to their products, regarding gas volume and pressure requirements, without changing their specification sheets and without notifying the food service consultant or the end user. While every effort is made to ensure accurate utility information, at no time will Kitchen Tech be responsible for equipment manufacturer changes to utility service requirements. All drain and condensate lines shall be copper, no plastic drain lines will be accepted.

### ELECTRICAL:
All utility points shown on these drawing shall be roughed in at the designated location and electrical runs shall be concealed behind / inside the walls. All above and below ceiling electrical must be complete prior to equipment installation. This includes but is not limited to pulling of wire, outlet installation and trimming of outlets. Direct connect wire must be pulled to the j-box and ready for connection to equipment. All locations and cabling requirements for Point of Sale, telephone service, CAT-5e, etc. is the responsibility of the electrical engineer / contractor to coordinate with with the operator / owner. The KEC does not supply any electrical parts or supplies. GFCI's are required as per code. It is the responsibility of the electrical engineer and or electrical contractor to coordinate the specific electrical requirements of all owner supplied equipment and or existing equipment. Commercial foodservice equipment manufacturers reserve the right to make periodic changes to their products, regarding voltage and amperage requirements, without changing their specification sheets and without notifying the foodservice consultant or the end user. While every effort is made to ensure accurate utility information, at no time will Kitchen Tech be responsible for equipment manufacturer changes to utility service requirements. All cord reels shall be Hubbell model number HLBC25163C, unless unacceptable due to code. GC shall submit alternate cord reels for review and approval.

### WALK IN COOLER / FREEZER:
The walk in cooler and freezer is supplied with temperature monitoring system, adjacent to the entry door. This system may be connected to the building monitoring system in the event of temperature rise inside the cooler / freezer. Interconnection of the supplied monitoring system and any related items or equipment to make it operational, is the responsibility of the GC. Refrigerant leak detection and or alarm equipment as required be code, is the responsibility of the GC. All mechanical, electrical or plumbing connections are the responsibility of the GC. The only items which will be provided by the KEC are specifically called out in the contract documents and or equipment specification.

### GARAGE DOORS / LARGE COILING DOORS:
Any doors which open from a cafeteria or eating area to the exterior of the building (outside) may require an air curtain, in order to meet health dept. requirements. This should be coordinated with mechanical and health dept. requirements.

### ELECTRICAL CONTROL PANEL:
When the Electrical Control Panel (ECP) is not provided by the KEC, the GC shall provide the ECP. Please refer to the project specification documents pertaining to the exhaust hood and ECP. The ECP controls exhaust fans, MUA, electrical below the hood, etc, in the event the fire suppression system is triggered. No electrical disconnects, relays, shunt trip breakers, etc, supplied by the KEC or fire suppression contractor. The coordinated function and wiring of the ECP is the responsibility of the electrical engineer, electrical contractor and GC. The fire suppression control cabinet is not the ECP and is not a suitable enclosure for the ECP. This system must be operational for final Building / Fire Dept. inspection, prior to final health department inspection. It is recommended that the electrical engineer complete a schematic showing the interconnect system as part of the electrical engineering drawings.

### FIRE SUPPRESSION SYSTEM:
When the KEC supplies the fire suppression system it will include the fire suppression control cabinet w/ dry contactors (microswitches), piping of the exhaust hood w/ nozzles and chrome sleeves, plenum piping, manual gas valve, manual pull station adjacent to kitchen exit as per code, one K class fire extinguisher and one final inspection. Installer shall provide written plans detailing the location of the control cabinet and pull station locations. This inspection will be conducted after the ECP interconnection system is fully operational. The GC is responsible to provide any additional electrical contactors as needed for additional connections. The conduit and j-box for the manual pull station shall be supplied by GC and location coordinated with the fire suppression installer. The manual gas valve will be supplied to the plumber during construction for installation in the gas supply line prior to the equipment. This valve shall be installed above ceiling (with suitable inspection access panels), within 10' of the exhaust hood and in a place easily accessible for regulatory inspections.

### CONDENSATE HOOD:
When a condensate hood is specified for the project, the exhaust fan shall be controlled by either a manual wall mounted switch or by the dish machine operation via internal electrical contacts provided by the dish machine manufacturer. If a "delayed fan off" function is desired, the electrical engineer shall specify the correct delay device for the project.

### LIGHTING IN KITCHEN AREA:
Health department Foot Candle (F.C.) lighting requirements are as follows:
Kitchen and Bar areas:
Min. of 50 F. C. at work surface or at 36" AFF.
Utensil / equipment storage and lav:
Min. of 30 F.C.
Walk in cooler / freezer:
Min. of 30 F.C.

### KITCHEN FINISHES: (recommended)
Wall below exhaust hood: Shall be finished with 20 gauge stainless steel wall paneling, extending from the top of the tile or floor finish; to behind the exhaust hood. SS wall paneling shall extend 18" to the left and 18" to the right of the exhaust hood and shall extend from the top of the finished floor to the ceiling.
Walls: FRP (fiberglass reinforced plastic) panels installed from floor to ceiling are recommended, in a light color or white which will easily show dirt or soil. Walls consisting of finished drywall with a painted surface (epoxy or otherwise) are not recommended due ease of damage from long term cleaning, scrubbing or chipping of wall surface.
Ceilings: White, vinyl coating gypsum panels are recommenced above all foodservice and bar areas.
Floors: Quarry tile (non slip, sealed and sealed grout) is recommended. Epoxy flooring below heat generating equipment (ovens, ranges, steamers, etc.) is NOT RECOMMENDED. Heat in these areas can exceed 200 degrees Fahrenheit and exceed the auto-ignition levels of the epoxy flooring.
Any variation from these recommendations may require samples be submitted to the health department for approval. It is the responsibility of the general contractor and or architect to supply the KEC with alternate samples for submittal.

### HVAC:
All hanging of hoods, ductwork runs, welding, fire wrap, etc, must be complete prior to equipment installation. When the KEC's contract includes supplying the exhaust hoods and or condensate hoods, it does NOT include installation, hanging, fans, switches, controls, ductwork, welding, roof penetrations, fire wrap, Electrical Control Panel, shunt trip breakers, interlock, or other items to make those systems operational; unless specifically called out in the KEC contract documents.

### WALL SHELVES AND WALL MOUNTED EQUIPMENT :
Unless detailed / noted otherwise, all wall mounted equipment / shelving will be mounted directly to the wall studs and does not require internal wall backing. Heavy gauge metal wall studs will be required to ensure proper load handling.

### KITCHEN EQUIPMENT INSTALLATION:
Installation is defined as equipment delivery to job site, assemble / setup, move in to place and make ready for final connection by the G.C. It does not include any type of mechanical, electrical, plumbing work or instruction how to perform.

Prior to the kitchen equipment installation all construction, mechanical, electrical, plumbing and HVAC must be 100% complete, other than equipment needing only final connection. Ceiling tiles and light fixtures installed with all above ceiling work/inspections complete. Walls to be completely finished as per architectural specifications (epoxy or FRP paneling), see finishes section for wall below exhaust hood. Floor to be set, sealed, cured and ready for heavy use. All floor sink covers/grates shall be in place prior to equipment being set in place to avoid an unsafe work environment. Health Department construction inspection has been completed. Under the above stated conditions the install process will take approximately 10-15 working days to complete prior to final health department inspection. Weekend, holiday and or after hours work is not included unless specifically called out in the installation contract. Significant delays should be anticipated/scheduled when the above noted conditions are not complete at the time of KEC installation.

The G.C. shall provide a dumpster suitable for all trash removal generated by the kitchen equipment installation process. All exterior paving and concrete work providing access to the kitchen area must be complete, prior to equipment installation or G.C. shall provide alternate unimpeded access. The G.C. shall provide finished floor/carpet protection to facilitate moving heavy kitchen equipment from the nearest street level entrance to the kitchen area. GC shall provide clear, unobstructed ingress and egress from the kitchen area. In the event the kitchen is located above or below street level and the elevators / lifts are not yet operational or certified for use, the GC shall provide at their cost, all lifts, attended elevator access, additional manpower, etc. to facilitate movement of the kitchen equipment from street level to the kitchen location. Stairs are not considered acceptable ingress and egress from the kitchen area.

### USED OR OWNER SUPPLIED EQUIPMENT:
When the owner supplies any new or used equipment outside the KEC equipment purchase contract and or the commercial kitchen is being remodeled where existing equipment will be reused in the new design, the owner is fully responsible for disconnecting, moving, storage, staging, delivery, repair, modification, cleaning, refurbishment, installation, final connection, start up, calibration, health department and regulatory compliance of those items, unless specifically called out in the equipment purchase contract. It is the responsibility of the electrical engineer and or electrical contractor to coordinate the specific electrical requirements of all owner supplied equipment and or existing equipment.

All dimensions referenced or shown are measured from finished surfaces.

All kitchen equipment is strictly prohibited from being used as a work surface by any and all trades. Failure to observe this restriction will result in all damages being charged back to the respective subcontractor / trade. All equipment will be set in place once as per kitchen design schematic for connection by the respective trades. Equipment which is moved for any reason must be returned to its original location.

### COMPLIANCE TO NOTES:
The KEC equipment contract and all notes contained herein supersede any and all verbal conversation with the KEC regarding responsibility to perform work or supply any part or item. Any issues which contradict these notes are to be submitted in writing to the architect, KEC and owner for review. An approval or denial will be supplied in writing to the GC or the respective trade making the request. At no time will any on site request of the KEC be construed as an obligation on the part of the KEC. Requests made of the KEC which are outside the scope of the KEC contract will not be accepted as cause for work delays. All trades are responsible for taking whatever steps are necessary to complete their scope of work in a timely manner.

### WARRANTY:
All warranties are provided and serviced by the respective manufacturers and or warranty repair service agents. This information can be found in the Operation & Maintenance documents provided by the KEC. Projects in outlying, rural or in areas outside the service agents service area, should be aware that most warranties will NOT cover additional fees for travel outside their standard service area. The end user / customer will be fully responsible for any and all "out of area" travel expenses. It is recommended the end user / customer ask about additional travel fees not covered by the factory warranty, BEFORE engaging a service agent .

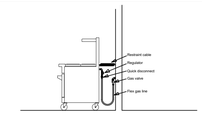


RANGE, STEAMERS, CONVECTION OVENS

Install all gas related items in accordance with manufacturers specifications and local codes. Note the gas flow direction imprinted on the regulator. Gas regulator and gas flex line w/ quick disconnect and restraint cable supplied, by KEC. Hard gas piping, gas valves, couplings, assembly, connection (interconnection of range with salamander) and installation / adjustment of restraint cable, etc by GC.

Gas connection schematic

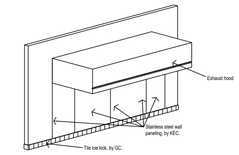


UL listed exhaust hood enclosure provided as specified.

Wall paneling shall shall consist of 20 gauge stainless steel, w/ chrome joiner strips and capped edges, by KEC.

Wall preparation beneath hood: fire taped, smooth, flat, primed drywall, by G.C. Any irregularities in the wall surface prior to application of S/S wall paneling will result in those irregularities unavoidably being transferred to the S/S wall paneling. The tile toe kick must be level and straight to avoid horizontal gaps where the S/S wall panel contacts the tile, as the vertical edges of the S/S wall panels must be kept level.

Exhaust Hood / Wall Paneling

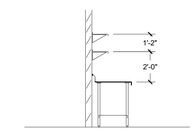


WALL SHELF MOUNTING DETAIL


TAB Associates
*The Architectural Balance*
0056 Edwards Village Blvd.
Suite 210
Edwards, CO 81632
(970) 766-1470
fax: (970) 766-1471
email: tab@vail.net
www.tabassociates.com

Civil Engineer
Alpine Engineering, Inc.
970-926-3373
Structural Engineer
JH Structural Engineers
303-318-6539
Mechanical Engineer
BG BuildingWorks, Inc.
970-949-6108
Electrical Engineer
BG BuildingWorks, Inc.
970-949-6108


Seal

# Strawberry Park Elementary
## 39620 Amethyst Drive
## Steamboat Springs, CO

| Revisions: | | |
|---|---|---|
| No | Description | Date |
| | | |

Issue Dates:
CD - 04/06/20

Sheet Title:
**General Notes**

Project No:
1935.02

Sheet No:
FS502


KITCHEN TECH
Foodservice Design and Consulting
356 Monte Vista Street, Brighton, Colorado, 80601
Phone: 303-835-2018 brian@kitchentech.biz