VP BUILDINGS ®

VARCO PRUDEN

a division of BlueScope Buildings North America, Inc.

DRAWING INDEX

DRAWING TITLE	PAGES
Cover Sheet	1
Codes and Loads	2,3
Notes	4
Anchor Rod Plan	5-6
Primary Structural	7-21
Secondary Structural	22-29
Covering	30-38
Special Drawings	
Standard Erection Details	
Planograph Details	39-42

DRAWING RELEASE HISTORY

TYPE	DATE	DESCRIPTION
ANCHOR ROD DRAWINGS REV 0	07/30/2021	FOR CONSTRUCTION
PERMIT DRAWINGS REV 0	07/30/2021	PERMIT SET- For Building Dept. Approval
ANCHOR ROD DRAWINGS REV 1	09/08/2021	FOR CONSTRUCTION
PERMIT DRAWINGS REV 1	09/08/2021	PERMIT SET- For Building Dept. Approval

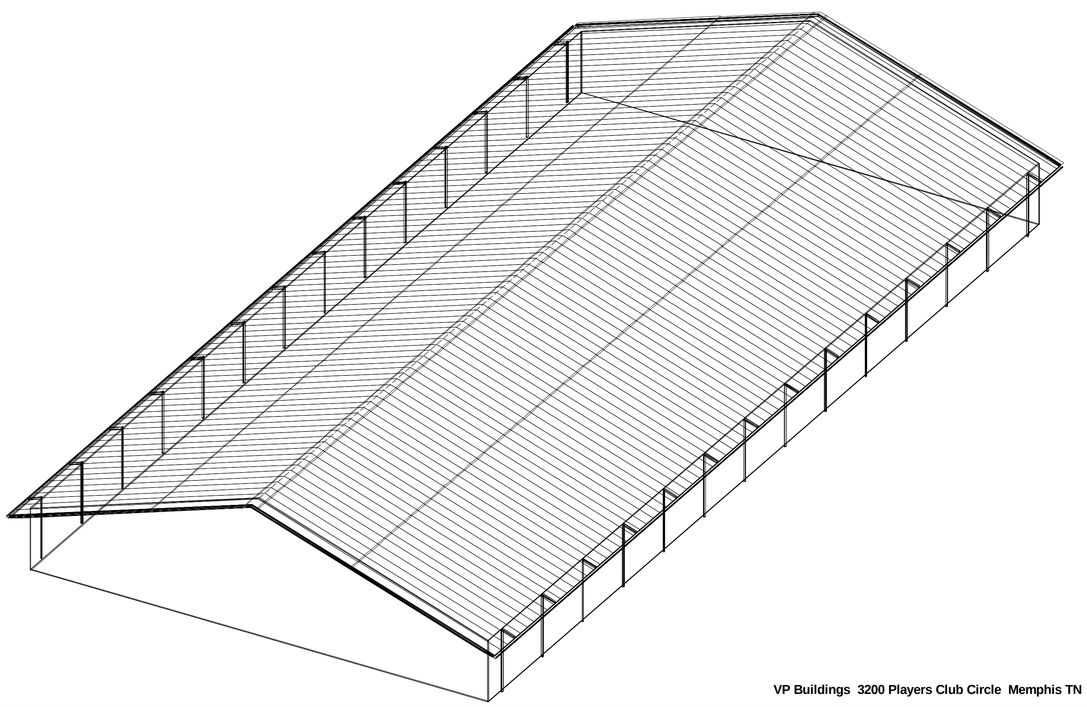

VP Buildings 3200 Players Club Circle Memphis TN 38125

GENERAL NOTES

MATERIALS

	ASTM DESIGNATION	
3 PLATE WELDED SECTIONS	A529, A572, A1011, A1018	GRADE 55
COLD FORMED LIGHT GAGE SHAPES	A653, A1011	GRADE 60
BRACE RODS	A572, A510	GRADE 50
HOT ROLLED MILL SHAPES	A36, A529, A572, A588, A992	GRADE 36 OR 50
HOT ROLLED ANGLES	A529, A572, A588, A992	GRADE 50
HOLLOW STRUCTURAL SECTION (HSS)	A500	GRADE B
CLADDING	A653, A792	GRADE 50 OR GRADE 80

HIGH STRENGTH BOLT TIGHTENING REQUIREMENTS

IT IS THE RESPONSIBILITY OF THE ERECTOR TO ENSURE PROPER BOLT TIGHTNESS IN ACCORDANCE WITH APPLICABLE REGULATIONS. SEE RCSC SPECIFICATION FOR STRUCTURAL JOINTS USING HIGH STRENGTH BOLTS FOR MORE INFORMATION. SEE ERECTION GUIDE FOR BOLT TIGHTENING INSTRUCTIONS. THE FOLLOWING CRITERIA MAY BE USED TO DETERMINE THE BOLT TIGHTNESS (I.E.-SNUG TIGHT OR PRE-TENSION) UNLESS REQUIRED OTHERWISE BY LOCAL JURISDICTION OR CONTRACT.

ALL A490 BOLTS SHALL BE "PRE-TENSIONED". A325 BOLTS IN PRIMARY FRAMING AND BRACING CONNECTIONS MAY BE "SNUG-TIGHT" EXCEPT AS FOLLOWS;

PRE-TENSION A325 BOLTS IF BUILDING SUPPORTS A CRANE GREATER THAN 5 TON CAPACITY.

PRE-TENSION A325 BOLTS IF BUILDING SUPPORTS MACHINERY THAT CREATES VIBRATION, IMPACT, OR STRESS REVERSALS ON CONNECTIONS.

PRE-TENSION A325 BOLTS IF LOCATED IN HIGH SEISMIC AREAS. FOR IBC BASED CODES; HIGH SEISMIC IS DESIGN CATEGORY D, E OR F. SEE CODES AND LOADS SECTION BELOW FOR DETAILS.

PRE-TENSION ANY CONNECTION WITH DESIGNATION A325-SC. SLIP CRITICAL (SC) CONNECTIONS MUST BE FREE OF PAINT, OIL OR OTHER MATERIALS THAT REDUCE FRICTION AT CONTACT SURFACES. GALVANIZED OR LIGHTLY RUSTED SURFACES ARE ACCEPTABLE.

IN CANADA, ALL A325 AND A490 BOLTS SHALL BE "PRE-TENSIONED", EXCEPT FOR SECONDARY MEMBERS AND FLANGE BRACES.

SECONDARY MEMBERS AND FLANGE BRACE CONNECTIONS ARE ALWAYS "SNUG TIGHT", UNLESS INDICATED OTHERWISE IN ERECTION DRAWING DETAILS.

INSPECTION AND TESTING

SPECIAL INSPECTIONS AND TESTING REQUIRED BY AUTHORITY HAVING JURISDICTION (AHJ) DURING CONSTRUCTION AND/OR STEEL FABRICATION IS THE RESPONSIBILITY OF THE OWNER OR OWNERS AUTHORIZED AGENT. WHEN REQUIRED, THE OWNER SHALL EMPLOY A QUALITY ASSURANCE AGENCY (QAA) APPROVED BY THE AHJ. THE BUILDER IS RESPONSIBLE TO COORDINATE BETWEEN THE QAA FIRM AND BBNA FABRICATION FACILITIES. THE TYPE AND EXTENT OF SPECIAL INSPECTIONS AND NDT WELD TESTING MUST BE SPECIFICALLY STIPULATED IN CONTRACT DOCUMENTS OR BBNA WILL ASSUME SPECIAL INSPECTIONS AND/OR NDT TESTING ARE WAIVED AS PERMITTED BY THE BUILDING CODE BASED ON BBNA FACILITIES IAS AC472 ACCREDITATION.

REVIEWED FOR CODE COMPLIANCE 01/27/2022

Reviewed By: AY
9/9/2021

COLORADO LICENSED EMANUEL M. WEBER 0052792 PROFESSIONAL ENGINEER

09/10/2021

THE VP ENGINEER'S SEAL APPLIES ONLY TO THE WORK PRODUCT OF VP AND DESIGN AND PERFORMANCE REQUIREMENTS SPECIFIED BY VP. THE VP ENGINEER'S SEAL DOES NOT APPLY TO THE PERFORMANCE OR DESIGN OF ANY OTHER PRODUCT OR COMPONENT FURNISHED BY VP EXCEPT TO ANY DESIGN OR PERFORMANCE REQUIREMENTS SPECIFIED BY VP.

THIS DRAWING, INCLUDING THE INFORMATION HEREON, REMAINS THE PROPERTY OF VP BUILDINGS. IT IS PROVIDED SOLELY FOR ERECTING THE BUILDING DESCRIBED IN THE APPLICABLE PURCHASE ORDER AND MAY BE REPRODUCED ONLY FOR THAT PURPOSE. IT SHALL NOT BE MODIFIED, REPRODUCED OR USED FOR ANY OTHER PURPOSE WITHOUT PRIOR WRITTEN APPROVAL OF VP BUILDINGS.

THE GENERAL CONTRACTOR AND/OR ERECTOR IS SOLELY RESPONSIBLE FOR ACCURATE GOOD QUALITY WORKMANSHIP IN ERECTING THIS BUILDING IN ACCORDANCE WITH THIS DRAWING, DETAILS REFERENCED IN THIS DRAWING, ALL APPLICABLE VP BUILDINGS ERECTION GUIDES, AND INDUSTRY STANDARDS PERTAINING TO PROPER ERECTION, INCLUDING THE CORRECT USE OF TEMPORARY BRACING.

CAN/CSA A660 QUASAR Certified

IAS ACCREDITED Metal Building Systems AC 472

D

COVER SHEET

BUILDER	Rule Steel
CUSTOMER	
LOCATION	Clark, Colorado
PROJECT	DC Riding Arena
BUILDERS PO#	
FILENAME	DC Riding Arena Option 2

VP BUILDINGS VARCO PRUDEN

VPC VERSION: 2021.2a

a division of BlueScope Buildings North America, Inc.

JOBNO	21-07748-01
DATE	09/08/2021
DRAWN / CHECK	SDA SDA
PAGE	1

Codes and Loads
WHEN MULTIPLE BUILDINGS ARE INVOLVED, SPECIFIC LOAD FACTORS FOR DIFFERING OCCUPANCIES, BUILDING DIMENSIONS, HEIGHTS, FRAMING SYSTEMS, ROOF SLOPES, ETC., MAY RESULT IN DIFFERENT LOAD APPLICATION FACTORS THAN INDICATED BELOW. SEE CALCULATIONS FOR FURTHER DETAILS. WIND LOADS ARE APPLIED TO OVERALL BUILDING ENVELOPE. COMMON WALLS BETWEEN CONNECTED SHAPES ARE NOT SUBJECT TO EXTERNAL WIND LOADS.

City: Clark   County: Routt   State: Colorado   Country: United States

Building Code
Building Code: 2018 International Building Code   Structural: 16AISC - ASD   Rainfall: I: 4.00 inches per hour
Building Risk/Occupancy Category: II (Standard Occupancy Structure)   Cold Form: 16AISI - ASD   f'c: 3000.01 psi Concrete

Dead and Collateral Loads
Collateral Gravity:2.50 psf
Collateral Uplift: 0.00 psf

Wind Load
Wind Speed: Vult: 115.00 (Vasd: 89.08) mph
The 'Envelope Procedure' is Used
Primaries Wind Exposure: C - Kz: 0.953
Parts Wind Exposure Factor: 0.953
Wind Enclosure: Enclosed
Topographic Factor: Kzt: 1.0000
Ground Elevation Factor: Ke: 0.7686

NOT Windborne Debris Region
Base Elevation: 0/0/0
Site Elevation: 7270.0 ft
Primary Zone Strip Width: 2a: 20/9/10
Parts / Portions Zone Strip Width: a: 10/4/13
Basic Wind Pressure: q: 21.08, (Parts) 21.08 psf

Material Dead Weight
Roof Covering + Second. Dead Load: Varies
Frame Weight (assumed for seismic):4.63 psf - USR

Snow Load
Ground Snow Load: pg: 93.00 psf
Flat Roof Snow: pf: 71.61 psf
Design Snow (Sloped): ps: 71.61 psf
Rain Surcharge: 0.00
Exposure Factor: 2 Partially Exposed - Ce: 1.00
Snow Importance: Is: 1.000
Thermal Factor: Kept just above freezing - Ct: 1.10
Ground / Roof Conversion: 0.70
Unobstructed, Slippery

Roof Live Load
Roof Live Load: 20.00 psf Reducible

Seismic Load
Lateral Force Resisting Systems using Equivalent Force Procedure
Mapped MCE Acceleration: Ss: 59.40 %g
Mapped MCE Acceleration: S1: 10.30 %g
Site Class: Stiff soil (D) - Default
Seismic Importance: Ie: 1.000
Design Acceleration Parameter: Sds: 0.5246
Design Acceleration Parameter: Sd1: 0.1644
Seismic Design Category: D
Seismic Snow Load: 14.32 psf
% Snow Used in Seismic: 20.00
Diaphragm Condition: Flexible
Fundamental Period Height Used: 26/0/0

Transverse Direction Parameters
Ordinary Steel Moment Frames
Redundancy Factor: Rho: 1.30
Fundamental Period: Ta: 0.3794
R-Factor: 3.50
Overstrength Factor: Omega: 2.50
Deflection Amplification Factor: Cd: 3.00
Base Shear: V: 0.1238 x W

Longitudinal Direction Parameters
Ordinary Steel Concentric Braced Frames
Redundancy Factor: Rho: 1.00
Fundamental Period: Ta: 0.2303
R-Factor: 3.25
Overstrength Factor: Omega: 2.00
Deflection Amplification Factor: Cd: 3.25
Base Shear: V: 0.1614 x W

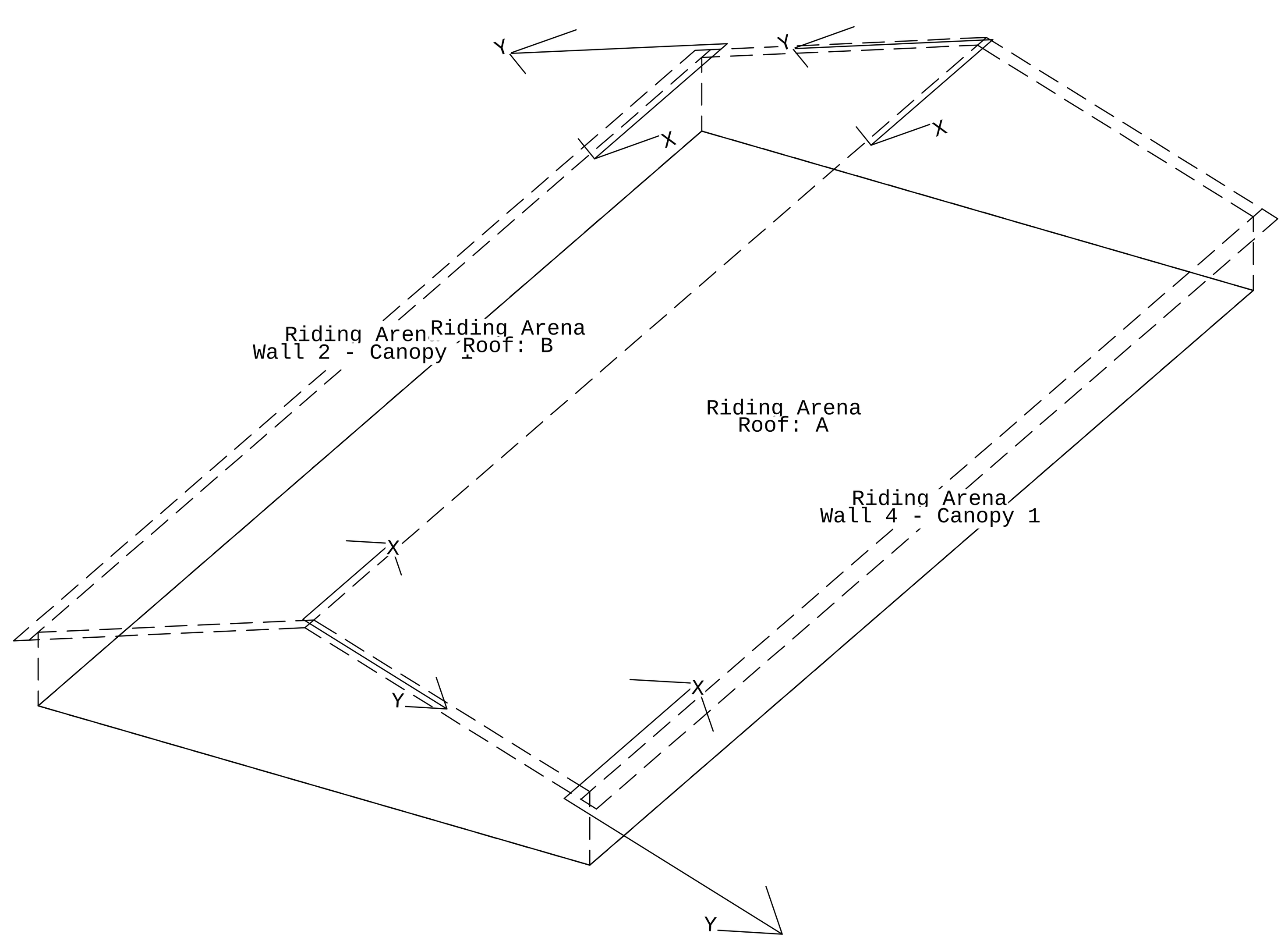

Snow Buildup

Shape	Surface	Description	X Location	Y Location	Magnitude
Riding Arena	Roof: A	SD due to cupola	34.2 ft	5.8 ft	83.3 psf
			34.2 ft	18.5 ft	0.0 psf
			45.8 ft	18.5 ft	0.0 psf
			45.8 ft	5.8 ft	83.3 psf
Riding Arena	Roof: A	SD due to cupola	119.2 ft	5.8 ft	83.3 psf
			119.2 ft	18.5 ft	0.0 psf
			130.8 ft	18.5 ft	0.0 psf
			130.8 ft	5.8 ft	83.3 psf
Riding Arena	Roof: A	SD due to cupola	204.2 ft	5.8 ft	83.3 psf
			204.2 ft	18.5 ft	0.0 psf
			215.8 ft	18.5 ft	0.0 psf
			215.8 ft	5.8 ft	83.3 psf
Riding Arena	Roof: A	SD due to cupola	34.2 ft	0.0 ft	83.3 psf
			34.2 ft	5.8 ft	83.3 psf
			21.5 ft	5.8 ft	0.0 psf
			21.5 ft	0.0 ft	0.0 psf
Riding Arena	Roof: A	SD due to cupola	119.2 ft	0.0 ft	83.3 psf
			119.2 ft	5.8 ft	83.3 psf
			106.5 ft	5.8 ft	0.0 psf
			106.5 ft	0.0 ft	0.0 psf
Riding Arena	Roof: A	SD due to cupola	204.2 ft	0.0 ft	83.3 psf
			204.2 ft	5.8 ft	83.3 psf
			191.5 ft	5.8 ft	0.0 psf
			191.5 ft	0.0 ft	0.0 psf
Riding Arena	Roof: A	SD due to cupola	45.8 ft	0.0 ft	83.3 psf
			45.8 ft	5.8 ft	83.3 psf
			58.5 ft	5.8 ft	0.0 psf
			58.5 ft	0.0 ft	0.0 psf
Riding Arena	Roof: A	SD due to cupola	130.8 ft	0.0 ft	83.3 psf
			130.8 ft	5.8 ft	83.3 psf
			143.5 ft	5.8 ft	0.0 psf
			143.5 ft	0.0 ft	0.0 psf
Riding Arena	Roof: A	SD due to cupola	215.8 ft	0.0 ft	83.3 psf
			215.8 ft	5.8 ft	83.3 psf
			228.5 ft	5.8 ft	0.0 psf
			228.5 ft	0.0 ft	0.0 psf
Riding Arena	Roof: A	Unbalanced Snow Counter Load	-3.4 ft	18.3 ft	59.7 psf
			-3.4 ft	0.0 ft	59.7 psf
			0.0 ft	0.0 ft	59.7 psf
			0.0 ft	18.3 ft	59.7 psf
Riding Arena	Roof: A	Unbalanced Snow Load	-7.0 ft	18.3 ft	59.7 psf
			-7.0 ft	0.0 ft	59.7 psf
			0.0 ft	0.0 ft	59.7 psf
			0.0 ft	18.3 ft	59.7 psf
Riding Arena	Roof: A	Unbalanced Snow Counter Load	250.0 ft	0.0 ft	59.7 psf
			250.0 ft	18.3 ft	59.7 psf
			253.4 ft	18.3 ft	59.7 psf
			253.4 ft	0.0 ft	59.7 psf
Riding Arena	Roof: A	Unbalanced Snow Load	250.0 ft	0.0 ft	59.7 psf
			250.0 ft	18.3 ft	59.7 psf
			257.0 ft	18.3 ft	59.7 psf
			257.0 ft	0.0 ft	59.7 psf
Riding Arena	Roof: A	Unbalanced Snow Load 1, Shifted Left : Roof: A	0.0 ft	0.0 ft	59.7 psf
			250.0 ft	0.0 ft	59.7 psf
			250.0 ft	18.3 ft	59.7 psf
			0.0 ft	18.3 ft	59.7 psf
Riding Arena	Roof: A	Unbalanced Snow Load 1, Shifted Left : Roof: A	-3.4 ft	18.3 ft	59.7 psf
			-3.4 ft	0.0 ft	59.7 psf
			0.0 ft	0.0 ft	59.7 psf
			0.0 ft	18.3 ft	59.7 psf
Riding Arena	Roof: A	Unbalanced Snow Load 1, Shifted Left : Roof: A	250.0 ft	0.0 ft	59.7 psf
			253.4 ft	0.0 ft	59.7 psf
			253.4 ft	18.3 ft	59.7 psf
			250.0 ft	18.3 ft	59.7 psf
Riding Arena	Roof: B	SD due to cupola	34.2 ft	5.8 ft	83.3 psf
			34.2 ft	17.4 ft	0.0 psf
			45.8 ft	17.4 ft	0.0 psf
			45.8 ft	5.8 ft	83.3 psf
Riding Arena	Roof: B	SD due to cupola	119.2 ft	5.8 ft	83.3 psf
			119.2 ft	17.4 ft	0.0 psf
			130.8 ft	17.4 ft	0.0 psf
			130.8 ft	5.8 ft	83.3 psf
Riding Arena	Roof: B	SD due to cupola	204.2 ft	5.8 ft	83.3 psf
			204.2 ft	17.4 ft	0.0 psf
			215.8 ft	17.4 ft	0.0 psf
			215.8 ft	5.8 ft	83.3 psf
Riding Arena	Roof: B	SD due to cupola	34.2 ft	0.0 ft	83.3 psf
			34.2 ft	5.8 ft	83.3 psf
			22.6 ft	5.8 ft	0.0 psf
			22.6 ft	0.0 ft	0.0 psf

COLORADO LICENSED PROFESSIONAL ENGINEER
0052792

REVIEWED FOR CODE COMPLIANCE 01/27/2022

09/10/2021

PERMIT SET- For Building Dept. Approval

MODIFIED IN AUTOCAD

THE VP ENGINEER'S SEAL APPLIES ONLY TO THE WORK PRODUCT OF VP AND DESIGN AND PERFORMANCE REQUIREMENTS SPECIFIED BY VP. THE VP ENGINEER'S SEAL DOES NOT APPLY TO THE PERFORMANCE OR DESIGN OF ANY OTHER PRODUCT OR COMPONENT FURNISHED BY VP EXCEPT TO ANY DESIGN OR PERFORMANCE REQUIREMENTS SPECIFIED BY VP.

THIS DRAWING, INCLUDING THE INFORMATION HEREON, REMAINS THE PROPERTY OF VP BUILDINGS. IT IS PROVIDED SOLELY FOR ERECTING THE BUILDING DESCRIBED IN THE APPLICABLE PURCHASE ORDER AND MAY BE REPRODUCED ONLY FOR THAT PURPOSE. IT SHALL NOT BE MODIFIED, REPRODUCED OR USED FOR ANY OTHER PURPOSE WITHOUT PRIOR WRITTEN APPROVAL OF VP BUILDINGS.

THE GENERAL CONTRACTOR AND/OR ERECTOR IS SOLELY RESPONSIBLE FOR ACCURATE GOOD QUALITY WORKMANSHIP IN ERECTING THIS BUILDING IN ACCORDANCE WITH THIS DRAWING, DETAILS REFERENCED IN THIS DRAWING, ALL APPLICABLE VP BUILDINGS ERECTION GUIDES, AND INDUSTRY STANDARDS PERTAINING TO PROPER ERECTION, INCLUDING THE CORRECT USE OF TEMPORARY BRACING.

D

VP Buildings
3200 Players Club Circle Memphis TN 38125

REV	DATE	BY	DESCRIPTION

NTS

CODES AND LOADS

BUILDER: Rule Steel
CUSTOMER:
LOCATION: Clark, Colorado
PROJECT: DC Riding Arena
BUILDERS PO#:

VP BUILDINGS
VARCO PRUDEN
A BlueScope Steel Company
VPC VERSION: 2021.2b

JOBNO: 21-007748-01
DATE: 09/08/2021
DRAWN/CHECK: KJI KJI
PAGE: 2

FILENAME: C:\janani\ard\21-007748-01_ard(09-08-2021)\ard\DC Riding Arena Option 2_CODES AND LOADS.dwg
SAVE DATE: 9/8/2021 SAVE TIME: 14:57:15 LAST SAVED BY: jkanagaraj

a division of BlueScope Buildings North America, Inc.

Riding Arena	Roof: B	SD due to cupola	119.2 ft	0.0 ft	83.3 psf
			119.2 ft	5.8 ft	83.3 psf
			107.6 ft	5.8 ft	0.0 psf
			107.6 ft	0.0 ft	0.0 psf
Riding Arena	Roof: B	SD due to cupola	204.2 ft	0.0 ft	83.3 psf
			204.2 ft	5.8 ft	83.3 psf
			192.6 ft	5.8 ft	0.0 psf
			192.6 ft	0.0 ft	0.0 psf
Riding Arena	Roof: B	SD due to cupola	45.8 ft	0.0 ft	83.3 psf
			45.8 ft	5.8 ft	83.3 psf
			57.4 ft	5.8 ft	0.0 psf
			57.4 ft	0.0 ft	0.0 psf
Riding Arena	Roof: B	SD due to cupola	130.8 ft	0.0 ft	83.3 psf
			130.8 ft	5.8 ft	83.3 psf
			142.4 ft	5.8 ft	0.0 psf
			142.4 ft	0.0 ft	0.0 psf
Riding Arena	Roof: B	SD due to cupola	215.8 ft	0.0 ft	83.3 psf
			215.8 ft	5.8 ft	83.3 psf
			227.4 ft	5.8 ft	0.0 psf
			227.4 ft	0.0 ft	0.0 psf
Riding Arena	Roof: B	Unbalanced Snow Counter Load	250.0 ft	0.0 ft	59.7 psf
			250.0 ft	18.3 ft	59.7 psf
			253.4 ft	18.3 ft	59.7 psf
			253.4 ft	0.0 ft	59.7 psf
Riding Arena	Roof: B	Unbalanced Snow Counter Load	-3.4 ft	18.3 ft	59.7 psf
			-3.4 ft	0.0 ft	59.7 psf
			0.0 ft	0.0 ft	59.7 psf
			0.0 ft	18.3 ft	59.7 psf
Riding Arena	Roof: B	Unbalanced Snow Load	250.0 ft	0.0 ft	59.7 psf
			250.0 ft	18.3 ft	59.7 psf
			257.0 ft	18.3 ft	59.7 psf
			257.0 ft	0.0 ft	59.7 psf
Riding Arena	Roof: B	Unbalanced Snow Load	-7.0 ft	18.3 ft	59.7 psf
			-7.0 ft	0.0 ft	59.7 psf
			0.0 ft	0.0 ft	59.7 psf
			0.0 ft	18.3 ft	59.7 psf
Riding Arena	Roof: B	Unbalanced Snow Load 1, Shifted Right : Roof: B	0.0 ft	0.0 ft	59.7 psf
			250.0 ft	0.0 ft	59.7 psf
			250.0 ft	18.3 ft	59.7 psf
			0.0 ft	18.3 ft	59.7 psf
Riding Arena	Roof: B	Unbalanced Snow Load 1, Shifted Right : Roof: B	250.0 ft	0.0 ft	59.7 psf
			253.4 ft	0.0 ft	59.7 psf
			253.4 ft	18.3 ft	59.7 psf
			250.0 ft	18.3 ft	59.7 psf
Riding Arena	Roof: B	Unbalanced Snow Load 1, Shifted Right : Roof: B	-3.4 ft	18.3 ft	59.7 psf
			-3.4 ft	0.0 ft	59.7 psf
			0.0 ft	0.0 ft	59.7 psf
			0.0 ft	18.3 ft	59.7 psf

1. The Snow Buildup loading shown is in addition to the flat or sloped roof snow.
2. The X and Y Location dimensions are from the point of origin of each surface.

REVIEWED FOR CODE COMPLIANCE
01/27/2022

COLORADO LICENSED PROFESSIONAL ENGINEER
MANUEL M. WEBBER
0052792

09/10/2021

PERMIT SET- For Building Dept. Approval

MODIFIED IN AUTOCAD

THE VP ENGINEER'S SEAL APPLIES ONLY TO THE WORK PRODUCT OF VP AND DESIGN AND PERFORMANCE REQUIREMENTS SPECIFIED BY VP. THE VP ENGINEER'S SEAL DOES NOT APPLY TO THE PERFORMANCE OR DESIGN OF ANY OTHER PRODUCT OR COMPONENT FURNISHED BY VP EXCEPT TO ANY DESIGN OR PERFORMANCE REQUIREMENTS SPECIFIED BY VP.

THIS DRAWING, INCLUDING THE INFORMATION HEREON, REMAINS THE PROPERTY OF VP BUILDINGS. IT IS PROVIDED SOLELY FOR ERECTING THE BUILDING DESCRIBED IN THE APPLICABLE PURCHASE ORDER AND MAY BE REPRODUCED ONLY FOR THAT PURPOSE. IT SHALL NOT BE MODIFIED, REPRODUCED OR USED FOR ANY OTHER PURPOSE WITHOUT PRIOR WRITTEN APPROVAL OF VP BUILDINGS.

THE GENERAL CONTRACTOR AND/OR ERECTOR IS SOLELY RESPONSIBLE FOR ACCURATE GOOD QUALITY WORKMANSHIP IN ERECTING THIS BUILDING IN ACCORDANCE WITH THIS DRAWING, DETAILS REFERENCED IN THIS DRAWING, ALL APPLICABLE VP BUILDINGS ERECTION GUIDES, AND INDUSTRY STANDARDS PERTAINING TO PROPER ERECTION, INCLUDING THE CORRECT USE OF TEMPORARY BRACING.

D

VP Buildings
3200 Players Club Circle Memphis TN 38125

REV	DATE	BY	DESCRIPTION

NTS

CODES AND LOADS

BUILDER: Rule Steel
CUSTOMER:
LOCATION: Clark, Colorado
PROJECT: DC Riding Arena
BUILDERS PO#:

VP BUILDINGS
VARCO PRUDEN
A BlueScope Steel Company
VPC VERSION: 2021.2b

JOBNO: 21-007748-01
DATE: 09/08/2021
DRAWN/CHECK: KJI KJI
PAGE: 3

FILENAME: C:\janani\ard\21-007748-01_ard(09-08-2021)\ard\DC Riding Arena Option 2_CODES AND LOADS - Copy.dwg
SAVE DATE: 9/8/2021 SAVE TIME: 14:56:34 LAST SAVED BY: jkanagaraj

a division of BlueScope Buildings North America, Inc.

BUILDER/CONTRACTOR RESPONSIBILITIES

VP Buildings follows the guidelines as outlined in the AISC and MBMA Codes of Standard Practice. VP Buildings standard product specifications, design, fabrication, quality criteria shall govern all work unless stipulated otherwise in the contract documents. In case of discrepancies between VP Buildings structural plans and plans for other trades, VP Buildings structural plans shall govern.

It is the responsibility of the Builder to obtain approvals and permits from all governing agencies and jurisdictions as required. Approval of VP Buildings drawings constitutes the builders acceptance of VP interpretation of the contract purchase order. Unless specific design criteria concerning interface design and details are furnished as part of the contract, VP Buildings design assumptions shall govern.

VP engineers are not Project Engineers or Engineer of Record for the overall project. VP engineering supply sealed engineering design data and drawings for VP supplied material as part of the overall project for use by others to obtain permits, approvals, and coordinate with other trades. All interface and/or compatibility of any materials not furnished by VP are to be considered and coordinated by the builder or A/E firm.

CONSTRUCTION & ERECTION RESPONSIBILITY

The Builder is responsible for construction in strict accordance with VP Buildings "FOR CONSTRUCTION" drawings and all applicable product installation guides. VP is not responsible for work done from any other VP drawings that are not marked "FOR CONSTRUCTION", nor any drawings prepared by others.

As erected field assemblies of members shall be as specified in MBMA Code of Standard Practice (in Canada - CSA S16), which require L/500 tolerance of installed members. Occasional field work including shimming, cutting, coping, and drilling for final fit-up are considered part of erection. Specified field work and field welding conditions indicated on these drawings shall also be included in the erectors scope of work. See Erection Guide for shimming procedure. For building with top riding bridge cranes see Crane Data drawing for column plumb tolerance.

The building erector shall be properly licensed and experienced in erecting metal building systems. The Builder is responsible for having knowledge of, and shall comply with, all OSHA requirements and all other governing site safety criteria. The builder is responsible for designing, supplying, locating and installing temporary supports and bracing during erection of the building. VP bracing is designed for code required loads after building completion and shall not be considered as adequate erection bracing. See Erection Guide.

Shimming of steel buildings during erection may be required to accomodate allowable tolerances during fabrication and erection. Special care should be taken by the building erector to shim connections where key dimensions must be maintained for building performance as even small tolerances can have a significant impact on critical dimensions such as height, clearances and plumbness, especially as the size of the member or building increases. Conditions where shimming should be expected can include but are not limited to large door openings, critical clear height requirements, cranes, buildings greater than 45 feet in height, clear spans greater than 125 feet and adjacent frames with different characteristics (like clear span frames adjacent to an endwall or modular frame). Shims are normally provided by the erector, but may be ordered upon request by contacting your Project Manager.

EXISTING STRUCTURES

VP must be advised of any structure that is within 20 ft. of VP's building. Load effects from snow drifting, wind effects, and seismic separation must be considered for both the new and existing structures. VP has designed the new VP building for these effects. The owner/builder are responsible for employing a Professional Engineer to review and verify the existing structure for all load effects from the adjacent VP building.

BRACING

Tension brace rods work in pairs to balance forces caused by initial tensioning. Care must be taken while tightening brace rods so as not to cause accidental or misalignment of components. All rods must be installed loose and then tightened. Rods should not exhibit excessive sag. For long or heavy rods, or angles it may be necessary to support the rods at mid-bay by suspending them from secondary members.

Bracing for seismic or wind loading of objects or equipment that are not a part of the VP structure must be designed by a qualified professional to deliver lateral loads to primary frames and rod bracing struts. Equipment bracing and suspension connections must not impose torsion or minor axis loads, or cause local distortion in any VP components. VP accepts no responsibility for design or installation of bracing systems not furnished by VP.

FIELD WELDING

All field welding shall be done at the direction of a design professional, and done in accordance with governing requirements (AWS in USA, CWB in Canada) by welders qualified to perform the welding as directed by the applicable welding procedure specification (WPS). A WPS shall be prepared by the contractor for each welding variation specified. The contractor is responsible for any special welding inspection as required by local jurisdiction. Filler metal shall be 70 ksi (480 MPa) tensile strength. For welds in high seismic force resisting system (Seismic Cat D, E or F), minimum Charpy V-Notch toughness shall meet AISC-341 criteria (20 ft-lbs min @ 0Deg F). Interpass temperatures shall not exceed 550Deg F (300Deg C).

DELIVERIES

It is the responsibility of the builder to have adequate equipment available at the job site to unload trucks in a safe and timely manner. The Builder will be responsible for all retention charges from carriers as a result of job site unloading delays.

SIGNAGE

The Builder is responsible for furnishing signs as required by Code and the Building Department, including but not limited to, exits, occupancy limits, floor loading limits, and bulk storage limits. Floor loading signs shall clearly indicate maximum floor live load permitted.
Bulk storage facilities shall have signs clearly posted on all loaded walls indicating the type of commodity stored and the maximum storage height. Signs shall be clearly visible when building is fully loaded to design level. Overloading of floors or walls may result in failure.

Claims for damage or shorts MUST be noted on the Bill-of-Lading or delivery receipt and filed against the carrier by the consignee as per VP's Terms of Sales (F.O.B. Plant) under the Uniform Commercial Code. It is critical that damages or shorts be noted on the Bill-of-Lading or you have little recourse with the carrier. Immediately upon delivery of material, material quantities are verified by the Builder against quantities billed on the shipping document. Neither the Manufacturer nor the carrier is responsible for material shortages against quantities billed on the shipping document if such shortages are not noted on the shipping documents upon delivery of material and acknowledged by the carriers agent. For materials concealed in bundles, boxes, or crates, shortages must be reported immediately upon unpacking. Should products get wet, bundled and crated materials must be unpacked and unbundled immediately to provide drainage of trapped moisture. See Erection Guide for proper job site storage procedure.

SEALANTS

Sealants shall be applied in strict accordance with VP details or weather tightness will be compromised. Sealant must be applied in temperatures and weather conditions consistent with labeling.

INDEPENDENT MEZZANINES

Independent mezzanines must be designed by a professional engineer. The engineer must ensure that proper isolation from the VP building has been provided to avoid structural damage due to differential movements, or inadvertently apply loads to the VP structure. VP accepts no responsibility for the design of the independent mezzanine.

FIRE CODE COMPLIANCE

It is the responsibility of the project design professional and builder to comply with local fire code regulations including consideration of, but not limited to, building use and occupancy, all building construction materials, separation requirements, egress requirements, fire protection systems, etc. Builder shall advise VP of any special requirements to be furnished by VP.

FIELD MODIFICATIONS

Modifications to this building from details and instructions contained on these drawings must be approved in writing by VP Buildings engineers, or other licensed structural engineer. This includes, but is not limited to, removal of roof or wall cladding, removing or moving any flange braces or rod braces, cutting of openings for doors, windows or RTU's, correction of fabrication errors, etc. The owner shall not impose loads to this structure beyond what is specified for this building in the contract documents. VP Buildings accepts no responsibility for the consequences of any unauthorized additions, alterations, or added loads to this structure.

If the builder intends to invoice VP Buildings for modifications in excess of $1000, The builder must notify VP Buildings immediately, and obtain a Work Authorization from VP Buildings prior to proceeding. All final claims must be submitted to VP Buildings with all supporting documentation within 30 days of the building completion. Claims submitted without work authorizations, or after 30 days will not be accepted. Correction of minor misfits, shimming and plumbing, moderate amount of reaming, drilling, chipping / cutting and minor welding are considered by Code of Standard Practice to be part of erection are not subject to claim reimbursement.

CONCRETE/MASONRY/CONVENTIONAL STUD WALLS

The engineer responsible for the design of the wall system is responsible for coordinating with, or specifying to VP Buildings, any wall to steel compatibility issues such as drift and deflection compatibility, special base details, and wall to VP steel connections. All fasteners, sealant and counter flashing of wall systems are to be provided by contractor. The engineer responsible for the wall shall design the anchorage to VP supporting elements consistent with Code required forces.

PANELS

Oil canning is an inherent characteristic of cold formed steel panels. It is the result of several factors that include induced stresses in the raw material delivered to VP, fabrication methods, installation procedures, and post installation thermal forces. Thru fastened panels will exhibit some dimpling when installed, especially when insulation is installed between panels and secondary supports. Dimpling can be minimized by careful installation, taking care not to over drive fasteners.

Roof rumble is a phenomenon that is caused by wind gusts lifting up on the roof panels and then springing back into place. All panels experience this action to some degree, especially with concealed clip Standing Seam panels. Roof rumble noise may be minimized by providing a layer of blanket insulation between the panels and any hard support surface such as steel secondary members, substrates such as plywood, steel decking, or rigid board insulation. A minimum of 3 inch thick blanket is recommended over steel secondary members, or 2 inch over substrates.

Oil canning, dimpling, and roof rumble do not affect the structural integrity or weather tightness of the panels and is not grounds for rejection of panels.

The Standing Seam joint detail is designed with an interlocking feature for ease of installation. However, it is imperative that installed Standing Seam panels be secured to the secondary structural members and properly seamed prior to departure from the job site each day.

SKYLIGHTS

Local building departments may require added fall restraint due to conditions that may affect the skylight structural integrity. It is the responsibility of the builder to determine and provide any added fall restraint under the skylight as may be required by your building department.

RAIN WATER RUNOFF

Drainage systems must be designed by the project professional to comply with code requirements. VP is not responsible for drainage designs, overflow scuppers, down piping, etc. The project professional and contractor are responsible to ensure that primary drains and overflow devices such as scuppers and auxiliary drains are provided as required for the required rain intensity at the building perimeter and at valley conditions to prevent ponding.

STEEL SHOP COAT

The purpose of VP's shop coat is to provide protection for the steel members during transportation, during temporary job site storage and during erection. Standard shop formulation is not designed to perform as a finish coat when exposed to environmental conditions. Members shall be kept free of the ground and properly drained during job site storage. It is the Builder's responsibility to ensure that if a finish coat is being applied over VP shop coat that the painting contractor verifies compatibility between his finish coat and VP's shop coat.

VP BUILDINGS ACCREDITATIONS AND APPROVALS

Fabricator Approvals

IAS AC472 Approvals: (www.iasonline.org/services/metal-building-inspection)
Listed under BlueScope Buildings North America, Inc.
City of Los Angeles, CA #FB00031; City of Houston, TX 767 & 429;
City of Phoenix, AZ C19-02008; Clark County, NV 43 & 833, San Bernardino County, CA 289
State of Utah, City of Richmond, CA.

Design Approvals

IAS AC472 Approvals: (www.iasonline.org/services/metal-building-inspection)
Listed under Varco Pruden Buildings, a Division of BlueScope Buildings North America, Inc.

Canadian CSA A660 Certifications

(www.cwbgroup.org)
Listed under BlueScope Buildings North America, Inc.

Engineering Certifications of Authorization

USA--AR#576; FL#30427; ID#C-2470; IL#184-002649; KS#E-29; MS#E-0592;
MO#E-2010007736; NC#F-0998; OK#CA4170PE; SD#C-1787; TX#F4828; WV#C03059-00;
CAN--AB#P08900; NS#30123; ON#100148796; and YT#PP134

ICC Evaluation Reports (www.icc-es.org)

SSR Roof System - #ESR-2527

State of Florida Product Approvals (www.floridabuilding.org)

Approved Products Listed Under VP Buildings, Inc.

VP TextureClad - See Transamerican Structuroc, Inc.

Dade Co. Product Approval (www.miamidade.gov/buildingcode)

Approved Products Listed Under Varco Pruden Buildings, Inc.

VP TextureClad - See Transamerican Structuroc, Inc.

Underwriter's Laboratory Approvals (Available only when specified in contract)

SSR Roof-UL#TGKX-113; SSR Composite Roof Class 90-UL#TGKX-113A;

SSR Roof w/Super Block; Class 90-UL#TGKX-328;

Panel Rib Roof UL Class 60-UL#TGKX-60; Panel Rib Roof UL Class 90-UL#TGKX-64;

VP SLR II Roof Class 90-UL#TGKX-90, -180, -435, -435A, -176, -238, -238A, -238B

Factory Mutual Approved Assemblies (Available only when specified in contract)

SSR Roof Systems are approved in various type applications and listed in FM Approval Guide.

24 Ga SSR (0.0227" Nominal), is available in Class 1-60, 1-75, 1-90. 22Ga SSR (0.0277" Nominal), is available in Class 1-75, 1-90-, 1-120.

SLR II Roof Systems are approved in various type applications and listed in FM Approval Guide.

24 Ga SLR II (0.0227" Nominal), is available in Class 1-75 and 1-120.

REVIEWED FOR CODE COMPLIANCE
01/27/2022

COLORADO LICENSED
EMANUEL M. HIBBARD
0052792
PROFESSIONAL ENGINEER

09/10/2021

PERMIT SET- For Building Dept. Approval

THE VP ENGINEER'S SEAL APPLIES ONLY TO THE WORK PRODUCT OF VP AND DESIGN AND PERFORMANCE REQUIREMENTS SPECIFIED BY VP. THE VP ENGINEER'S SEAL DOES NOT APPLY TO THE PERFORMANCE OR DESIGN OF ANY OTHER PRODUCT OR COMPONENT FURNISHED BY VP EXCEPT TO ANY DESIGN OR PERFORMANCE REQUIREMENTS SPECIFIED BY VP.

THIS DRAWING, INCLUDING THE INFORMATION HEREON, REMAINS THE PROPERTY OF VP BUILDINGS. IT IS PROVIDED SOLELY FOR ERECTING THE BUILDING DESCRIBED IN THE APPLICABLE PURCHASE ORDER AND MAY BE REPRODUCED ONLY FOR THAT PURPOSE. IT SHALL NOT BE MODIFIED, REPRODUCED OR USED FOR ANY OTHER PURPOSE WITHOUT PRIOR WRITTEN APPROVAL OF VP BUILDINGS.

THE GENERAL CONTRACTOR AND/OR ERECTOR IS SOLELY RESPONSIBLE FOR ACCURATE GOOD QUALITY WORKMANSHIP IN ERECTING THIS BUILDING IN ACCORDANCE WITH THIS DRAWING, DETAILS REFERENCED IN THIS DRAWING, ALL APPLICABLE VP BUILDINGS ERECTION GUIDES, AND INDUSTRY STANDARDS PERTAINING TO PROPER ERECTION, INCLUDING THE CORRECT USE OF TEMPORARY BRACING.

D

VP Buildings
3200 Players Club Circle Memphis TN 38125

REV	DATE	BY	DESCRIPTION

NTS

9/8/2021 12:32:14

ERECTION NOTES

BUILDER	Rule Steel
CUSTOMER	
LOCATION	Clark, Colorado
PROJECT	DC Riding Arena
BUILDERS PO#	
FILENAME:	DC Riding Arena Option 2

VP BUILDINGS
VARCO PRUDEN
A BlueScope Steel Company
VPC VERSION: 2021.2a

a division of BlueScope Buildings North America, Inc.

JOBNO	21-007748-01
DATE	09/08/2021
DRAWN/CHECK	KJI KJI
PAGE	4

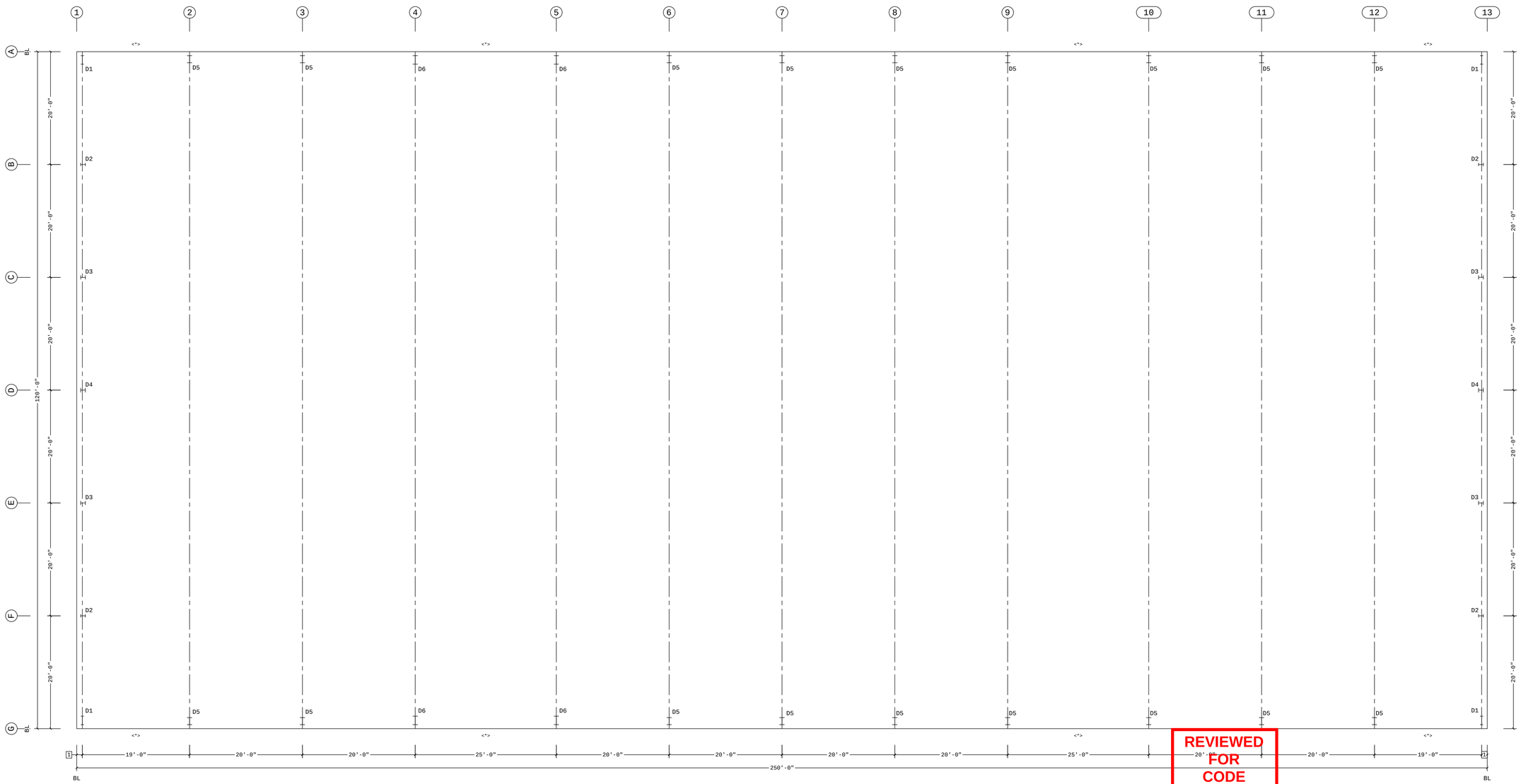

ANCHOR ROD PLAN

REVIEWED FOR CODE COMPLIANCE 01/27/2022

COLORADO LICENSED AMMIEL M. HUNTER 0052792 PROFESSIONAL ENGINEER

09/10/2021

1 1'-0"
Dimension Key

Finished Floor Elevation = 100'-0" (Unless Noted Otherwise)

PERMIT SET- For Building Dept. Approval

<*> THE BUILDING IS DESIGNED WITH BRACING DIAGONALS IN THE DESIGNATED BAYS. COLUMN BASE REACTIONS, BASE PLATES AND ANCHOR RODS ARE AFFECTED BY THIS BRACING AND DIAGONALS MAY NOT BE RELOCATED WITHOUT CONSULTING THE BUILDING SUPPLIERS ENGINEER.

THE VP ENGINEER'S SEAL APPLIES ONLY TO THE WORK PRODUCT OF VP AND DESIGN AND PERFORMANCE REQUIREMENTS SPECIFIED BY VP. THE VP ENGINEER'S SEAL DOES NOT APPLY TO THE PERFORMANCE OR DESIGN OF ANY OTHER PRODUCT OR COMPONENT FURNISHED BY VP EXCEPT TO ANY DESIGN OR PERFORMANCE REQUIREMENTS SPECIFIED BY VP.

THIS DRAWING, INCLUDING THE INFORMATION HEREON, REMAINS THE PROPERTY OF VP BUILDINGS. IT IS PROVIDED SOLELY FOR ERECTING THE BUILDING DESCRIBED IN THE APPLICABLE PURCHASE ORDER AND MAY BE REPRODUCED ONLY FOR THAT PURPOSE. IT SHALL NOT BE MODIFIED, REPRODUCED OR USED FOR ANY OTHER PURPOSE WITHOUT PRIOR WRITTEN APPROVAL OF VP BUILDINGS.

THE GENERAL CONTRACTOR AND/OR ERECTOR IS SOLELY RESPONSIBLE FOR ACCURATE GOOD QUALITY WORKMANSHIP IN ERECTING THIS BUILDING IN ACCORDANCE WITH THIS DRAWING, DETAILS REFERENCED IN THIS DRAWING, ALL APPLICABLE VP BUILDINGS ERECTION GUIDES, AND INDUSTRY STANDARDS PERTAINING TO PROPER ERECTION, INCLUDING THE CORRECT USE OF TEMPORARY BRACING.

D

VP Buildings
3200 Players Club Circle Memphis TN 38125

REV	DATE	BY	DESCRIPTION

NTS

ANCHOR ROD PLAN

BUILDER	Rule Steel
CUSTOMER	
LOCATION	Clark, Colorado
PROJECT	DC Riding Arena
BUILDERS PO#	

VP BUILDINGS
VARCO PRUDEN
A BlueScope Steel Company
VPC VERSION: **2021.2a**

JOBNO	21-007748-01
DATE	09/08/2021
DRAWN/CHECK	KJI KJI
PAGE	5

MODIFIED IN AUTOCAD

FILENAME: **C:\janani\ard\21-007748-01_ard(09-08-2021)\ard\DC Riding Arena Option 2_ANCHOR ROD PLAN.dwg**

SAVE DATE: 9/8/2021 SAVE TIME: 14:44:04 LAST SAVED BY: jkanagaraj

a division of BlueScope Buildings North America, Inc.

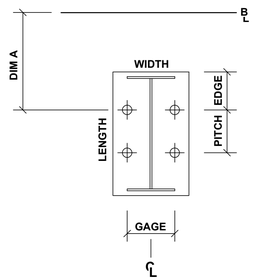

D1 (4)1" Dia. GR36 Anchor Rods
Plate W=8" L=1'-7"
Dim: A=1'-3"
Gage=5" Pitch=5" Edge Out=7"
Elev.=100'-0"

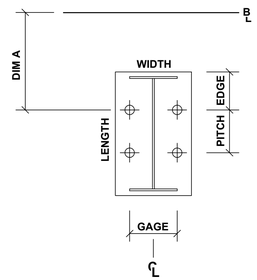

D2 (4)3/4" Dia. GR36 Anchor Rods
Plate W=8" L=11"
Dim: A=11"
Gage=5" Pitch=5" Edge Out=3"
Elev.=100'-0"

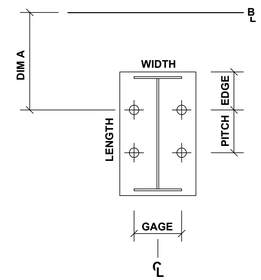

D3 (4)3/4" Dia. GR36 Anchor Rods
Plate W=9" L=11"
Dim: A=11"
Gage=5" Pitch=5" Edge Out=3"
Elev.=100'-0"

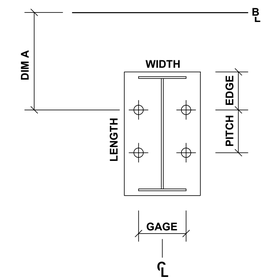

D4 (4)3/4" Dia. GR36 Anchor Rods
Plate W=10" L=11"
Dim: A=11"
Gage=5" Pitch=5" Edge Out=3"
Elev.=100'-0"

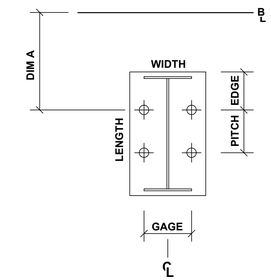

D5 (4)2" Dia. GR36 Anchor Rods
Plate W=1'-2" L=1'-4"
Dim: A=1'-0"
Gage=8" Pitch=8" Edge Out=4"
Elev.=100'-0"

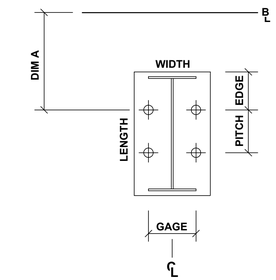

D6 (4)2" Dia. GR36 Anchor Rods
Plate W=1'-2" L=1'-7"
Dim: A=1'-0"
Gage=8" Pitch=8" Edge Out=4"
Elev.=100'-0"

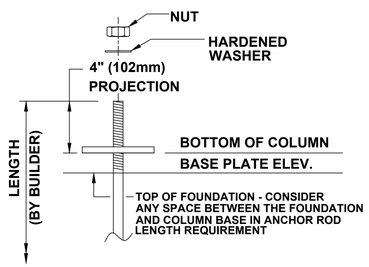

THE 4" PROJECTION ABOVE THE BOTTOM OF THE BASE PLATE IS A SUGGESTED MINIMUM TO ENSURE ADEQUATE ANCHOR ROD LENGTH. A DIFFERENT PROJECTION MAY BE REQUIRED BY THE FOUNDATION DESIGNER.

THE ANCHOR ROD PROJECTION MAY NEED TO BE CUT OFF IF THERE IS INTERFERENCE WITH OTHER PARTS.

SUGGESTED ANCHOR ROD PROJECTION

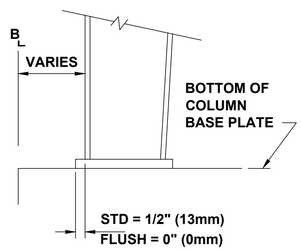

TYPICAL COLUMN BASE PLATE DETAIL

1. **ANCHOR RODS, NUTS, HARDENED WASHERS AND ANY OTHER EMBEDDED ITEMS ARE TO BE FURNISHED BY CONTRACTOR.**
2. **ANCHOR ROD DIAMETERS WERE DETERMINED BY ALLOWABLE SHEAR AND TENSION PER AISC SPECIFICATIONS (FY=36KSI). (ASTM F1554 GRADE 36) ANCHOR ROD LENGTH, EFFECTS OF EMBEDDED ANCHOR ROD EDGE DIMENSIONS AND METHOD OF TRANSFERRING FORCES FROM ANCHOR RODS TO FOOTINGS ARE TO BE DETERMINED BY OTHERS.**
3. **UNLESS OTHERWISE SPECIFIED, ANCHOR RODS ARE DESIGNED AND DETAILED AS "CAST-IN-PLACE" ANCHOR RODS WITH "SNUG TIGHT" CONNECTIONS.**
4. **FOUNDATION MUST BE LEVEL, SQUARE AND SMOOTH. ANCHOR RODS MUST BE ACCURATELY PLACED AS SHOWN ON THIS DRAWING OR STEEL WILL NOT FIT. THE BUILDER IS RESPONSIBLE FOR ACCURATE SETTING OF ANCHOR RODS PER AISC CODE OF STANDARD PRACTICE, SEC 7.5 VARIATIONS ARE SUMMARIZED BELOW;**
   - **a. CENTERS OF ANY TWO AR'S WITHIN A COLUMN BASE GROUP; +-1/8"**
   - **b. CENTERS OF ADJACENT AR GROUPS; +-1/4"**
   - **c. TOPS OF AR'S; +-1/2"**
   - **d. ACCUMULATED DIM BETWEEN CENTERS OF AR GROUPS ALONG COLUMN LINE; +-1/4" PER 100FT., NOT TO EXCEED 1" TOTAL.**
   - **e. DIM FROM CENTER OF ANY AR GROUP FROM COLUMN LINE: +-1/4".**
5. **DESIGN LOADS AND REACTIONS ARE FURNISHED IN THE REACTIONS REPORT.**

Provide copy of Reactions Report

REVIEWED FOR CODE COMPLIANCE
01/27/2022

COLORADO LICENSED
EMANUEL M. KIBBEY
0052792
PROFESSIONAL ENGINEER

09/10/2021

Finished Floor Elevation = 100'-0" (Unless Noted Otherwise)

PERMIT SET- For Building Dept. Approval

<*> THE BUILDING IS DESIGNED WITH BRACING DIAGONALS IN THE DESIGNATED BAYS. COLUMN BASE REACTIONS, BASE PLATES AND ANCHOR RODS ARE AFFECTED BY THIS BRACING AND DIAGONALS MAY NOT BE RELOCATED WITHOUT CONSULTING THE BUILDING SUPPLIERS ENGINEER.

THE VP ENGINEER'S SEAL APPLIES ONLY TO THE WORK PRODUCT OF VP AND DESIGN AND PERFORMANCE REQUIREMENTS SPECIFIED BY VP. THE VP ENGINEER'S SEAL DOES NOT APPLY TO THE PERFORMANCE OR DESIGN OF ANY OTHER PRODUCT OR COMPONENT FURNISHED BY VP EXCEPT TO ANY DESIGN OR PERFORMANCE REQUIREMENTS SPECIFIED BY VP.

THIS DRAWING, INCLUDING THE INFORMATION HEREON, REMAINS THE PROPERTY OF VP BUILDINGS. IT IS PROVIDED SOLELY FOR ERECTING THE BUILDING DESCRIBED IN THE APPLICABLE PURCHASE ORDER AND MAY BE REPRODUCED ONLY FOR THAT PURPOSE. IT SHALL NOT BE MODIFIED, REPRODUCED OR USED FOR ANY OTHER PURPOSE WITHOUT PRIOR WRITTEN APPROVAL OF VP BUILDINGS.

THE GENERAL CONTRACTOR AND/OR ERECTOR IS SOLELY RESPONSIBLE FOR ACCURATE GOOD QUALITY WORKMANSHIP IN ERECTING THIS BUILDING IN ACCORDANCE WITH THIS DRAWING, DETAILS REFERENCED IN THIS DRAWING, ALL APPLICABLE VP BUILDINGS ERECTION GUIDES, AND INDUSTRY STANDARDS PERTAINING TO PROPER ERECTION, INCLUDING THE CORRECT USE OF TEMPORARY BRACING.

D

VP Buildings
3200 Players Club Circle Memphis TN 38125

REV	DATE	BY	DESCRIPTION

NTS

ANCHOR ROD PLAN - DETAILS

BUILDER	Rule Steel
CUSTOMER	
LOCATION	Clark, Colorado
PROJECT	DC Riding Arena
BUILDERS PO#	

VP BUILDINGS
VARCO PRUDEN
A BlueScope Steel Company
VPC VERSION: 2021.2a

JOBNO	21-007748-01
DATE	09/08/2021
DRAWN/CHECK	KJI KJI
PAGE	6

MODIFIED IN AUTOCAD

FILENAME: C:\janani\ard\21-007748-01_ard(09-08-2021)\ard\DC Riding Arena Option 2_ANCHOR ROD PLAN - DETAILS.dwg
SAVE DATE: 9/8/2021 SAVE TIME: 14:27:37 LAST SAVED BY: jkanagaraj

a division of BlueScope Buildings North America, Inc.

Bracing Part Schedule

Part	Qty	Length	Detail
04RS2801	4	28'-1"	BR01G2
04RS2800	4	28'-0"	BR01G2
3BSA1710714	12	18'-4 7/8"	BR15L1
06RS2505	8	25'-5"	BR01G2
06RS2006	8	20'-6"	BR01G2
07RS2602	4	26'-2"	BR01G2
07RS2511	4	25'-11"	BR01G2
04RS3206	8	32'-6"	BR01G2

Bracing Part Schedule

Part	Qty	Length	Detail
3BSA2310514	2	24'-4 5/8"	BR15L1
06RS3003	8	30'-3"	BR01G2
3BSA2310411	1	24'-4 1/2"	BR15L1
06RS2604	8	26'-4"	BR01G2
10RU3002	4	30'-2"	BR02K1
3BSA2310614	2	24'-4 3/4"	BR15L1
3BSA2310611	2	24'-4 3/4"	BR15L1
5BSE2300611	2	23'-6 3/4"	BR15L1

Bracing Part Schedule

Part	Qty	Length	Detail
10RU3003	4	30'-3"	BR02K1
3BSA2310511	1	24'-4 5/8"	BR15L1

Bracing Member Schedule

Id	Part	Description	Length	Vert. Clear
	SBX001	3P 8" x 1/4" flg - 0.1345" x 12" web	18'-10 3/4"	
	SBX002	3P 8" x 1/4" flg - 0.1345" x 9" web	24'-0 9/16"	
	SBX003	3P 8" x 3/8" flg - 3/16" x 9" web	24'-10 5/8"	
	SBX004	3P 8" x 1/4" flg - 0.1345" x 12" web	18'-10 3/4"	
	SBX005	3P 8" x 1/4" flg - 0.1345" x 9" web	24'-0 5/8"	

Rod, Strut, and Misc. Connection Bolts

Id	Qty	Grade	Bolt Diam.	Bolt Length	PartNo
1	2	A325	3/4"	2 1/2"	0097284
2	6	A325	3/4"	2 1/2"	0097284
3	4	A325	3/4"	2 1/2"	0097284
4	4	A325	7/8"	3 1/2"	0097380
5	2	A325	7/8"	3 1/2"	0097380

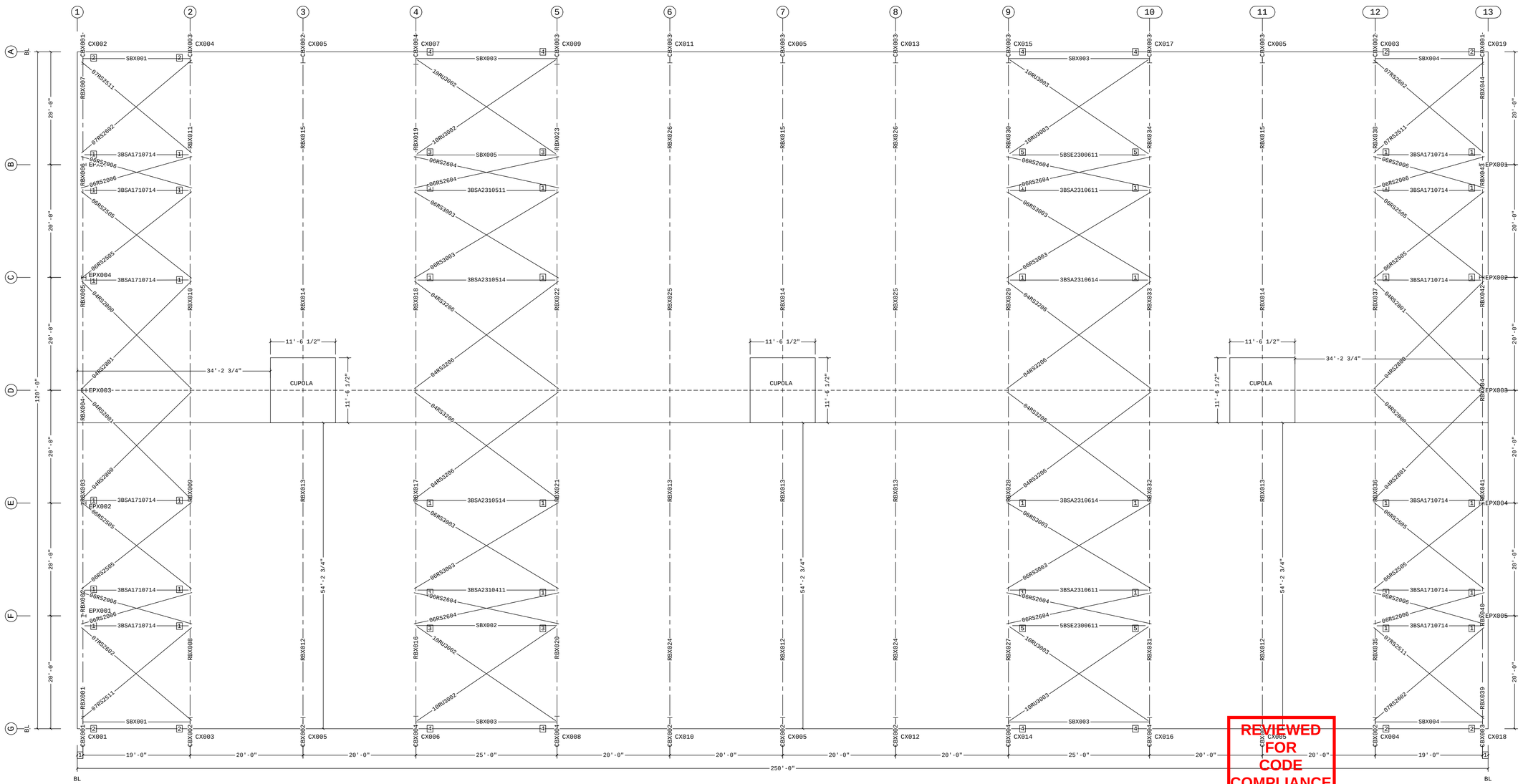

PRIMARY AND ROOF BRACING PLAN

REVIEWED FOR CODE COMPLIANCE 01/27/2022

COLORADO LICENSED MANUEL M. WEBB 0052792 PROFESSIONAL ENGINEER

09/10/2021

1 1'-0"

☐ Dimension Key

Shape Name = Riding Arena

PERMIT SET- For Building Dept. Approval

1. USE 1/2 X 1 1/2 A325T BOLT (49080) AND NUT (47120) W/O WASHERS. SNUG TIGHTEN BOLTS FOR ALL SECONDARY CONNECTIONS, SECONDARY CLIP CONNECTIONS, AND FLANGE BRACE CONNECTIONS, UNLESS NOTED OTHERWISE.
2. SLOT REINFORCEMENT PLATES NEED NOT BE LOCATED ON THE SAME SIDE OF THE WEB AS THE HILLSIDE WASHER.

MODIFIED IN AUTOCAD

THE VP ENGINEER'S SEAL APPLIES ONLY TO THE WORK PRODUCT OF VP AND DESIGN AND PERFORMANCE REQUIREMENTS SPECIFIED BY VP. THE VP ENGINEER'S SEAL DOES NOT APPLY TO THE PERFORMANCE OR DESIGN OF ANY OTHER PRODUCT OR COMPONENT FURNISHED BY VP EXCEPT TO ANY DESIGN OR PERFORMANCE REQUIREMENTS SPECIFIED BY VP.

THIS DRAWING, INCLUDING THE INFORMATION HEREON, REMAINS THE PROPERTY OF VP BUILDINGS. IT IS PROVIDED SOLELY FOR ERECTING THE BUILDING DESCRIBED IN THE APPLICABLE PURCHASE ORDER AND MAY BE REPRODUCED ONLY FOR THAT PURPOSE. IT SHALL NOT BE MODIFIED, REPRODUCED OR USED FOR ANY OTHER PURPOSE WITHOUT PRIOR WRITTEN APPROVAL OF VP BUILDINGS.

THE GENERAL CONTRACTOR AND/OR ERECTOR IS SOLELY RESPONSIBLE FOR ACCURATE GOOD QUALITY WORKMANSHIP IN ERECTING THIS BUILDING IN ACCORDANCE WITH THIS DRAWING, DETAILS REFERENCED IN THIS DRAWING, ALL APPLICABLE VP BUILDINGS ERECTION GUIDES, AND INDUSTRY STANDARDS PERTAINING TO PROPER ERECTION, INCLUDING THE CORRECT USE OF TEMPORARY BRACING.

D

VP Buildings
3200 Players Club Circle Memphis TN 38125

REV	DATE	BY	DESCRIPTION

NTS

PRIMARY AND ROOF BRACING PLAN

BUILDER	Rule Steel
CUSTOMER	
LOCATION	Clark, Colorado
PROJECT	DC Riding Arena
BUILDERS PO#	

VP BUILDINGS VARCO PRUDEN
A BlueScope Steel Company
VPC VERSION: **2021.2a**

JOBNO	21-007748-01
DATE	09/08/2021
DRAWN/CHECK	SDA SDA
PAGE	7

a division of BlueScope Buildings North America, Inc.

FILENAME: **E:\Divya selvaraj\CURRENT JOB\21-007748-01_permit\02 - OUTGOING\05 - PERMIT\CAD\7_DC Riding Arena Option 2_PRIMARY AND ROOF BRACING PLAN.dwg**

SAVE DATE: 9/8/2021 SAVE TIME: 15:45:16 LAST SAVED BY: dselvaraj

Frame Member Schedule

Part	Mem	Width	Thick	WebThk.	Depth1	Depth2	Approx.Lgth	Approx.Weight	Detail
CBX001	10002	5.0000	.1875	.1345	10"	10"	3'-11 1/4"	48#	
CBX001	10001	5.0000	.1875	.1345	10"	10"	3'-11 1/4"	48#	
CX001	1	6.0000	.3750	.1345	1'-6"	1'-6"	15'-5 3/4"	403#	
RBX001	2	5.0000	.3750	.1345	2'-2"	1'-0"	8'-7 1/2"	230#	
RBX002	3-4	5.0000	.3750	.1345	1'-0"	1'-0"	23'-2 1/16"	464#	
RBX003	5	5.0000	.3750	.1345	1'-0"	1'-0"	23'-4"	451#	
	6	5.0000	.3750	.1345	1'-0"	9"			
RBX004	7	5.0000	.3750	.1644	9"	2'-7 1/2"	13'-0"	339#	
	8	5.0000	.3750	.1644	2'-7 1/2"	9"			
RBX005	9	5.0000	.3750	.1345	9"	1'-0"	23'-4"	451#	
	10	5.0000	.3750	.1345	1'-0"	1'-0"			
RBX006	11-12	5.0000	.3750	.1345	1'-0"	1'-0"	22'-0"	442#	
RBX007	13	5.0000	.3750	.1345	1'-0"	2'-2"	9'-9 9/16"	253#	
CX002	14	6.0000	.3750	.1345	1'-6"	1'-6"	15'-5 3/4"	403#	
EPX001	15	6.0000	.3750	.1644	10"	10"	20'-8 1/4"	441#	BR25CA
EPX002	16	8.0000	.3750	.1644	10"	10"	27'-4 9/16"	720#	BR25A3
EPX003	17	9.0000	.3750	.2500	10"	10"	32'-2 11/16"	1015#	
EPX004	18	8.0000	.3750	.1644	10"	10"	27'-4 9/16"	720#	BR25A3
EPX005	19	6.0000	.3750	.1644	10"	10"	20'-8 1/4"	441#	BR25CA

Bolt Connection & Plate Schedule

Id	Qty	Grade	Bolt Dia.	Bolt Length	Plate Thick.	Rows Out	Rows In	PartNo
A	4	A325	1/2"	1 1/2"	3/8"	1	1	49080
B	8	A325	3/4"	2 1/2"	1/2"	2	2	0097284
C	8	A325	3/4"	2 1/2"	3/8"	2	2	0097284
D	6	A325	3/4"	2 1/2"	3/8"	1	2	0097284
E	6	A325	3/4"	2 1/2"	1/2"	2	1	0097284

<S> - (2) Washers (095872) req'd at Flange Brace to Secondary.

Frame Clearances
Horiz. Clearance between members 1(CX001) and 14(CX002): 115'-5 3/16"
Vert. Clearance at member 1(CX001): 13'-2 9/16"
Vert. Clearance at member 14(CX002): 13'-2 9/16"
Vert. Clearance at member 15(EPX001): 20'-7 1/4"
Vert. Clearance at member 16(EPX002): 27'-3 1/4"
Vert. Clearance at member 17(EPX003): 32'-2 11/16"
Vert. Clearance at member 18(EPX004): 27'-3 1/4"
Vert. Clearance at member 19(EPX005): 20'-7 1/4"
Finished Floor Elevation = 100'-0" (Unless Noted Otherwise)

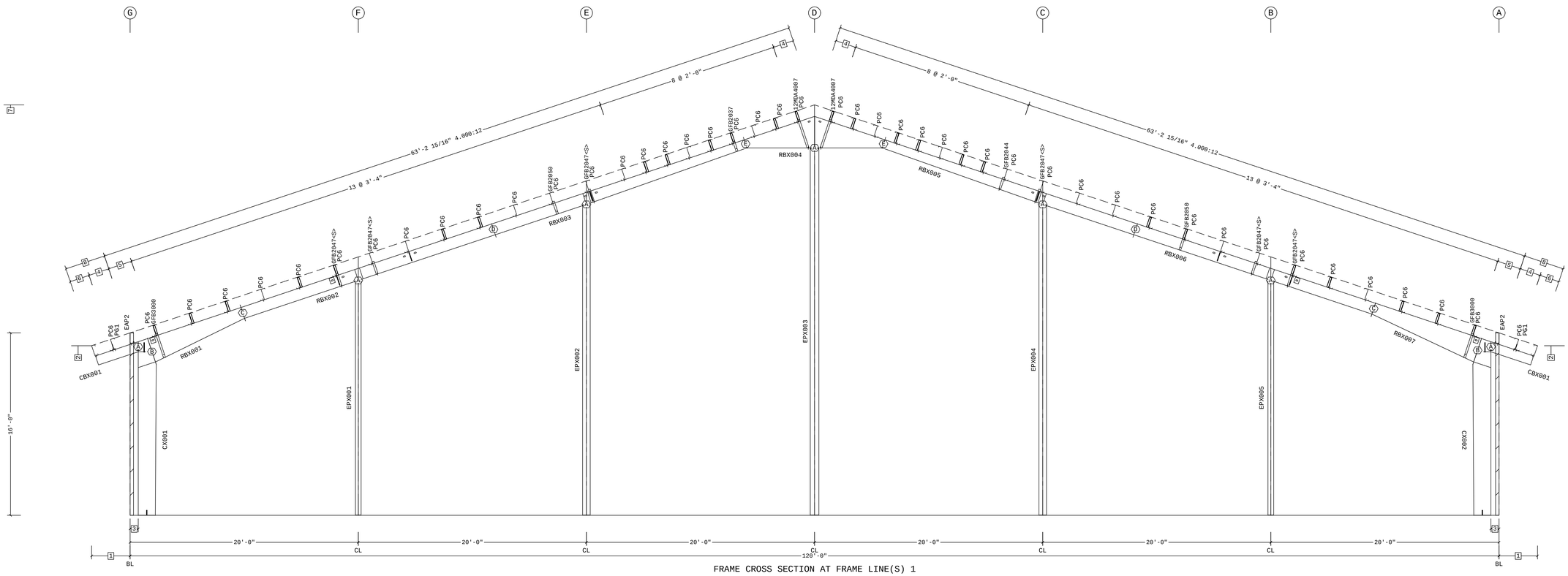

FRAME CROSS SECTION AT FRAME LINE(S) 1

8 3'-6 11/16" 4.000:12
7 36'-0" Ridge Ht.
6 1'-8 7/8"
5 2'-1 1/8"
4 1'-9 13/16"
3 8 1/2"
2 14'-10 1/2"
1 3'-4 1/2"
Dimension Key

REVIEWED FOR CODE COMPLIANCE
01/27/2022

COLORADO LICENSED
MANUEL M. WUBNEH
0052792
PROFESSIONAL ENGINEER

09/10/2021

PERMIT SET- For Building Dept. Approval

Shape Name = Riding Arena Wall 4, Frame 1

1. USE 1/2 X 1 1/2 A325T BOLT (49080) AND NUT (47120) W/O WASHERS. SNUG TIGHTEN BOLTS FOR ALL SECONDARY CONNECTIONS, SECONDARY CLIP CONNECTIONS, AND FLANGE BRACE CONNECTIONS, UNLESS NOTED OTHERWISE.
2. SLOT REINFORCEMENT PLATES NEED NOT BE LOCATED ON THE SAME SIDE OF THE WEB AS THE HILLSIDE WASHER.

THE VP ENGINEER'S SEAL APPLIES ONLY TO THE WORK PRODUCT OF VP AND DESIGN AND PERFORMANCE REQUIREMENTS SPECIFIED BY VP. THE VP ENGINEER'S SEAL DOES NOT APPLY TO THE PERFORMANCE OR DESIGN OF ANY OTHER PRODUCT OR COMPONENT FURNISHED BY VP EXCEPT TO ANY DESIGN OR PERFORMANCE REQUIREMENTS SPECIFIED BY VP.

THIS DRAWING, INCLUDING THE INFORMATION HEREON, REMAINS THE PROPERTY OF VP BUILDINGS. IT IS PROVIDED SOLELY FOR ERECTING THE BUILDING DESCRIBED IN THE APPLICABLE PURCHASE ORDER AND MAY BE REPRODUCED ONLY FOR THAT PURPOSE. IT SHALL NOT BE MODIFIED, REPRODUCED OR USED FOR ANY OTHER PURPOSE WITHOUT PRIOR WRITTEN APPROVAL OF VP BUILDINGS.

THE GENERAL CONTRACTOR AND/OR ERECTOR IS SOLELY RESPONSIBLE FOR ACCURATE GOOD QUALITY WORKMANSHIP IN ERECTING THIS BUILDING IN ACCORDANCE WITH THIS DRAWING, DETAILS REFERENCED IN THIS DRAWING, ALL APPLICABLE VP BUILDINGS ERECTION GUIDES, AND INDUSTRY STANDARDS PERTAINING TO PROPER ERECTION, INCLUDING THE CORRECT USE OF TEMPORARY BRACING.

D

VP Buildings
3200 Players Club Circle Memphis TN 38125

REV	DATE	BY	DESCRIPTION

NTS

FRAME CROSS SECTION AT FRAME LINE(S) 1

BUILDER	Rule Steel
CUSTOMER	
LOCATION	Clark, Colorado
PROJECT	DC Riding Arena
BUILDERS PO#	

VP BUILDINGS
VARCO PRUDEN
A BlueScope Steel Company
VPC VERSION: 2021.2a

JOBNO	21-007748-01
DATE	09/08/2021
DRAWN/CHECK	SDA SDA
PAGE	8

a division of BlueScope Buildings North America, Inc.

MODIFIED IN AUTOCAD

FILENAME: E:\Divya selvaraj\CURRENT JOB\21-007748-01_permit\02 - OUTGOING\05 - PERMIT\CAD\8_DC Riding Arena Option 2_FRAME CROSS SECTION AT FRAME LINE(S) 1.dwg SAVE DATE: 9/8/2021 SAVE TIME: 15:45:20 LAST SAVED BY: dselvaraj

Frame Member Schedule

Part	Mem	Width	Thick	WebThk.	Depth1	Depth2	Approx.Lgth	Approx.Weight
CBX002	10001	5.0000	.1875	.1345	10"	10"	3'-11 1/4"	48#
CBX003	10002	5.0000	.1875	.1345	10"	10"	3'-11 13/16"	46#
CX003	1	10.0000	.7500	.3125	1'-3"	4'-0"	16'-0 1/2"	1582#
RBX008	2	8.0000	.7500	.3125	4'-9"	3'-5"	24'-1 3/16"	2078#
	3	8.0000	.6250	.1875	3'-5"	3'-5"		
RBX009	4	8.0000	.6250	.1875	3'-5"	2'-10"	35'-9 3/16"	1951#
	5	8.0000	.6250	.1875	2'-10"	1'-10"		
RBX010	6	8.0000	.6250	.1875	1'-10"	2'-10"	35'-9 1/8"	1946#
	7	8.0000	.6250	.1875	2'-10"	3'-5"		
RBX011	8	8.0000	.6250	.1875	3'-5"	3'-5"	24'-1 5/16"	2079#
	9	8.0000	.7500	.3125	3'-5"	4'-9"		
CX004	10	10.0000	.7500	.3125	1'-3"	4'-0"	16'-0 1/2"	1582#

Bolt Connection & Plate Schedule

Id	Qty	Grade	Bolt Dia.	Bolt Length	Plate Thick.	Rows Out	Rows In	PartNo
A	6	A325	1/2"	2"	3/8"	2	1	0097280
B	4	A325	1/2"	2"	1/4"	1	1	0097280
C	10	A325	7/8"	3 1/2"	3/4"	4	1	0097380
D	10	A325	3/4"	2 1/2"	3/8"	2	1	0097284
E	4	A325	3/4"	2 1/2"	3/8"	1	1	0097284

<S> - (2) Washers (095872) req'd at Flange Brace to Secondary.

Frame Clearances
Horiz. Clearance between members 1(CX003) and 10(CX004): 110'-6 11/16"
Vert. Clearance at member 1(CX003): 11'-6 1/8"
Vert. Clearance at member 10(CX004): 11'-6 1/8"
Finished Floor Elevation = 100'-0" (Unless Noted Otherwise)

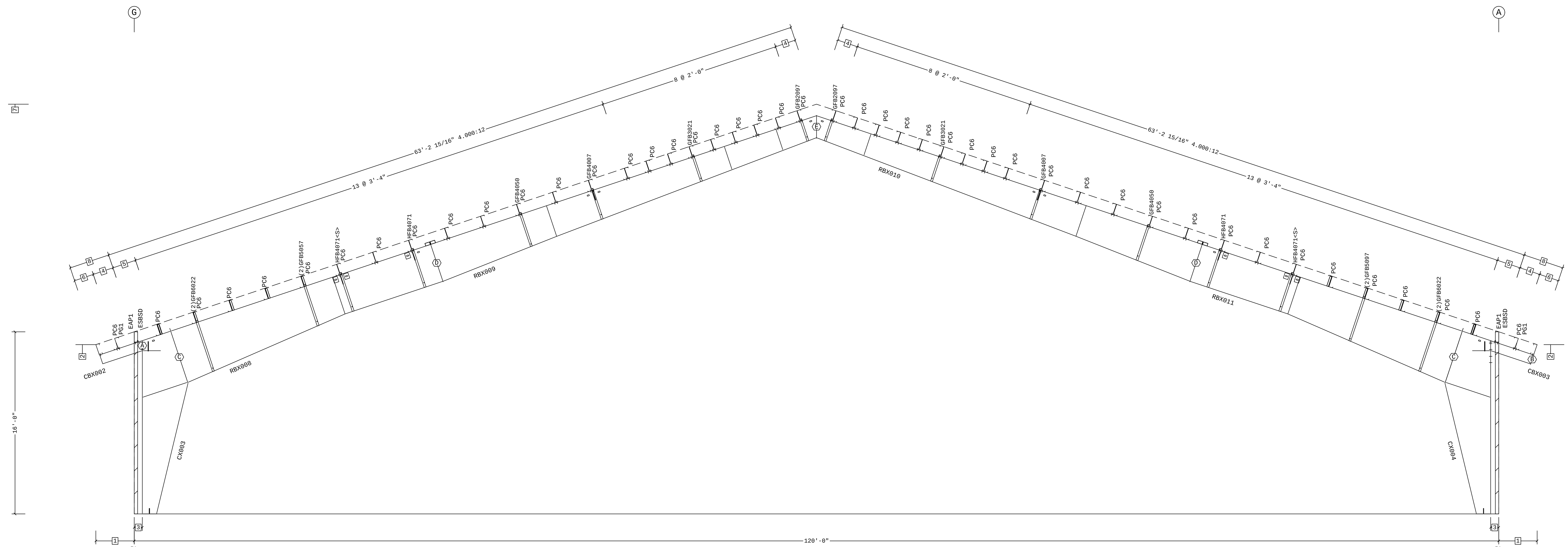

FRAME CROSS SECTION AT FRAME LINE(S) 2

8 3'-6 11/16" 4.000:12
7 36'-0" Ridge Ht.
6 1'-8 7/8"
5 2'-1 1/8"
4 1'-9 13/16"
3 8 1/2"
2 14'-10 1/2"
1 3'-4 1/2"
Dimension Key

Shape Name = Riding Arena Wall 4, Frame 2

REVIEWED FOR CODE COMPLIANCE
01/27/2022

09/10/2021

PERMIT SET- For Building Dept. Approval

1. USE 1/2 X 1 1/2 A325T BOLT (49080) AND NUT (47120) W/O WASHERS. SNUG TIGHTEN BOLTS FOR ALL SECONDARY CONNECTIONS, SECONDARY CLIP CONNECTIONS, AND FLANGE BRACE CONNECTIONS, UNLESS NOTED OTHERWISE.
2. SLOT REINFORCEMENT PLATES NEED NOT BE LOCATED ON THE SAME SIDE OF THE WEB AS THE HILLSIDE WASHER.

MODIFIED IN AUTOCAD

THE VP ENGINEER'S SEAL APPLIES ONLY TO THE WORK PRODUCT OF VP AND DESIGN AND PERFORMANCE REQUIREMENTS SPECIFIED BY VP. THE VP ENGINEER'S SEAL DOES NOT APPLY TO THE PERFORMANCE OR DESIGN OF ANY OTHER PRODUCT OR COMPONENT FURNISHED BY VP EXCEPT TO ANY DESIGN OR PERFORMANCE REQUIREMENTS SPECIFIED BY VP.

THIS DRAWING, INCLUDING THE INFORMATION HEREON, REMAINS THE PROPERTY OF VP BUILDINGS. IT IS PROVIDED SOLELY FOR ERECTING THE BUILDING DESCRIBED IN THE APPLICABLE PURCHASE ORDER AND MAY BE REPRODUCED ONLY FOR THAT PURPOSE. IT SHALL NOT BE MODIFIED, REPRODUCED OR USED FOR ANY OTHER PURPOSE WITHOUT PRIOR WRITTEN APPROVAL OF VP BUILDINGS.

THE GENERAL CONTRACTOR AND/OR ERECTOR IS SOLELY RESPONSIBLE FOR ACCURATE GOOD QUALITY WORKMANSHIP IN ERECTING THIS BUILDING IN ACCORDANCE WITH THIS DRAWING, DETAILS REFERENCED IN THIS DRAWING, ALL APPLICABLE VP BUILDINGS ERECTION GUIDES, AND INDUSTRY STANDARDS PERTAINING TO PROPER ERECTION, INCLUDING THE CORRECT USE OF TEMPORARY BRACING.

D

VP Buildings
3200 Players Club Circle Memphis TN 38125

REV	DATE	BY	DESCRIPTION

NTS

FRAME CROSS SECTION AT FRAME LINE(S) 2

BUILDER	Rule Steel
CUSTOMER	
LOCATION	Clark, Colorado
PROJECT	DC Riding Arena
BUILDERS PO#	

VP BUILDINGS
VARCO PRUDEN
A BlueScope Steel Company
VPC VERSION: 2021.2a

JOBNO	21-007748-01
DATE	09/08/2021
DRAWN/CHECK	SDA SDA
PAGE	9

FILENAME: E:\Divya selvaraj\CURRENT JOB\21-007748-01_permit\02 - OUTGOING\05 - PERMIT\CAD\9_DC Riding Arena Option 2_FRAME CROSS SECTION AT FRAME LINE(S) 2.dwg
SAVE DATE: 9/8/2021 SAVE TIME: 15:45:24 LAST SAVED BY: dselvaraj

a division of BlueScope Buildings North America, Inc.

Frame Member Schedule

Part	Mem	Width	Thick	WebThk.	Depth1	Depth2	Approx.Lgth	Approx.Weight
CBX002	10001	5.0000	.1875	.1345	10"	10"	3'-11 1/4"	48#
CBX002	10002	5.0000	.1875	.1345	10"	10"	3'-11 1/4"	48#
CX005	1	10.0000	.7500	.3750	1'-3"	4'-0"	16'-0 3/16"	1689#
RBX012	2	8.0000	.7500	.3125	5'-0"	3'-6"	24'-2 1/16"	2208#
	3	8.0000	.7500	.1875	3'-6"	3'-6"		
RBX013	4	8.0000	.6250	.1875	3'-6"	2'-10"	35'-9 5/16"	2149#
	5	8.0000	.7500	.1875	2'-10"	1'-10"		
RBX014	6	8.0000	.7500	.1875	1'-10"	2'-10"	35'-9 1/8"	2149#
	7	8.0000	.6250	.1875	2'-10"	3'-6"		
RBX015	8	8.0000	.7500	.1875	3'-6"	3'-6"	24'-2 1/4"	2250#
	9	8.0000	.7500	.3125	3'-6"	5'-0"		
CX005	10	10.0000	.7500	.3750	1'-3"	4'-0"	16'-0 3/16"	1689#

⬡ Bolt Connection & Plate Schedule

Id	Qty	Grade	Bolt Dia.	Bolt Length	Plate Thick.	Rows Out	Rows In	PartNo
A	6	A325	1/2"	2"	3/8"	2	1	0097280
B	10	A325	1"	3 1/2"	3/4"	4	1	0097288
C	6	A325	3/4"	2 1/2"	3/8"	2	1	0097284
D	4	A325	3/4"	2 1/2"	3/8"	1	1	0097284

<S> - (2) Washers (095872) req'd at Flange Brace to Secondary.

Frame Clearances
Horiz. Clearance between members 1(CX005) and 10(CX005): 110'-6 11/16"
Vert. Clearance at member 1(CX005): 11'-3"
Vert. Clearance at member 10(CX005): 11'-3"
Finished Floor Elevation = 100'-0" (Unless Noted Otherwise)

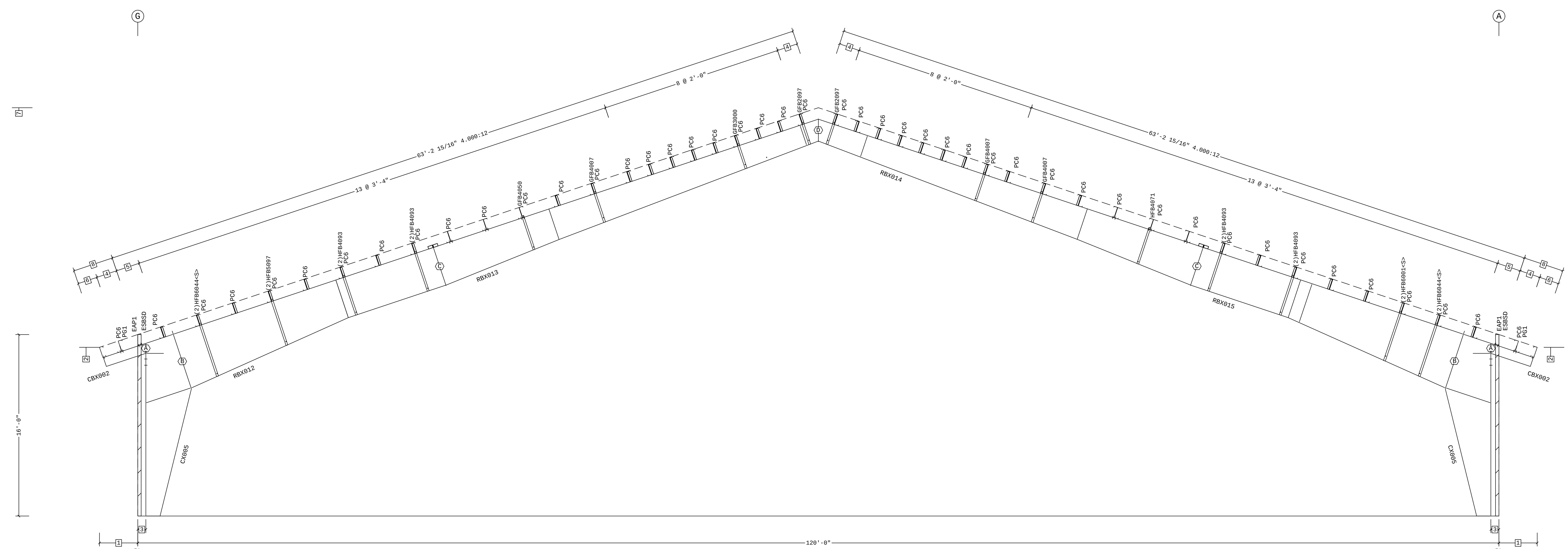

FRAME CROSS SECTION AT FRAME LINE(S) 3

8 3'-6 11/16" 4.000:12
7 36'-0" Ridge Ht.
6 1'-8 7/8"
5 2'-1 1/8"
4 1'-9 13/16"
3 8 1/2"
2 14'-10 1/2"
1 3'-4 1/2"
☐ Dimension Key

Shape Name = Riding Arena Wall 4, Frame 3

REVIEWED FOR CODE COMPLIANCE
01/27/2022

09/10/2021

PERMIT SET- For Building Dept. Approval

1. USE 1/2 X 1 1/2 A325T BOLT (49080) AND NUT (47120) W/O WASHERS. SNUG TIGHTEN BOLTS FOR ALL SECONDARY CONNECTIONS, SECONDARY CLIP CONNECTIONS, AND FLANGE BRACE CONNECTIONS, UNLESS NOTED OTHERWISE.
2. SLOT REINFORCEMENT PLATES NEED NOT BE LOCATED ON THE SAME SIDE OF THE WEB AS THE HILLSIDE WASHER.

MODIFIED IN AUTOCAD

THE VP ENGINEER'S SEAL APPLIES ONLY TO THE WORK PRODUCT OF VP AND DESIGN AND PERFORMANCE REQUIREMENTS SPECIFIED BY VP. THE VP ENGINEER'S SEAL DOES NOT APPLY TO THE PERFORMANCE OR DESIGN OF ANY OTHER PRODUCT OR COMPONENT FURNISHED BY VP EXCEPT TO ANY DESIGN OR PERFORMANCE REQUIREMENTS SPECIFIED BY VP.

THIS DRAWING, INCLUDING THE INFORMATION HEREON, REMAINS THE PROPERTY OF VP BUILDINGS. IT IS PROVIDED SOLELY FOR ERECTING THE BUILDING DESCRIBED IN THE APPLICABLE PURCHASE ORDER AND MAY BE REPRODUCED ONLY FOR THAT PURPOSE. IT SHALL NOT BE MODIFIED, REPRODUCED OR USED FOR ANY OTHER PURPOSE WITHOUT PRIOR WRITTEN APPROVAL OF VP BUILDINGS.

THE GENERAL CONTRACTOR AND/OR ERECTOR IS SOLELY RESPONSIBLE FOR ACCURATE GOOD QUALITY WORKMANSHIP IN ERECTING THIS BUILDING IN ACCORDANCE WITH THIS DRAWING, DETAILS REFERENCED IN THIS DRAWING, ALL APPLICABLE VP BUILDINGS ERECTION GUIDES, AND INDUSTRY STANDARDS PERTAINING TO PROPER ERECTION, INCLUDING THE CORRECT USE OF TEMPORARY BRACING.

D

VP Buildings
3200 Players Club Circle Memphis TN 38125

REV	DATE	BY	DESCRIPTION

NTS

FRAME CROSS SECTION AT FRAME LINE(S) 3

BUILDER	Rule Steel
CUSTOMER	
LOCATION	Clark, Colorado
PROJECT	DC Riding Arena
BUILDERS PO#	

VP BUILDINGS
VARCO PRUDEN
A BlueScope Steel Company
VPC VERSION: 2021.2a

JOBNO	21-007748-01
DATE	09/08/2021
DRAWN/CHECK	SDA SDA
PAGE	10

FILENAME: E:\Divya selvaraj\CURRENT JOB\21-007748-01_permit\02 - OUTGOING\05 - PERMIT\CAD\10_DC Riding Arena Option 2_FRAME CROSS SECTION AT FRAME LINE(S) 3.dwg

SAVE DATE: 9/8/2021 SAVE TIME: 15:45:27 LAST SAVED BY: dselvaraj

a division of BlueScope Buildings North America, Inc.

Frame Member Schedule

Part	Mem	Width	Thick	WebThk.	Depth1	Depth2	Approx.Lgth	Approx.Weight
CBX004	10001	5.0000	.1875	.1345	10"	10"	3'-11 1/4"	50#
CBX004	10002	5.0000	.1875	.1345	10"	10"	3'-11 1/4"	50#
CX006	1	10.0000	.7500	.3750	1'-6"	4'-7"	16'-2 3/4"	1866#
RBX016	2	8.0000	.7500	.3750	4'-10"	3'-4"	23'-6 1/4"	2472#
	3	8.0000	.7500	.3750	3'-4"	3'-4"		
RBX017	4	8.0000	.7500	.3750	3'-4"	3'-0"	35'-9 1/8"	2881#
	5	8.0000	.7500	.3750	3'-0"	1'-6"		
RBX018	6	8.0000	.7500	.3750	1'-6"	3'-0"	35'-9 1/8"	2882#
	7	8.0000	.7500	.3750	3'-0"	3'-4"		
RBX019	8	8.0000	.7500	.3750	3'-4"	3'-4"	23'-6 1/4"	2472#
	9	8.0000	.7500	.3750	3'-4"	4'-10"		
CX007	10	10.0000	.7500	.3750	1'-6"	4'-7"	16'-2 3/4"	1866#

Bolt Connection & Plate Schedule

Id	Qty	Grade	Bolt Dia.	Bolt Length	Plate Thick.	Rows Out	Rows In	PartNo
A	6	A325	1/2"	2"	1/2"	2	1	0097280
B	10	A325	7/8"	3 1/2"	3/4"	4	1	0097380
C	8	A325	3/4"	2 1/2"	1/2"	3	1	0097284
D	8	A325	3/4"	2 1/2"	3/8"	2	2	0097284

<S> - (2) Washers (095872) req'd at Flange Brace to Secondary.

Frame Clearances
Horiz. Clearance between members 1(CX006) and 10(CX007): 109'-4 11/16"
Vert. Clearance at member 1(CX006): 11'-7 7/16"
Vert. Clearance at member 10(CX007): 11'-7 7/16"
Finished Floor Elevation = 100'-0" (Unless Noted Otherwise)

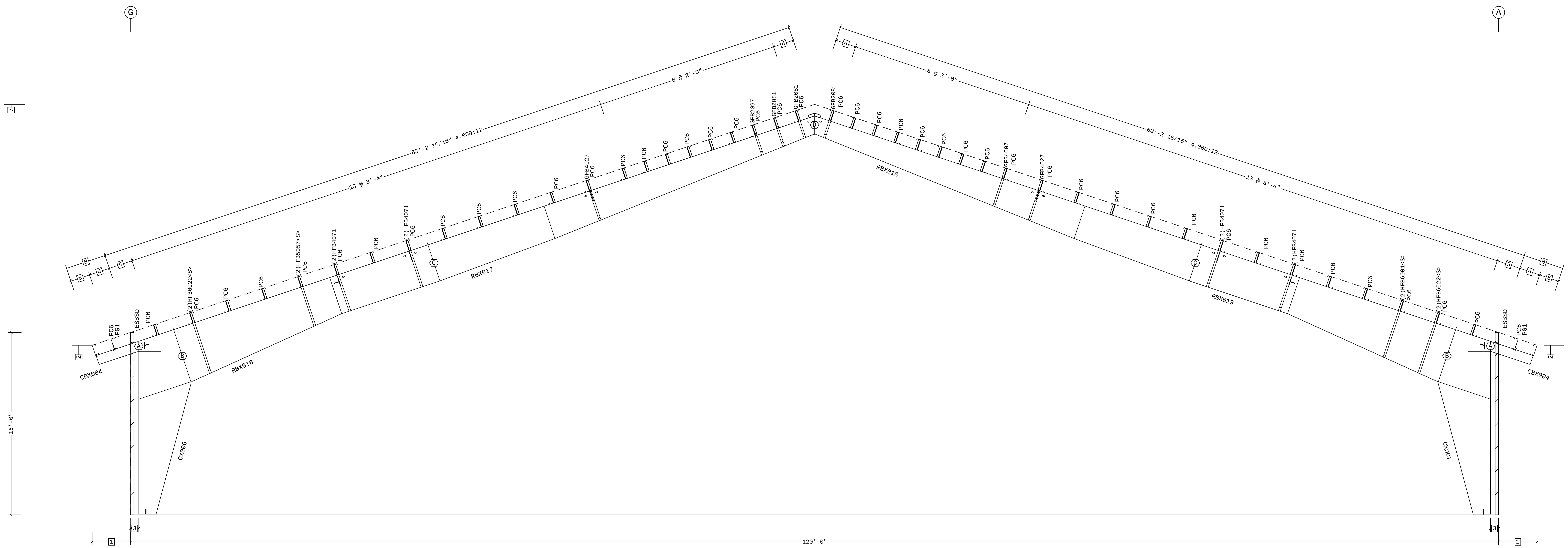

FRAME CROSS SECTION AT FRAME LINE(S) 4

8 3'-6 11/16" 4.000:12
7 36'-0" Ridge Ht.
6 1'-8 7/8"
5 2'-1 1/8"
4 1'-9 13/16"
3 8 1/2"
2 14'-10 1/2"
1 3'-4 1/2"
Dimension Key

REVIEWED FOR CODE COMPLIANCE 01/27/2022

09/10/2021

Shape Name = Riding Arena Wall 4, Frame 4

PERMIT SET- For Building Dept. Approval

1. USE 1/2 X 1 1/2 A325T BOLT (49080) AND NUT (47120) W/O WASHERS. SNUG TIGHTEN BOLTS FOR ALL SECONDARY CONNECTIONS, SECONDARY CLIP CONNECTIONS, AND FLANGE BRACE CONNECTIONS, UNLESS NOTED OTHERWISE.
2. SLOT REINFORCEMENT PLATES NEED NOT BE LOCATED ON THE SAME SIDE OF THE WEB AS THE HILLSIDE WASHER.

THE VP ENGINEER'S SEAL APPLIES ONLY TO THE WORK PRODUCT OF VP AND DESIGN AND PERFORMANCE REQUIREMENTS SPECIFIED BY VP. THE VP ENGINEER'S SEAL DOES NOT APPLY TO THE PERFORMANCE OR DESIGN OF ANY OTHER PRODUCT OR COMPONENT FURNISHED BY VP EXCEPT TO ANY DESIGN OR PERFORMANCE REQUIREMENTS SPECIFIED BY VP.

THIS DRAWING, INCLUDING THE INFORMATION HEREON, REMAINS THE PROPERTY OF VP BUILDINGS. IT IS PROVIDED SOLELY FOR ERECTING THE BUILDING DESCRIBED IN THE APPLICABLE PURCHASE ORDER AND MAY BE REPRODUCED ONLY FOR THAT PURPOSE. IT SHALL NOT BE MODIFIED, REPRODUCED OR USED FOR ANY OTHER PURPOSE WITHOUT PRIOR WRITTEN APPROVAL OF VP BUILDINGS.

THE GENERAL CONTRACTOR AND/OR ERECTOR IS SOLELY RESPONSIBLE FOR ACCURATE GOOD QUALITY WORKMANSHIP IN ERECTING THIS BUILDING IN ACCORDANCE WITH THIS DRAWING, DETAILS REFERENCED IN THIS DRAWING, ALL APPLICABLE VP BUILDINGS ERECTION GUIDES, AND INDUSTRY STANDARDS PERTAINING TO PROPER ERECTION, INCLUDING THE CORRECT USE OF TEMPORARY BRACING.

D

VP Buildings
3200 Players Club Circle Memphis TN 38125

REV	DATE	BY	DESCRIPTION

NTS

FRAME CROSS SECTION AT FRAME LINE(S) 4

BUILDER	Rule Steel
CUSTOMER	
LOCATION	Clark, Colorado
PROJECT	DC Riding Arena
BUILDERS PO#	

VP BUILDINGS VARCO PRUDEN
A BlueScope Steel Company
VPC VERSION: 2021.2a

JOBNO	21-007748-01
DATE	09/08/2021
DRAWN/CHECK	SDA SDA
PAGE	11

MODIFIED IN AUTOCAD

FILENAME: E:\Divya selvaraj\CURRENT JOB\21-007748-01_permit\02 - OUTGOING\05 - PERMIT\CAD\11_DC Riding Arena Option 2_FRAME CROSS SECTION AT FRAME LINE(S) 4.dwg

SAVE DATE: 9/8/2021 SAVE TIME: 15:45:31 LAST SAVED BY: dselvaraj

a division of BlueScope Buildings North America, Inc.

Frame Member Schedule

Part	Mem	Width	Thick	WebThk.	Depth1	Depth2	Approx.Lgth	Approx.Weight
CBX004	10001	5.0000	.1875	.1345	10"	10"	3'-11 1/4"	50#
CBX003	10002	5.0000	.1875	.1345	10"	10"	3'-11 13/16"	46#
CX008	1	10.0000	.7500	.3750	1'-6"	4'-7"	16'-2 3/4"	1869#
RBX020	2	8.0000	.7500	.5000	4'-10"	3'-4"	23'-6 1/4"	2913#
	3	8.0000	.7500	.5000	3'-4"	3'-4"		
RBX021	4	8.0000	.7500	.3750	3'-4"	3'-0"	35'-9 1/8"	2881#
	5	8.0000	.7500	.3750	3'-0"	1'-6"		
RBX022	6	8.0000	.7500	.3750	1'-6"	3'-0"	35'-9 1/8"	2882#
	7	8.0000	.7500	.3750	3'-0"	3'-4"		
RBX023	8	8.0000	.7500	.3750	3'-4"	3'-4"	23'-6 1/4"	2472#
	9	8.0000	.7500	.3750	3'-4"	4'-10"		
CX009	10	10.0000	.7500	.3750	1'-6"	4'-7"	16'-2 3/4"	1866#

Bolt Connection & Plate Schedule

Id	Qty	Grade	Bolt Dia.	Bolt Length	Plate Thick.	Rows Out	Rows In	PartNo
A	6	A325	1/2"	2"	1/2"	2	1	0097280
B	4	A325	1/2"	2"	1/4"	1	1	0097280
C	10	A325	7/8"	3 1/2"	3/4"	4	1	0097380
D	8	A325	3/4"	2 1/2"	1/2"	3	1	0097284
E	8	A325	3/4"	2 1/2"	3/8"	2	2	0097284

<S> - (2) Washers (095872) req'd at Flange Brace to Secondary.

Frame Clearances
Horiz. Clearance between members 1(CX008) and 10(CX009): 109'-4 11/16"
Vert. Clearance at member 1(CX008): 11'-7 7/16"
Vert. Clearance at member 10(CX009): 11'-7 7/16"
Finished Floor Elevation = 100'-0" (Unless Noted Otherwise)

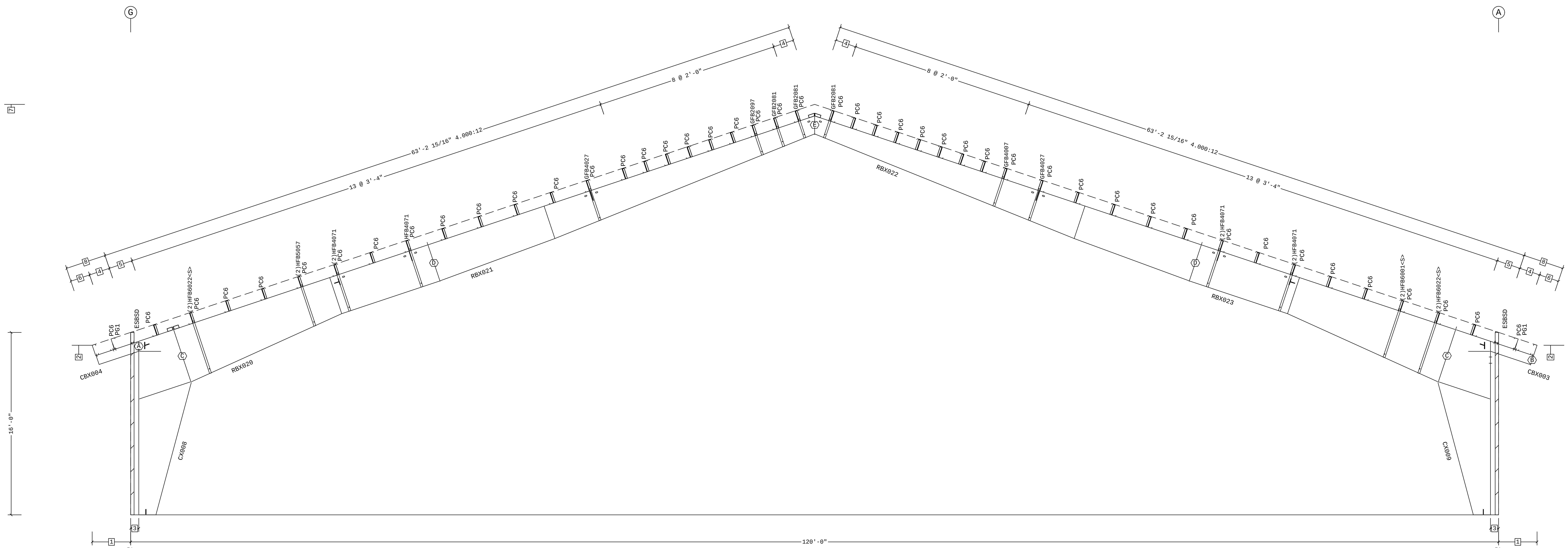

FRAME CROSS SECTION AT FRAME LINE(S) 5

REVIEWED FOR CODE COMPLIANCE 01/27/2022

COLORADO LICENSED PROFESSIONAL ENGINEER MANUEL M. WIEBEH 0052792

09/10/2021

8 3'-6 11/16" 4.000:12
7 36'-0" Ridge Ht.
6 1'-8 7/8"
5 2'-1 1/8"
4 1'-9 13/16"
3 8 1/2"
2 14'-10 1/2"
1 3'-4 1/2"
☐ Dimension Key

Shape Name = Riding Arena Wall 4, Frame 5

PERMIT SET- For Building Dept. Approval

1. USE 1/2 X 1 1/2 A325T BOLT (49080) AND NUT (47120) W/O WASHERS. SNUG TIGHTEN BOLTS FOR ALL SECONDARY CONNECTIONS, SECONDARY CLIP CONNECTIONS, AND FLANGE BRACE CONNECTIONS, UNLESS NOTED OTHERWISE.
2. SLOT REINFORCEMENT PLATES NEED NOT BE LOCATED ON THE SAME SIDE OF THE WEB AS THE HILLSIDE WASHER.

THE VP ENGINEER'S SEAL APPLIES ONLY TO THE WORK PRODUCT OF VP AND DESIGN AND PERFORMANCE REQUIREMENTS SPECIFIED BY VP. THE VP ENGINEER'S SEAL DOES NOT APPLY TO THE PERFORMANCE OR DESIGN OF ANY OTHER PRODUCT OR COMPONENT FURNISHED BY VP EXCEPT TO ANY DESIGN OR PERFORMANCE REQUIREMENTS SPECIFIED BY VP.

THIS DRAWING, INCLUDING THE INFORMATION HEREON, REMAINS THE PROPERTY OF VP BUILDINGS. IT IS PROVIDED SOLELY FOR ERECTING THE BUILDING DESCRIBED IN THE APPLICABLE PURCHASE ORDER AND MAY BE REPRODUCED ONLY FOR THAT PURPOSE. IT SHALL NOT BE MODIFIED, REPRODUCED OR USED FOR ANY OTHER PURPOSE WITHOUT PRIOR WRITTEN APPROVAL OF VP BUILDINGS.

THE GENERAL CONTRACTOR AND/OR ERECTOR IS SOLELY RESPONSIBLE FOR ACCURATE GOOD QUALITY WORKMANSHIP IN ERECTING THIS BUILDING IN ACCORDANCE WITH THIS DRAWING, DETAILS REFERENCED IN THIS DRAWING, ALL APPLICABLE VP BUILDINGS ERECTION GUIDES, AND INDUSTRY STANDARDS PERTAINING TO PROPER ERECTION, INCLUDING THE CORRECT USE OF TEMPORARY BRACING.

D

VP Buildings
3200 Players Club Circle Memphis TN 38125

REV	DATE	BY	DESCRIPTION

NTS

FRAME CROSS SECTION AT FRAME LINE(S) 5

BUILDER	Rule Steel
CUSTOMER	
LOCATION	Clark, Colorado
PROJECT	DC Riding Arena
BUILDERS PO#	

VP BUILDINGS
VARCO PRUDEN
A BlueScope Steel Company
VPC VERSION: 2021.2a

JOBNO	21-007748-01
DATE	09/08/2021
DRAWN/CHECK	SDA SDA
PAGE	12

MODIFIED IN AUTOCAD

FILENAME: E:\Divya selvaraj\CURRENT JOB\21-007748-01_permit\02 - OUTGOING\05 - PERMIT\CAD\12_DC Riding Arena Option 2_FRAME CROSS SECTION AT FRAME LINE(S) 5.dwg SAVE DATE: 9/8/2021 SAVE TIME: 15:45:36 LAST SAVED BY: dselvaraj

a division of BlueScope Buildings North America, Inc.

Frame Member Schedule

Part	Mem	Width	Thick	WebThk.	Depth1	Depth2	Approx.Lgth	Approx.Weight
CBX002	10001	5.0000	.1875	.1345	10"	10"	3'-11 1/4"	48#
CBX003	10002	5.0000	.1875	.1345	10"	10"	3'-11 13/16"	46#
CX010	1	10.0000	.7500	.3125	1'-3"	4'-0"	16'-0 3/16"	1559#
RBX024	2	8.0000	.7500	.3125	5'-0"	3'-6"	24'-2 1/16"	2181#
	3	8.0000	.7500	.1875	3'-6"	3'-6"		
RBX013	4	8.0000	.6250	.1875	3'-6"	2'-10"	35'-9 5/16"	2149#
	5	8.0000	.7500	.1875	2'-10"	1'-10"		
RBX025	6	8.0000	.7500	.1875	1'-10"	2'-10"	35'-9 1/8"	2149#
	7	8.0000	.6250	.1875	2'-10"	3'-6"		
RBX026	8	8.0000	.7500	.1875	3'-6"	3'-6"	24'-2 1/4"	2183#
	9	8.0000	.7500	.3125	3'-6"	5'-0"		
CX011	10	10.0000	.7500	.3125	1'-3"	4'-0"	16'-0 3/16"	1559#

Bolt Connection & Plate Schedule

Id	Qty	Grade	Bolt Dia.	Bolt Length	Plate Thick.	Rows Out	Rows In	PartNo
A	6	A325	1/2"	2"	3/8"	2	1	0097280
B	4	A325	1/2"	2"	1/4"	1	1	0097280
C	10	A325	7/8"	3 1/2"	3/4"	4	1	0097380
D	6	A325	3/4"	2 1/2"	3/8"	2	1	0097284
E	4	A325	3/4"	2 1/2"	3/8"	1	1	0097284

<S> - (2) Washers (095872) req'd at Flange Brace to Secondary.

Frame Clearances
Horiz. Clearance between members 1(CX010) and 10(CX011): 110'-6 11/16"
Vert. Clearance at member 1(CX010): 11'-3"
Vert. Clearance at member 10(CX011): 11'-3"
Finished Floor Elevation = 100'-0" (Unless Noted Otherwise)

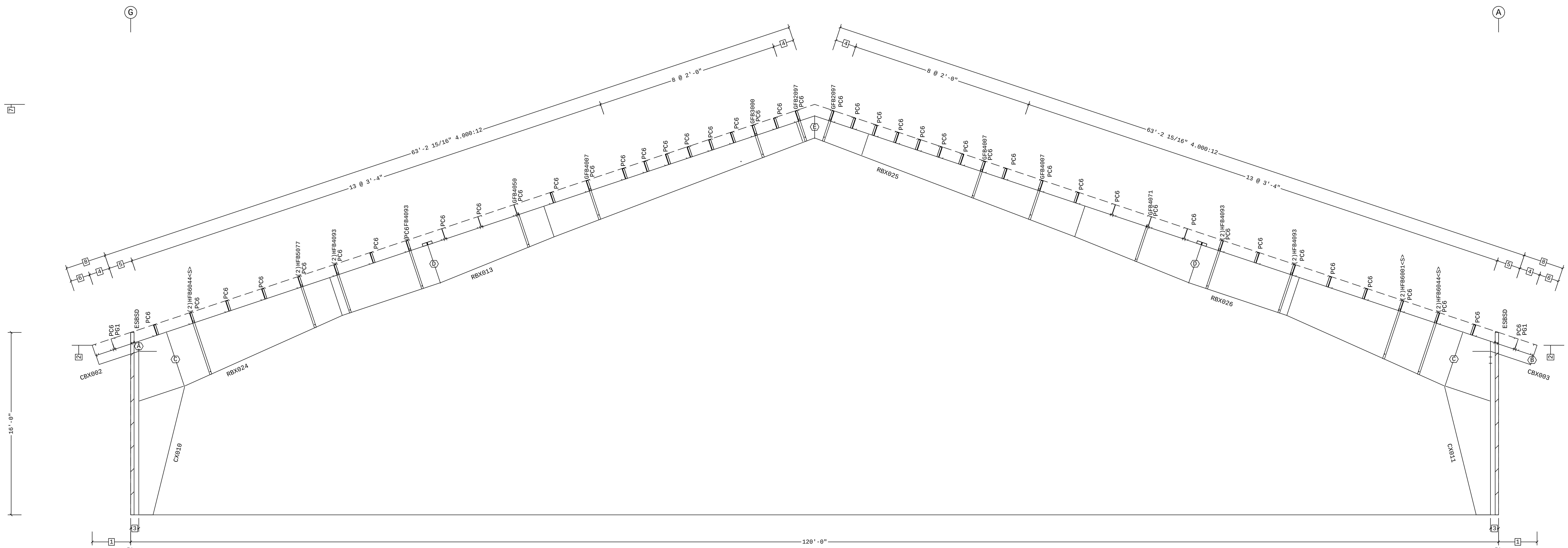

FRAME CROSS SECTION AT FRAME LINE(S) 6

8 3'-6 11/16" 4.000:12
7 36'-0" Ridge Ht.
6 1'-8 7/8"
5 2'-1 1/8"
4 1'-9 13/16"
3 8 1/2"
2 14'-10 1/2"
1 3'-4 1/2"
Dimension Key

Shape Name = Riding Arena Wall 4, Frame 6

REVIEWED FOR CODE COMPLIANCE 01/27/2022

COLORADO LICENSED PROFESSIONAL ENGINEER 0052792

09/10/2021

PERMIT SET- For Building Dept. Approval

1. USE 1/2 X 1 1/2 A325T BOLT (49080) AND NUT (47120) W/O WASHERS. SNUG TIGHTEN BOLTS FOR ALL SECONDARY CONNECTIONS, SECONDARY CLIP CONNECTIONS, AND FLANGE BRACE CONNECTIONS, UNLESS NOTED OTHERWISE.
2. SLOT REINFORCEMENT PLATES NEED NOT BE LOCATED ON THE SAME SIDE OF THE WEB AS THE HILLSIDE WASHER.

MODIFIED IN AUTOCAD

THE VP ENGINEER'S SEAL APPLIES ONLY TO THE WORK PRODUCT OF VP AND DESIGN AND PERFORMANCE REQUIREMENTS SPECIFIED BY VP. THE VP ENGINEER'S SEAL DOES NOT APPLY TO THE PERFORMANCE OR DESIGN OF ANY OTHER PRODUCT OR COMPONENT FURNISHED BY VP EXCEPT TO ANY DESIGN OR PERFORMANCE REQUIREMENTS SPECIFIED BY VP.

THIS DRAWING, INCLUDING THE INFORMATION HEREON, REMAINS THE PROPERTY OF VP BUILDINGS. IT IS PROVIDED SOLELY FOR ERECTING THE BUILDING DESCRIBED IN THE APPLICABLE PURCHASE ORDER AND MAY BE REPRODUCED ONLY FOR THAT PURPOSE. IT SHALL NOT BE MODIFIED, REPRODUCED OR USED FOR ANY OTHER PURPOSE WITHOUT PRIOR WRITTEN APPROVAL OF VP BUILDINGS.

THE GENERAL CONTRACTOR AND/OR ERECTOR IS SOLELY RESPONSIBLE FOR ACCURATE GOOD QUALITY WORKMANSHIP IN ERECTING THIS BUILDING IN ACCORDANCE WITH THIS DRAWING, DETAILS REFERENCED IN THIS DRAWING, ALL APPLICABLE VP BUILDINGS ERECTION GUIDES, AND INDUSTRY STANDARDS PERTAINING TO PROPER ERECTION, INCLUDING THE CORRECT USE OF TEMPORARY BRACING.

D

VP Buildings
3200 Players Club Circle Memphis TN 38125

REV	DATE	BY	DESCRIPTION

NTS

FRAME CROSS SECTION AT FRAME LINE(S) 6

BUILDER	Rule Steel
CUSTOMER	
LOCATION	Clark, Colorado
PROJECT	DC Riding Arena
BUILDERS PO#	

VP BUILDINGS
VARCO PRUDEN
A BlueScope Steel Company
VPC VERSION: 2021.2a

JOBNO	21-007748-01
DATE	09/08/2021
DRAWN/CHECK	SDA SDA
PAGE	13

FILENAME: E:\Divya selvaraj\CURRENT JOB\21-007748-01_permit\02 - OUTGOING\05 - PERMIT\CAD\13_DC Riding Arena Option 2_FRAME CROSS SECTION AT FRAME LINE(S) 6.dwg   SAVE DATE: 9/8/2021   SAVE TIME: 15:45:38   LAST SAVED BY: dselvaraj

a division of BlueScope Buildings North America, Inc.

Frame Member Schedule

Part	Mem	Width	Thick	WebThk.	Depth1	Depth2	Approx.Lgth	Approx.Weight
CBX002	10001	5.0000	.1875	.1345	10"	10"	3'-11 1/4"	48#
CBX003	10002	5.0000	.1875	.1345	10"	10"	3'-11 13/16"	46#
CX005	1	10.0000	.7500	.3750	1'-3"	4'-0"	16'-0 3/16"	1689#
RBX012	2	8.0000	.7500	.3125	5'-0"	3'-6"	24'-2 1/16"	2208#
	3	8.0000	.7500	.1875	3'-6"	3'-6"		
RBX013	4	8.0000	.6250	.1875	3'-6"	2'-10"	35'-9 5/16"	2149#
	5	8.0000	.7500	.1875	2'-10"	1'-10"		
RBX014	6	8.0000	.7500	.1875	1'-10"	2'-10"	35'-9 1/8"	2149#
	7	8.0000	.6250	.1875	2'-10"	3'-6"		
RBX015	8	8.0000	.7500	.1875	3'-6"	3'-6"	24'-2 1/4"	2250#
	9	8.0000	.7500	.3125	3'-6"	5'-0"		
CX005	10	10.0000	.7500	.3750	1'-3"	4'-0"	16'-0 3/16"	1689#

Bolt Connection & Plate Schedule

Id	Qty	Grade	Bolt Dia.	Bolt Length	Plate Thick.	Rows Out	Rows In	PartNo
A	6	A325	1/2"	2"	3/8"	2	1	0097280
B	4	A325	1/2"	2"	1/4"	1	1	0097280
C	10	A325	1"	3 1/2"	3/4"	4	1	0097288
D	6	A325	3/4"	2 1/2"	3/8"	2	1	0097284
E	4	A325	3/4"	2 1/2"	3/8"	1	1	0097284

<S> - (2) Washers (095872) req'd at Flange Brace to Secondary.

Frame Clearances
Horiz. Clearance between members 1(CX005) and 10(CX005): 110'-6 11/16"
Vert. Clearance at member 1(CX005): 11'-3"
Vert. Clearance at member 10(CX005): 11'-3"
Finished Floor Elevation = 100'-0" (Unless Noted Otherwise)

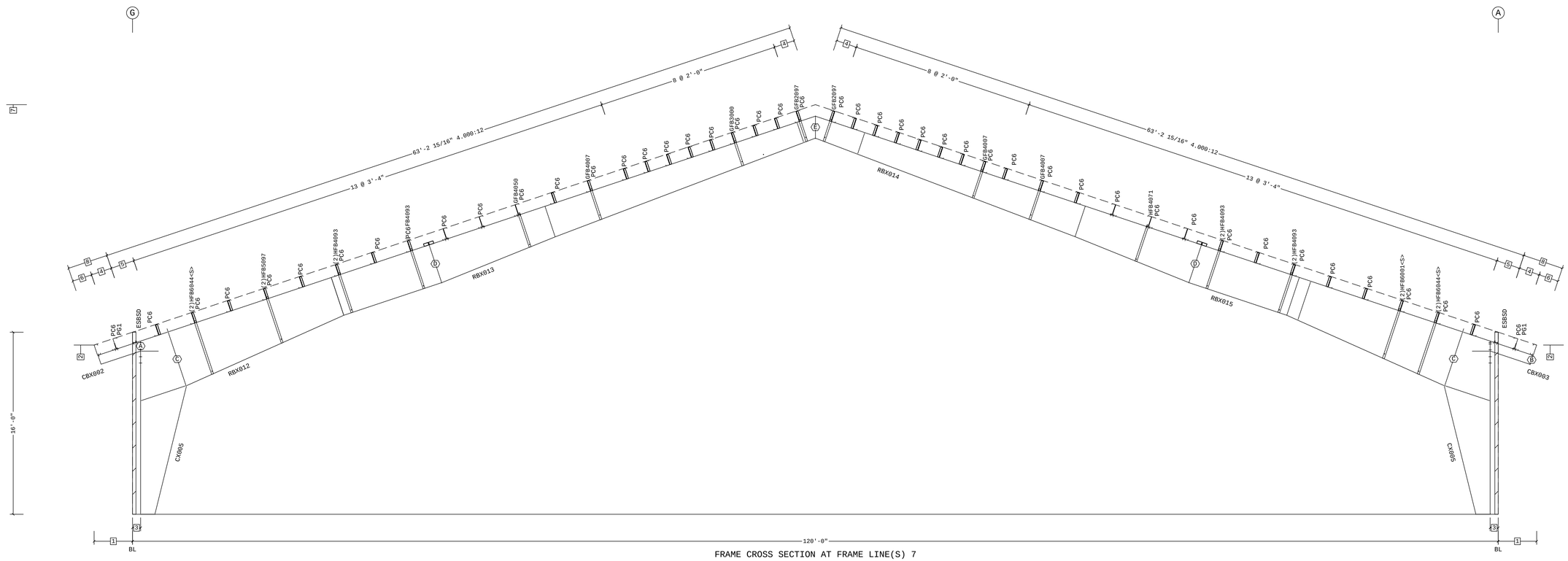

FRAME CROSS SECTION AT FRAME LINE(S) 7

8 3'-6 11/16" 4.000:12
7 36'-0" Ridge Ht.
6 1'-8 7/8"
5 2'-1 1/8"
4 1'-9 13/16"
3 8 1/2"
2 14'-10 1/2"
1 3'-4 1/2"
Dimension Key

REVIEWED FOR CODE COMPLIANCE
01/27/2022

COLORADO LICENSED
MANUEL M. WUBBE
0052792
PROFESSIONAL ENGINEER
09/10/2021

Shape Name = Riding Arena Wall 4, Frame 7

PERMIT SET- For Building Dept. Approval

1. USE 1/2 X 1 1/2 A325T BOLT (49080) AND NUT (47120) W/O WASHERS. SNUG TIGHTEN BOLTS FOR ALL SECONDARY CONNECTIONS, SECONDARY CLIP CONNECTIONS, AND FLANGE BRACE CONNECTIONS, UNLESS NOTED OTHERWISE.
2. SLOT REINFORCEMENT PLATES NEED NOT BE LOCATED ON THE SAME SIDE OF THE WEB AS THE HILLSIDE WASHER.

THE VP ENGINEER'S SEAL APPLIES ONLY TO THE WORK PRODUCT OF VP AND DESIGN AND PERFORMANCE REQUIREMENTS SPECIFIED BY VP. THE VP ENGINEER'S SEAL DOES NOT APPLY TO THE PERFORMANCE OR DESIGN OF ANY OTHER PRODUCT OR COMPONENT FURNISHED BY VP EXCEPT TO ANY DESIGN OR PERFORMANCE REQUIREMENTS SPECIFIED BY VP.

THIS DRAWING, INCLUDING THE INFORMATION HEREON, REMAINS THE PROPERTY OF VP BUILDINGS. IT IS PROVIDED SOLELY FOR ERECTING THE BUILDING DESCRIBED IN THE APPLICABLE PURCHASE ORDER AND MAY BE REPRODUCED ONLY FOR THAT PURPOSE. IT SHALL NOT BE MODIFIED, REPRODUCED OR USED FOR ANY OTHER PURPOSE WITHOUT PRIOR WRITTEN APPROVAL OF VP BUILDINGS.

THE GENERAL CONTRACTOR AND/OR ERECTOR IS SOLELY RESPONSIBLE FOR ACCURATE GOOD QUALITY WORKMANSHIP IN ERECTING THIS BUILDING IN ACCORDANCE WITH THIS DRAWING, DETAILS REFERENCED IN THIS DRAWING, ALL APPLICABLE VP BUILDINGS ERECTION GUIDES, AND INDUSTRY STANDARDS PERTAINING TO PROPER ERECTION, INCLUDING THE CORRECT USE OF TEMPORARY BRACING.

D

VP Buildings
3200 Players Club Circle Memphis TN 38125

REV	DATE	BY	DESCRIPTION

NTS

FRAME CROSS SECTION AT FRAME LINE(S) 7

BUILDER	Rule Steel
CUSTOMER	
LOCATION	Clark, Colorado
PROJECT	DC Riding Arena
BUILDERS PO#	

VP BUILDINGS
VARCO PRUDEN
A BlueScope Steel Company
VPC VERSION: **2021.2a**

JOBNO	21-007748-01
DATE	09/08/2021
DRAWN/CHECK	SDA SDA
PAGE	14

MODIFIED IN AUTOCAD

FILENAME: E:\Divya selvaraj\CURRENT JOB\21-007748-01_permit\02 - OUTGOING\05 - PERMIT\CAD\14_DC Riding Arena Option 2_FRAME CROSS SECTION AT FRAME LINE(S) 7.dwg **SAVE DATE:** 9/8/2021 **SAVE TIME:** 15:45:42 **LAST SAVED BY:** dselvaraj

a division of BlueScope Buildings North America, Inc.

Frame Member Schedule

Part	Mem	Width	Thick	WebThk.	Depth1	Depth2	Approx.Lgth	Approx.Weight
CBX002	10001	5.0000	.1875	.1345	10"	10"	3'-11 1/4"	48#
CBX003	10002	5.0000	.1875	.1345	10"	10"	3'-11 13/16"	46#
CX012	1	10.0000	.7500	.3750	1'-3"	4'-0"	16'-0 3/16"	1666#
RBX024	2	8.0000	.7500	.3125	5'-0"	3'-6"	24'-2 1/16"	2181#
	3	8.0000	.7500	.1875	3'-6"	3'-6"		
RBX013	4	8.0000	.6250	.1875	3'-6"	2'-10"	35'-9 5/16"	2149#
	5	8.0000	.7500	.1875	2'-10"	1'-10"		
RBX025	6	8.0000	.7500	.1875	1'-10"	2'-10"	35'-9 1/8"	2149#
	7	8.0000	.6250	.1875	2'-10"	3'-6"		
RBX026	8	8.0000	.7500	.1875	3'-6"	3'-6"	24'-2 1/4"	2183#
	9	8.0000	.7500	.3125	3'-6"	5'-0"		
CX013	10	10.0000	.7500	.3750	1'-3"	4'-0"	16'-0 3/16"	1666#

Bolt Connection & Plate Schedule

Id	Qty	Grade	Bolt Dia.	Bolt Length	Plate Thick.	Rows Out	Rows In	PartNo
A	6	A325	1/2"	2"	3/8"	2	1	0097280
B	4	A325	1/2"	2"	1/4"	1	1	0097280
C	10	A325	7/8"	3 1/2"	3/4"	4	1	0097380
D	6	A325	3/4"	2 1/2"	3/8"	2	1	0097284
E	4	A325	3/4"	2 1/2"	3/8"	1	1	0097284

<S> - (2) Washers (095872) req'd at Flange Brace to Secondary.

Frame Clearances
Horiz. Clearance between members 1(CX012) and 10(CX013): 110'-6 11/16"
Vert. Clearance at member 1(CX012): 11'-3"
Vert. Clearance at member 10(CX013): 11'-3"
Finished Floor Elevation = 100'-0" (Unless Noted Otherwise)

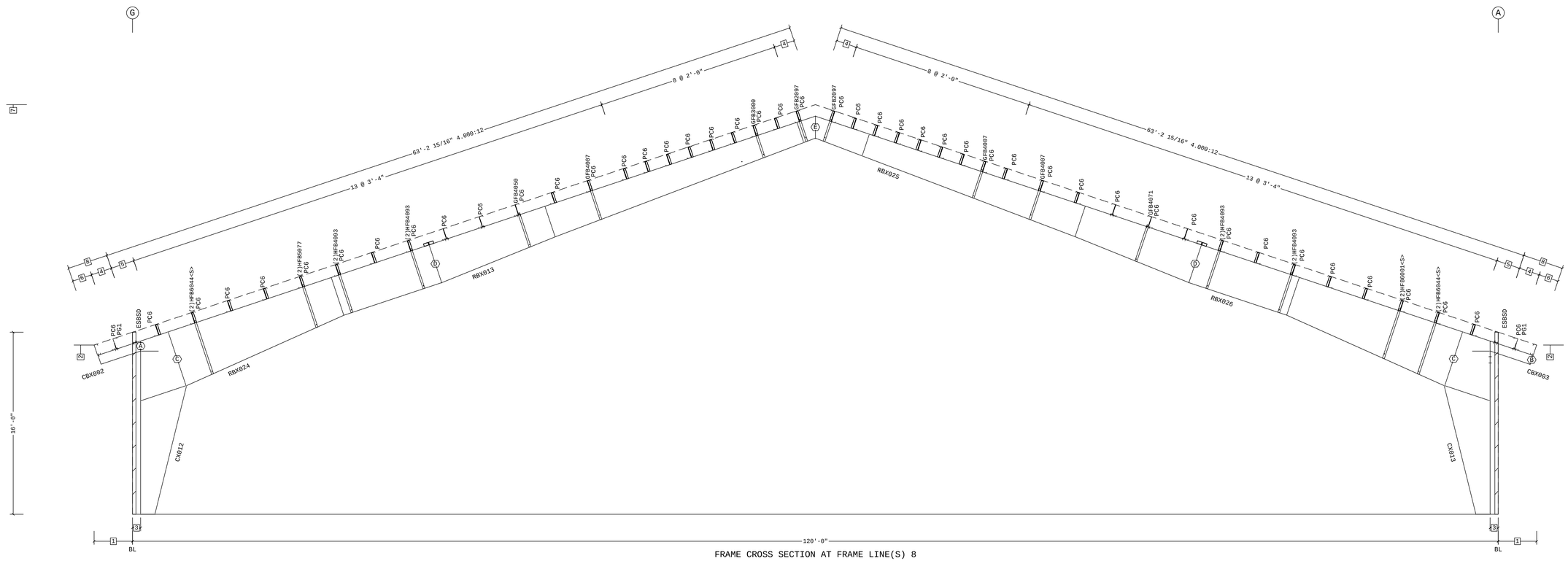

FRAME CROSS SECTION AT FRAME LINE(S) 8

8 3'-6 11/16" 4.000:12
7 36'-0" Ridge Ht.
6 1'-8 7/8"
5 2'-1 1/8"
4 1'-9 13/16"
3 8 1/2"
2 14'-10 1/2"
1 3'-4 1/2"
Dimension Key

REVIEWED FOR CODE COMPLIANCE 01/27/2022

COLORADO LICENSED MANUEL M. WUBE 0052792 PROFESSIONAL ENGINEER
09/10/2021

Shape Name = Riding Arena Wall 4, Frame 8

PERMIT SET- For Building Dept. Approval

1. USE 1/2 X 1 1/2 A325T BOLT (49080) AND NUT (47120) W/O WASHERS. SNUG TIGHTEN BOLTS FOR ALL SECONDARY CONNECTIONS, SECONDARY CLIP CONNECTIONS, AND FLANGE BRACE CONNECTIONS, UNLESS NOTED OTHERWISE.
2. SLOT REINFORCEMENT PLATES NEED NOT BE LOCATED ON THE SAME SIDE OF THE WEB AS THE HILLSIDE WASHER.

THE VP ENGINEER'S SEAL APPLIES ONLY TO THE WORK PRODUCT OF VP AND DESIGN AND PERFORMANCE REQUIREMENTS SPECIFIED BY VP. THE VP ENGINEER'S SEAL DOES NOT APPLY TO THE PERFORMANCE OR DESIGN OF ANY OTHER PRODUCT OR COMPONENT FURNISHED BY VP EXCEPT TO ANY DESIGN OR PERFORMANCE REQUIREMENTS SPECIFIED BY VP.

THIS DRAWING, INCLUDING THE INFORMATION HEREON, REMAINS THE PROPERTY OF VP BUILDINGS. IT IS PROVIDED SOLELY FOR ERECTING THE BUILDING DESCRIBED IN THE APPLICABLE PURCHASE ORDER AND MAY BE REPRODUCED ONLY FOR THAT PURPOSE. IT SHALL NOT BE MODIFIED, REPRODUCED OR USED FOR ANY OTHER PURPOSE WITHOUT PRIOR WRITTEN APPROVAL OF VP BUILDINGS.

THE GENERAL CONTRACTOR AND/OR ERECTOR IS SOLELY RESPONSIBLE FOR ACCURATE GOOD QUALITY WORKMANSHIP IN ERECTING THIS BUILDING IN ACCORDANCE WITH THIS DRAWING, DETAILS REFERENCED IN THIS DRAWING, ALL APPLICABLE VP BUILDINGS ERECTION GUIDES, AND INDUSTRY STANDARDS PERTAINING TO PROPER ERECTION, INCLUDING THE CORRECT USE OF TEMPORARY BRACING.

D

VP Buildings
3200 Players Club Circle Memphis TN 38125

REV	DATE	BY	DESCRIPTION

NTS

FRAME CROSS SECTION AT FRAME LINE(S) 8

BUILDER	Rule Steel
CUSTOMER	
LOCATION	Clark, Colorado
PROJECT	DC Riding Arena
BUILDERS PO#	

VP BUILDINGS VARCO PRUDEN
A BlueScope Steel Company
VPC VERSION: **2021.2a**

JOBNO	21-007748-01
DATE	09/08/2021
DRAWN/CHECK	SDA SDA
PAGE	15

a division of BlueScope Buildings North America, Inc.

MODIFIED IN AUTOCAD

FILENAME: E:\Divya selvaraj\CURRENT JOB\21-007748-01_permit\02 - OUTGOING\05 - PERMIT\CAD\15_DC Riding Arena Option 2_FRAME CROSS SECTION AT FRAME LINE(S) 8.dwg SAVE DATE: 9/8/2021 SAVE TIME: 15:45:45 LAST SAVED BY: dselvaraj

Frame Member Schedule

Part	Mem	Width	Thick	WebThk.	Depth1	Depth2	Approx.Lgth	Approx.Weight
CBX004	10001	5.0000	.1875	.1345	10"	10"	3'-11 1/4"	50#
CBX003	10002	5.0000	.1875	.1345	10"	10"	3'-11 13/16"	46#
CX014	1	10.0000	.7500	.3750	1'-3"	4'-0"	16'-0 3/16"	1682#
RBX027	2	8.0000	.7500	.3125	5'-0"	3'-6"	24'-2"	2228#
	3	8.0000	.7500	.1875	3'-6"	3'-6"		
RBX028	4	8.0000	.7500	.1875	3'-6"	2'-10"	35'-9 3/8"	2238#
	5	8.0000	.7500	.1875	2'-10"	1'-10"		
RBX029	6	8.0000	.7500	.1875	1'-10"	2'-10"	35'-9 1/8"	2237#
	7	8.0000	.7500	.1875	2'-10"	3'-6"		
RBX030	8	8.0000	.7500	.1875	3'-6"	3'-6"	24'-2 1/4"	2270#
	9	8.0000	.7500	.3125	3'-6"	5'-0"		
CX015	10	10.0000	.7500	.3750	1'-3"	4'-0"	16'-0 3/16"	1682#

Bolt Connection & Plate Schedule

Id	Qty	Grade	Bolt Dia.	Bolt Length	Plate Thick.	Rows Out	Rows In	PartNo
A	6	A325	1/2"	2"	1/2"	2	1	0097280
B	4	A325	1/2"	2"	1/4"	1	1	0097280
C	10	A325	7/8"	3 1/2"	3/4"	4	1	0097380
D	8	A325	3/4"	2 1/2"	3/8"	3	1	0097284
E	4	A325	7/8"	3 1/2"	3/8"	1	1	0097380

<S> - (2) Washers (095872) req'd at Flange Brace to Secondary.

Frame Clearances
Horiz. Clearance between members 1(CX014) and 10(CX015): 110'-6 11/16"
Vert. Clearance at member 1(CX014): 11'-3"
Vert. Clearance at member 10(CX015): 11'-3"
Finished Floor Elevation = 100'-0" (Unless Noted Otherwise)

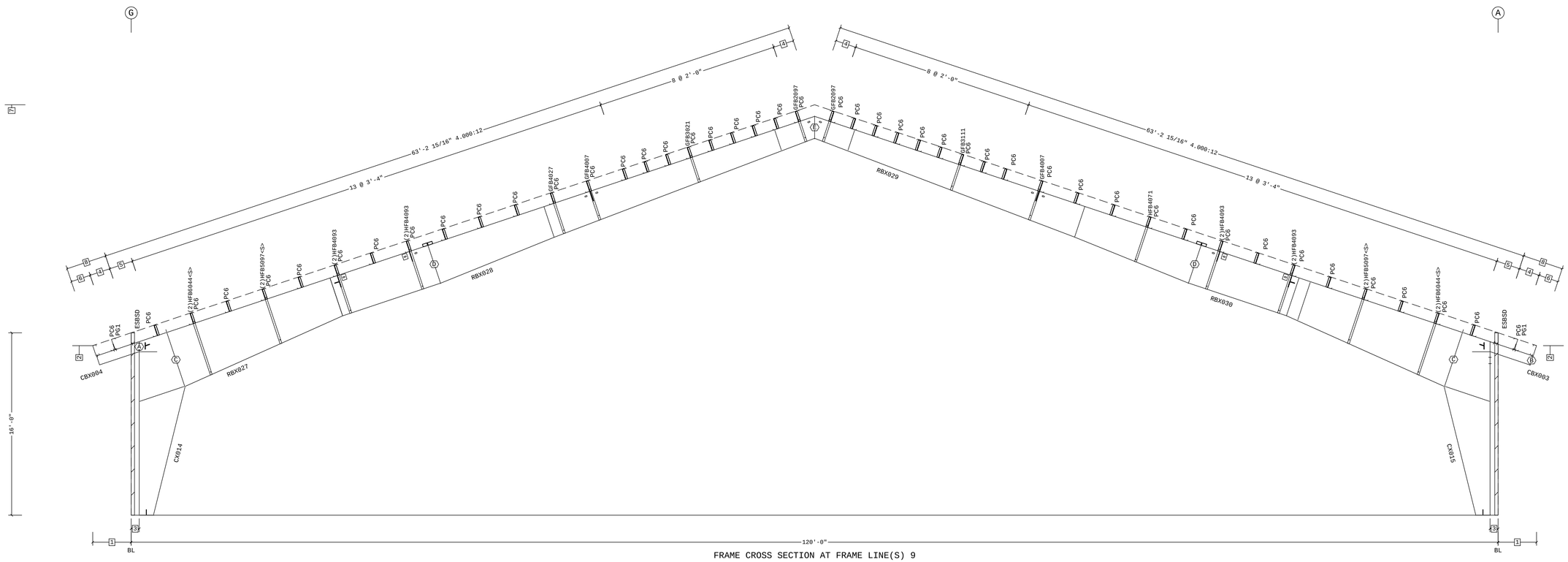

FRAME CROSS SECTION AT FRAME LINE(S) 9

8 3'-6 11/16" 4.000:12
7 36'-0" Ridge Ht.
6 1'-8 7/8"
5 2'-1 1/8"
4 1'-9 13/16"
3 8 1/2"
2 14'-10 1/2"
1 3'-4 1/2"
Dimension Key

REVIEWED FOR CODE COMPLIANCE
01/27/2022

COLORADO LICENSED
MANUEL M. WUBE
0052792
PROFESSIONAL ENGINEER
09/10/2021

Shape Name = Riding Arena Wall 4, Frame 9

PERMIT SET- For Building Dept. Approval

1. USE 1/2 X 1 1/2 A325T BOLT (49080) AND NUT (47120) W/O WASHERS. SNUG TIGHTEN BOLTS FOR ALL SECONDARY CONNECTIONS, SECONDARY CLIP CONNECTIONS, AND FLANGE BRACE CONNECTIONS, UNLESS NOTED OTHERWISE.
2. SLOT REINFORCEMENT PLATES NEED NOT BE LOCATED ON THE SAME SIDE OF THE WEB AS THE HILLSIDE WASHER.

THE VP ENGINEER'S SEAL APPLIES ONLY TO THE WORK PRODUCT OF VP AND DESIGN AND PERFORMANCE REQUIREMENTS SPECIFIED BY VP. THE VP ENGINEER'S SEAL DOES NOT APPLY TO THE PERFORMANCE OR DESIGN OF ANY OTHER PRODUCT OR COMPONENT FURNISHED BY VP EXCEPT TO ANY DESIGN OR PERFORMANCE REQUIREMENTS SPECIFIED BY VP.

THIS DRAWING, INCLUDING THE INFORMATION HEREON, REMAINS THE PROPERTY OF VP BUILDINGS. IT IS PROVIDED SOLELY FOR ERECTING THE BUILDING DESCRIBED IN THE APPLICABLE PURCHASE ORDER AND MAY BE REPRODUCED ONLY FOR THAT PURPOSE. IT SHALL NOT BE MODIFIED, REPRODUCED OR USED FOR ANY OTHER PURPOSE WITHOUT PRIOR WRITTEN APPROVAL OF VP BUILDINGS.

THE GENERAL CONTRACTOR AND/OR ERECTOR IS SOLELY RESPONSIBLE FOR ACCURATE GOOD QUALITY WORKMANSHIP IN ERECTING THIS BUILDING IN ACCORDANCE WITH THIS DRAWING, DETAILS REFERENCED IN THIS DRAWING, ALL APPLICABLE VP BUILDINGS ERECTION GUIDES, AND INDUSTRY STANDARDS PERTAINING TO PROPER ERECTION, INCLUDING THE CORRECT USE OF TEMPORARY BRACING.

D

VP Buildings
3200 Players Club Circle Memphis TN 38125

REV	DATE	BY	DESCRIPTION

NTS

FRAME CROSS SECTION AT FRAME LINE(S) 9

BUILDER Rule Steel
CUSTOMER
LOCATION Clark, Colorado
PROJECT DC Riding Arena
BUILDERS PO#

VP BUILDINGS
VARCO PRUDEN
A BlueScope Steel Company
VPC VERSION: 2021.2a

JOBNO 21-007748-01
DATE 09/08/2021
DRAWN/CHECK SDA SDA
PAGE 16

a division of BlueScope Buildings North America, Inc.

MODIFIED IN AUTOCAD

FILENAME: E:\Divya selvaraj\CURRENT JOB\21-007748-01_permit\02 - OUTGOING\05 - PERMIT\CAD\16_DC Riding Arena Option 2_FRAME CROSS SECTION AT FRAME LINE(S) 9.dwg SAVE DATE: 9/8/2021 SAVE TIME: 15:45:49 LAST SAVED BY: dselvaraj

Frame Member Schedule

Part	Mem	Width	Thick	WebThk.	Depth1	Depth2	Approx.Lgth	Approx.Weight
CBX004	10001	5.0000	.1875	.1345	10"	10"	3'-11 1/4"	50#
CBX003	10002	5.0000	.1875	.1345	10"	10"	3'-11 13/16"	46#
CX016	1	10.0000	.7500	.3750	1'-3"	4'-0"	16'-0 3/16"	1699#
RBX031	2	8.0000	.7500	.3125	5'-0"	3'-6"	24'-2"	2228#
	3	8.0000	.7500	.1875	3'-6"	3'-6"		
RBX032	4	8.0000	.7500	.1875	3'-6"	2'-10"	35'-9 3/8"	2238#
	5	8.0000	.7500	.1875	2'-10"	1'-10"		
RBX033	6	8.0000	.7500	.1875	1'-10"	2'-10"	35'-9 1/8"	2237#
	7	8.0000	.7500	.1875	2'-10"	3'-6"		
RBX034	8	8.0000	.7500	.1875	3'-6"	3'-6"	24'-2 1/4"	2270#
	9	8.0000	.7500	.3125	3'-6"	5'-0"		
CX017	10	10.0000	.7500	.3750	1'-3"	4'-0"	16'-0 3/16"	1699#

Bolt Connection & Plate Schedule

Id	Qty	Grade	Bolt Dia.	Bolt Length	Plate Thick.	Rows Out	Rows In	PartNo
A	6	A325	1/2"	2"	1/2"	2	1	0097280
B	4	A325	1/2"	2"	1/4"	1	1	0097280
C	10	A325	7/8"	3 1/2"	3/4"	4	1	0097380
D	8	A325	3/4"	2 1/2"	3/8"	3	1	0097284
E	4	A325	7/8"	3 1/2"	3/8"	1	1	0097380

<S> - (2) Washers (095872) req'd at Flange Brace to Secondary.

Frame Clearances
Horiz. Clearance between members 1(CX016) and 10(CX017): 110'-6 11/16"
Vert. Clearance at member 1(CX016): 11'-3"
Vert. Clearance at member 10(CX017): 11'-3"
Finished Floor Elevation = 100'-0" (Unless Noted Otherwise)

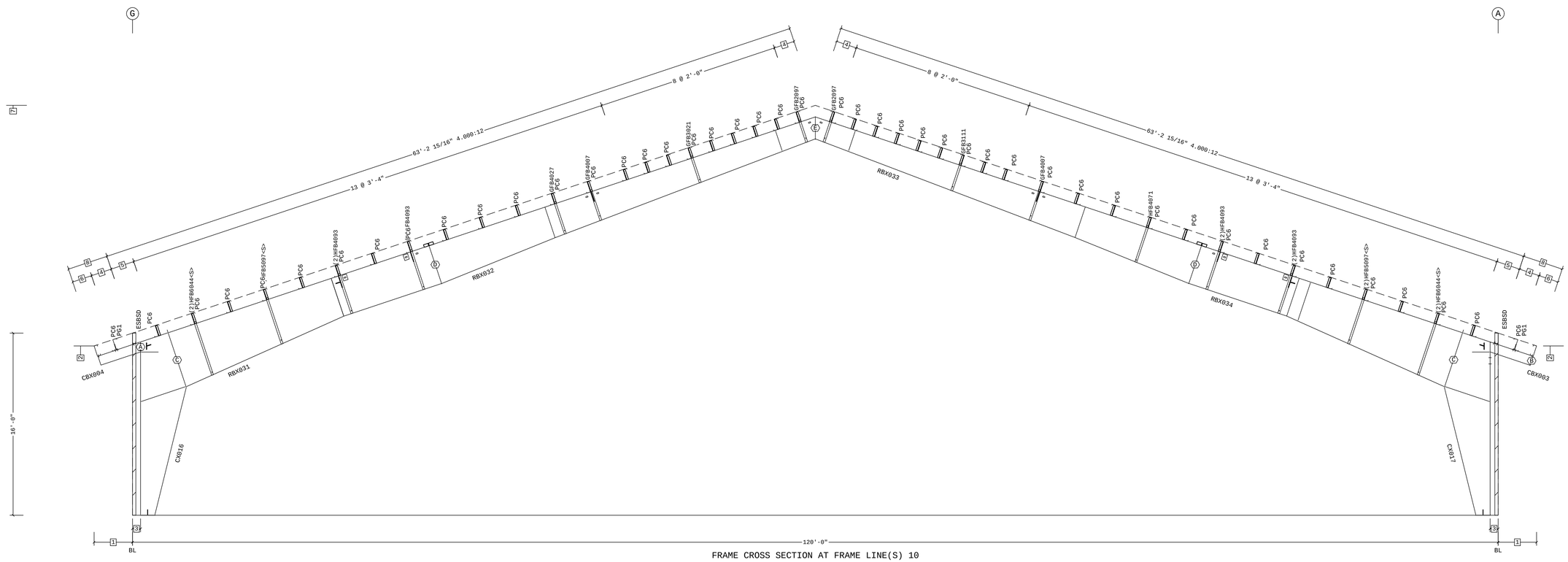

FRAME CROSS SECTION AT FRAME LINE(S) 10

8 3'-6 11/16" 4.000:12
7 36'-0" Ridge Ht.
6 1'-8 7/8"
5 2'-1 1/8"
4 1'-9 13/16"
3 8 1/2"
2 14'-10 1/2"
1 3'-4 1/2"
Dimension Key

REVIEWED FOR CODE COMPLIANCE 01/27/2022

COLORADO LICENSED EMANUEL M. WEBER 0052792 PROFESSIONAL ENGINEER
09/10/2021

PERMIT SET- For Building Dept. Approval

Shape Name = Riding Arena Wall 4, Frame 10

1. USE 1/2 X 1 1/2 A325T BOLT (49080) AND NUT (47120) W/O WASHERS. SNUG TIGHTEN BOLTS FOR ALL SECONDARY CONNECTIONS, SECONDARY CLIP CONNECTIONS, AND FLANGE BRACE CONNECTIONS, UNLESS NOTED OTHERWISE.
2. SLOT REINFORCEMENT PLATES NEED NOT BE LOCATED ON THE SAME SIDE OF THE WEB AS THE HILLSIDE WASHER.

THE VP ENGINEER'S SEAL APPLIES ONLY TO THE WORK PRODUCT OF VP AND DESIGN AND PERFORMANCE REQUIREMENTS SPECIFIED BY VP. THE VP ENGINEER'S SEAL DOES NOT APPLY TO THE PERFORMANCE OR DESIGN OF ANY OTHER PRODUCT OR COMPONENT FURNISHED BY VP EXCEPT TO ANY DESIGN OR PERFORMANCE REQUIREMENTS SPECIFIED BY VP.

THIS DRAWING, INCLUDING THE INFORMATION HEREON, REMAINS THE PROPERTY OF VP BUILDINGS. IT IS PROVIDED SOLELY FOR ERECTING THE BUILDING DESCRIBED IN THE APPLICABLE PURCHASE ORDER AND MAY BE REPRODUCED ONLY FOR THAT PURPOSE. IT SHALL NOT BE MODIFIED, REPRODUCED OR USED FOR ANY OTHER PURPOSE WITHOUT PRIOR WRITTEN APPROVAL OF VP BUILDINGS.

THE GENERAL CONTRACTOR AND/OR ERECTOR IS SOLELY RESPONSIBLE FOR ACCURATE GOOD QUALITY WORKMANSHIP IN ERECTING THIS BUILDING IN ACCORDANCE WITH THIS DRAWING, DETAILS REFERENCED IN THIS DRAWING, ALL APPLICABLE VP BUILDINGS ERECTION GUIDES, AND INDUSTRY STANDARDS PERTAINING TO PROPER ERECTION, INCLUDING THE CORRECT USE OF TEMPORARY BRACING.

D

VP Buildings
3200 Players Club Circle Memphis TN 38125

REV	DATE	BY	DESCRIPTION

NTS

FRAME CROSS SECTION AT FRAME LINE(S) 10

BUILDER	Rule Steel
CUSTOMER	
LOCATION	Clark, Colorado
PROJECT	DC Riding Arena
BUILDERS PO#	

VP BUILDINGS VARCO PRUDEN
A BlueScope Steel Company
VPC VERSION: 2021.2a

JOBNO	21-007748-01
DATE	09/08/2021
DRAWN/CHECK	SDA SDA
PAGE	17

a division of BlueScope Buildings North America, Inc.

MODIFIED IN AUTOCAD

FILENAME: E:\Divya selvaraj\CURRENT JOB\21-007748-01_permit\02 - OUTGOING\05 - PERMIT\CAD\17_DC Riding Arena Option 2_FRAME CROSS SECTION AT FRAME LINE(S) 10.dwg SAVE DATE: 9/8/2021 SAVE TIME: 15:45:52 LAST SAVED BY: dselvaraj

Frame Member Schedule

Part	Mem	Width	Thick	WebThk.	Depth1	Depth2	Approx.Lgth	Approx.Weight
CBX002	10001	5.0000	.1875	.1345	10"	10"	3'-11 1/4"	48#
CBX003	10002	5.0000	.1875	.1345	10"	10"	3'-11 13/16"	46#
CX005	1	10.0000	.7500	.3750	1'-3"	4'-0"	16'-0 3/16"	1689#
RBX012	2	8.0000	.7500	.3125	5'-0"	3'-6"	24'-2 1/16"	2208#
	3	8.0000	.7500	.1875	3'-6"	3'-6"		
RBX013	4	8.0000	.6250	.1875	3'-6"	2'-10"	35'-9 5/16"	2149#
	5	8.0000	.7500	.1875	2'-10"	1'-10"		
RBX014	6	8.0000	.7500	.1875	1'-10"	2'-10"	35'-9 1/8"	2149#
	7	8.0000	.6250	.1875	2'-10"	3'-6"		
RBX015	8	8.0000	.7500	.1875	3'-6"	3'-6"	24'-2 1/4"	2250#
	9	8.0000	.7500	.3125	3'-6"	5'-0"		
CX005	10	10.0000	.7500	.3750	1'-3"	4'-0"	16'-0 3/16"	1689#

Bolt Connection & Plate Schedule

Id	Qty	Grade	Bolt Dia.	Bolt Length	Plate Thick.	Rows Out	Rows In	PartNo
A	6	A325	1/2"	2"	3/8"	2	1	0097280
B	4	A325	1/2"	2"	1/4"	1	1	0097280
C	10	A325	1"	3 1/2"	3/4"	4	1	0097288
D	6	A325	3/4"	2 1/2"	3/8"	2	1	0097284
E	4	A325	3/4"	2 1/2"	3/8"	1	1	0097284

<S> - (2) Washers (095872) req'd at Flange Brace to Secondary.

Frame Clearances
Horiz. Clearance between members 1(CX005) and 10(CX005): 110'-6 11/16"
Vert. Clearance at member 1(CX005): 11'-3"
Vert. Clearance at member 10(CX005): 11'-3"
Finished Floor Elevation = 100'-0" (Unless Noted Otherwise)

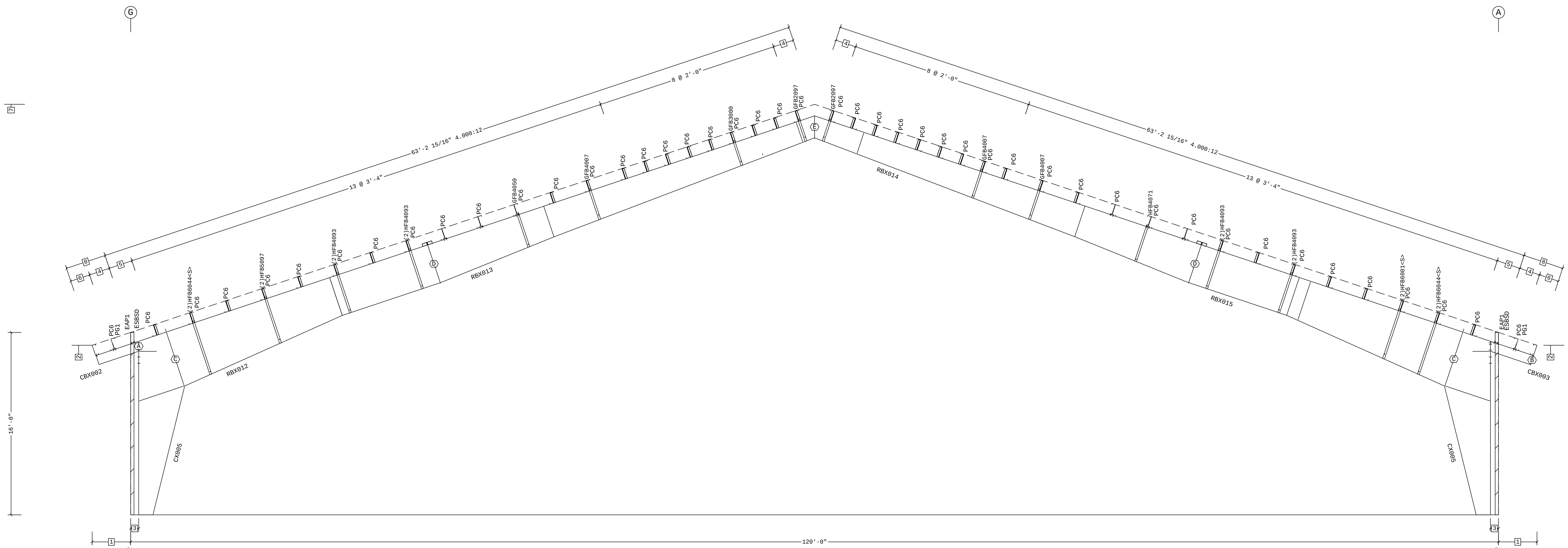

FRAME CROSS SECTION AT FRAME LINE(S) 11

8	3'-6 11/16" 4.000:12
7	36'-0" Ridge Ht.
6	1'-8 7/8"
5	2'-1 1/8"
4	1'-9 13/16"
3	8 1/2"
2	14'-10 1/2"
1	3'-4 1/2"

☐ Dimension Key

Shape Name = Riding Arena Wall 4, Frame 11

REVIEWED FOR CODE COMPLIANCE 01/27/2022

COLORADO LICENSED PROFESSIONAL ENGINEER MANUEL M. WIRNER 0052792

09/10/2021

PERMIT SET- For Building Dept. Approval

1. USE 1/2 X 1 1/2 A325T BOLT (49080) AND NUT (47120) W/O WASHERS. SNUG TIGHTEN BOLTS FOR ALL SECONDARY CONNECTIONS, SECONDARY CLIP CONNECTIONS, AND FLANGE BRACE CONNECTIONS, UNLESS NOTED OTHERWISE.
2. SLOT REINFORCEMENT PLATES NEED NOT BE LOCATED ON THE SAME SIDE OF THE WEB AS THE HILLSIDE WASHER.

THE VP ENGINEER'S SEAL APPLIES ONLY TO THE WORK PRODUCT OF VP AND DESIGN AND PERFORMANCE REQUIREMENTS SPECIFIED BY VP. THE VP ENGINEER'S SEAL DOES NOT APPLY TO THE PERFORMANCE OR DESIGN OF ANY OTHER PRODUCT OR COMPONENT FURNISHED BY VP EXCEPT TO ANY DESIGN OR PERFORMANCE REQUIREMENTS SPECIFIED BY VP.

THIS DRAWING, INCLUDING THE INFORMATION HEREON, REMAINS THE PROPERTY OF VP BUILDINGS. IT IS PROVIDED SOLELY FOR ERECTING THE BUILDING DESCRIBED IN THE PURCHASE ORDER AND MAY BE REPRODUCED ONLY FOR THAT PURPOSE. IT SHALL NOT BE MODIFIED, REPRODUCED OR USED FOR ANY OTHER PURPOSE WITHOUT PRIOR WRITTEN APPROVAL OF VP BUILDINGS.

THE GENERAL CONTRACTOR AND/OR ERECTOR IS SOLELY RESPONSIBLE FOR ACCURATE GOOD QUALITY WORKMANSHIP IN ERECTING THIS BUILDING IN ACCORDANCE WITH THIS DRAWING, DETAILS REFERENCED IN THIS DRAWING, ALL APPLICABLE VP BUILDINGS ERECTION GUIDES, AND INDUSTRY STANDARDS PERTAINING TO PROPER ERECTION, INCLUDING THE CORRECT USE OF TEMPORARY BRACING.

D

VP Buildings
3200 Players Club Circle Memphis TN 38125

REV	DATE	BY	DESCRIPTION

NTS

FRAME CROSS SECTION AT FRAME LINE(S) 11

BUILDER	Rule Steel
CUSTOMER	
LOCATION	Clark, Colorado
PROJECT	DC Riding Arena
BUILDERS PO#	

VP BUILDINGS VARCO PRUDEN
A BlueScope Steel Company
VPC VERSION: 2021.2a

JOBNO	21-007748-01
DATE	09/08/2021
DRAWN/CHECK	SDA SDA
PAGE	18

MODIFIED IN AUTOCAD

FILENAME: E:\Divya selvaraj\CURRENT JOB\21-007748-01_permit\02 - OUTGOING\05 - PERMIT\CAD\18_DC Riding Arena Option 2_FRAME CROSS SECTION AT FRAME LINE(S) 11.dwg

SAVE DATE: 9/8/2021 SAVE TIME: 15:45:56 LAST SAVED BY: dselvaraj

a division of BlueScope Buildings North America, Inc.

Frame Member Schedule

Part	Mem	Width	Thick	WebThk.	Depth1	Depth2	Approx.Lgth	Approx.Weight
CBX002	10001	5.0000	.1875	.1345	10"	10"	3'-11 1/4"	48#
CBX002	10002	5.0000	.1875	.1345	10"	10"	3'-11 1/4"	48#
CX004	1	10.0000	.7500	.3125	1'-3"	4'-0"	16'-0 1/2"	1582#
RBX035	2	8.0000	.7500	.3125	4'-9"	3'-5"	24'-1 3/16"	2078#
	3	8.0000	.6250	.1875	3'-5"	3'-5"		
RBX036	4	8.0000	.6250	.1875	3'-5"	2'-10"	35'-9 1/4"	1951#
	5	8.0000	.6250	.1875	2'-10"	1'-10"		
RBX037	6	8.0000	.6250	.1875	1'-10"	2'-10"	35'-9 1/8"	1946#
	7	8.0000	.6250	.1875	2'-10"	3'-5"		
RBX038	8	8.0000	.6250	.1875	3'-5"	3'-5"	24'-1 5/16"	2079#
	9	8.0000	.7500	.3125	3'-5"	4'-9"		
CX003	10	10.0000	.7500	.3125	1'-3"	4'-0"	16'-0 1/2"	1582#

Bolt Connection & Plate Schedule

Id	Qty	Grade	Bolt Dia.	Bolt Length	Plate Thick.	Rows Out	Rows In	PartNo
A	6	A325	1/2"	2"	3/8"	2	1	0097280
B	10	A325	7/8"	3 1/2"	3/4"	4	1	0097380
C	10	A325	3/4"	2 1/2"	3/8"	2	1	0097284
D	4	A325	3/4"	2 1/2"	3/8"	1	1	0097284

<S> - (2) Washers (095872) req'd at Flange Brace to Secondary.

Frame Clearances
Horiz. Clearance between members 1(CX004) and 10(CX003): 110'-6 11/16"
Vert. Clearance at member 1(CX004): 11'-6 1/8"
Vert. Clearance at member 10(CX003): 11'-6 1/8"
Finished Floor Elevation = 100'-0" (Unless Noted Otherwise)

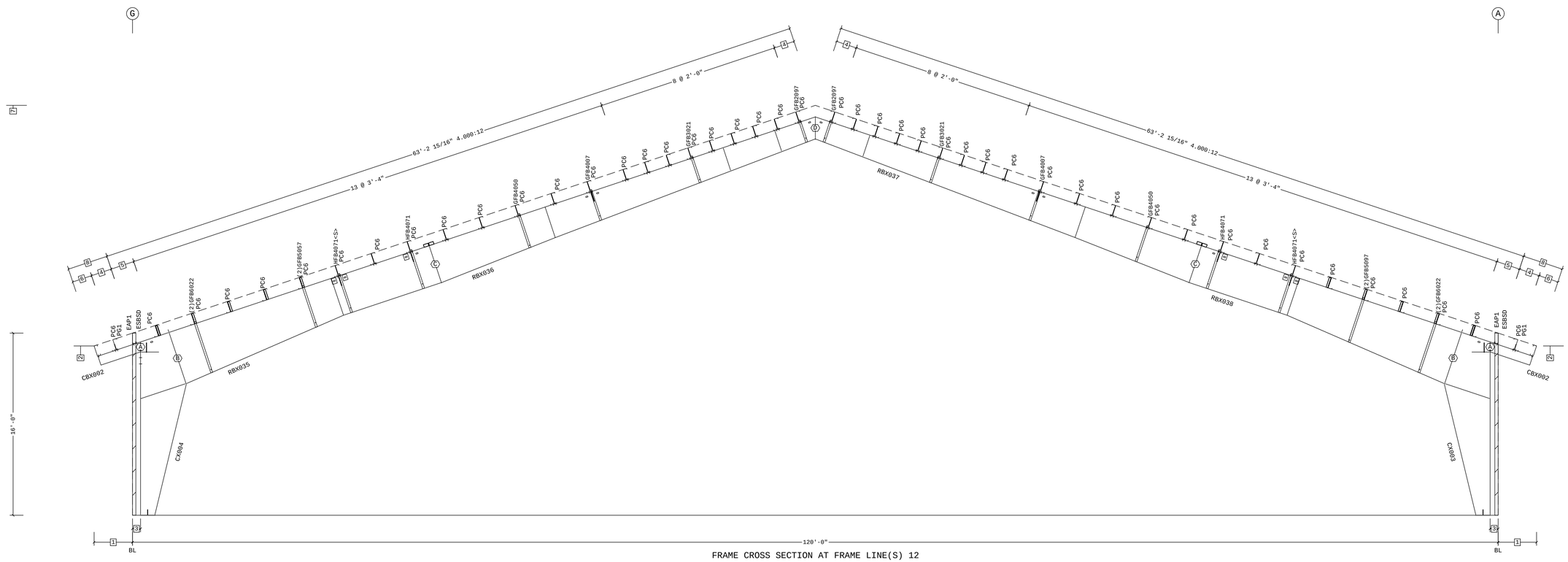

FRAME CROSS SECTION AT FRAME LINE(S) 12

8 3'-6 11/16" 4.000:12
7 36'-0" Ridge Ht.
6 1'-8 7/8"
5 2'-1 1/8"
4 1'-9 13/16"
3 8 1/2"
2 14'-10 1/2"
1 3'-4 1/2"
Dimension Key

REVIEWED FOR CODE COMPLIANCE 01/27/2022

COLORADO LICENSED EMANUEL M. WEBER 0052792 PROFESSIONAL ENGINEER
09/10/2021

Shape Name = Riding Arena Wall 4, Frame 12

PERMIT SET- For Building Dept. Approval

1. USE 1/2 X 1 1/2 A325T BOLT (49080) AND NUT (47120) W/O WASHERS. SNUG TIGHTEN BOLTS FOR ALL SECONDARY CONNECTIONS, SECONDARY CLIP CONNECTIONS, AND FLANGE BRACE CONNECTIONS, UNLESS NOTED OTHERWISE.
2. SLOT REINFORCEMENT PLATES NEED NOT BE LOCATED ON THE SAME SIDE OF THE WEB AS THE HILLSIDE WASHER.

THE VP ENGINEER'S SEAL APPLIES ONLY TO THE WORK PRODUCT OF VP AND DESIGN AND PERFORMANCE REQUIREMENTS SPECIFIED BY VP. THE VP ENGINEER'S SEAL DOES NOT APPLY TO THE PERFORMANCE OR DESIGN OF ANY OTHER PRODUCT OR COMPONENT FURNISHED BY VP EXCEPT TO ANY DESIGN OR PERFORMANCE REQUIREMENTS SPECIFIED BY VP.

THIS DRAWING, INCLUDING THE INFORMATION HEREON, REMAINS THE PROPERTY OF VP BUILDINGS. IT IS PROVIDED SOLELY FOR ERECTING THE BUILDING DESCRIBED IN THE APPLICABLE PURCHASE ORDER AND MAY BE REPRODUCED ONLY FOR THAT PURPOSE. IT SHALL NOT BE MODIFIED, REPRODUCED OR USED FOR ANY OTHER PURPOSE WITHOUT PRIOR WRITTEN APPROVAL OF VP BUILDINGS.

THE GENERAL CONTRACTOR AND/OR ERECTOR IS SOLELY RESPONSIBLE FOR ACCURATE GOOD QUALITY WORKMANSHIP IN ERECTING THIS BUILDING IN ACCORDANCE WITH THIS DRAWING, DETAILS REFERENCED IN THIS DRAWING, ALL APPLICABLE VP BUILDINGS ERECTION GUIDES, AND INDUSTRY STANDARDS PERTAINING TO PROPER ERECTION, INCLUDING THE CORRECT USE OF TEMPORARY BRACING.

D

VP Buildings
3200 Players Club Circle Memphis TN 38125

REV	DATE	BY	DESCRIPTION

NTS

FRAME CROSS SECTION AT FRAME LINE(S) 12

BUILDER	Rule Steel
CUSTOMER	
LOCATION	Clark, Colorado
PROJECT	DC Riding Arena
BUILDERS PO#	

VP BUILDINGS VARCO PRUDEN
A BlueScope Steel Company
VPC VERSION: 2021.2a

JOBNO	21-007748-01
DATE	09/08/2021
DRAWN/CHECK	SDA SDA
PAGE	19

a division of BlueScope Buildings North America, Inc.

MODIFIED IN AUTOCAD

FILENAME: E:\Divya selvaraj\CURRENT JOB\21-007748-01_permit\02 - OUTGOING\05 - PERMIT\CAD\19_DC Riding Arena Option 2_FRAME CROSS SECTION AT FRAME LINE(S) 12.dwg SAVE DATE: 9/9/2021 SAVE TIME: 10:02:28 LAST SAVED BY: dselvaraj

Frame Member Schedule

Part	Mem	Width	Thick	WebThk.	Depth1	Depth2	Approx.Lgth	Approx.Weight	Detail
CBX001	10002	5.0000	.1875	.1345	10"	10"	3'-11 1/4"	48#	
CBX003	10001	5.0000	.1875	.1345	10"	10"	3'-11 13/16"	46#	
CX018	1	6.0000	.5000	.2500	1'-6"	1'-6"	15'-5 11/16"	573#	
RBX039	2	5.0000	.3750	.1644	2'-2"	1'-0"	8'-7 11/16"	244#	
RBX040	3-4	5.0000	.3750	.1644	1'-0"	1'-0"	23'-2"	491#	
RBX041	5	5.0000	.3750	.1644	1'-0"	1'-0"	23'-4"	476#	
	6	5.0000	.3750	.1644	1'-0"	9"			
RBX004	7	5.0000	.3750	.1644	9"	2'-7 1/2"	13'-0"	339#	
	8	5.0000	.3750	.1644	2'-7 1/2"	9"			
RBX042	9	5.0000	.3750	.1644	9"	1'-0"	23'-4"	476#	
	10	5.0000	.3750	.1644	1'-0"	1'-0"			
RBX043	11-12	5.0000	.3750	.1644	1'-0"	1'-0"	22'-0"	467#	
RBX044	13	5.0000	.3750	.1644	1'-0"	2'-2"	9'-9 11/16"	271#	
CX019	14	6.0000	.5000	.2500	1'-6"	1'-6"	15'-5 11/16"	577#	
EPX005	15	6.0000	.3750	.1644	10"	10"	20'-8 1/4"	441#	BR25CA
EPX004	16	8.0000	.3750	.1644	10"	10"	27'-4 9/16"	720#	BR25A3
EPX003	17	9.0000	.3750	.2500	10"	10"	32'-2 11/16"	1015#	
EPX002	18	8.0000	.3750	.1644	10"	10"	27'-4 9/16"	720#	BR25A3
EPX001	19	6.0000	.3750	.1644	10"	10"	20'-8 1/4"	441#	BR25CA

Bolt Connection & Plate Schedule

Id	Qty	Grade	Bolt Dia.	Bolt Length	Plate Thick.	Rows Out	Rows In	PartNo
A	4	A325	1/2"	2"	3/8"	1	1	0097280
B	4	A325	1/2"	1 1/2"	1/4"	1	1	49080
C	10	A325	3/4"	2 1/2"	1/2"	2	3	0097284
D	8	A325	3/4"	2 1/2"	3/8"	2	2	0097284
E	6	A325	3/4"	2 1/2"	3/8"	1	2	0097284
F	6	A325	3/4"	2 1/2"	1/2"	2	1	0097284
G	10	A325	3/4"	2 1/2"	1/2"	3	2	0097284
J	4	A325	1/2"	1 1/2"	3/8"	1	1	49080

<S> - (2) Washers (095872) req'd at Flange Brace to Secondary.

Frame Clearances
Horiz. Clearance between members 1(CX018) and 14(CX019): 115'-6"
Vert. Clearance at member 1(CX018): 13'-4 13/16"
Vert. Clearance at member 14(CX019): 13'-2 11/16"
Vert. Clearance at member 15(EPX005): 20'-7 1/4"
Vert. Clearance at member 16(EPX004): 27'-3 1/4"
Vert. Clearance at member 17(EPX003): 32'-2 11/16"
Vert. Clearance at member 18(EPX002): 27'-3 1/4"
Vert. Clearance at member 19(EPX001): 20'-7 1/4"
Finished Floor Elevation = 100'-0" (Unless Noted Otherwise)

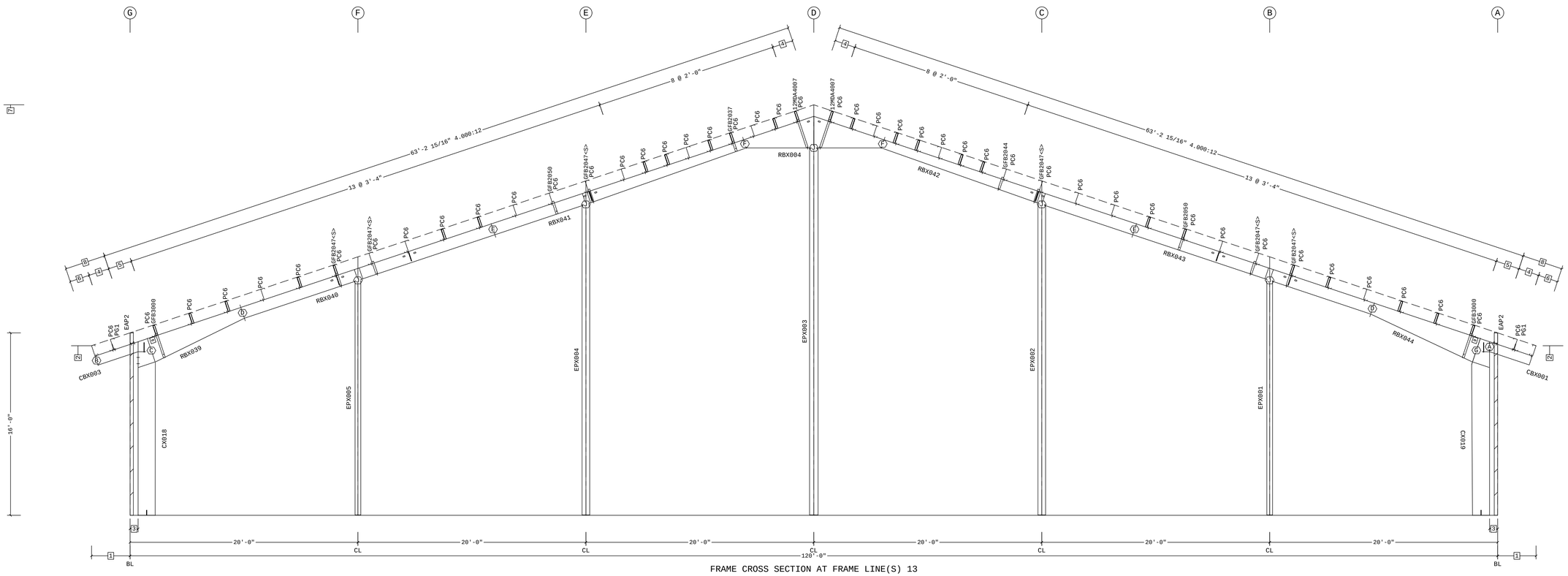

FRAME CROSS SECTION AT FRAME LINE(S) 13

8 3'-6 11/16" 4.000:12
7 36'-0" Ridge Ht.
6 1'-8 7/8"
5 2'-1 1/8"
4 1'-9 13/16"
3 8 1/2"
2 14'-10 1/2"
1 3'-4 1/2"
Dimension Key

REVIEWED FOR CODE COMPLIANCE
01/27/2022

COLORADO LICENSED
MANUEL M. WUBNEH
0052792
PROFESSIONAL ENGINEER

09/10/2021

PERMIT SET- For Building Dept. Approval

Shape Name = Riding Arena Wall 4, Frame 13

1. USE 1/2 X 1 1/2 A325T BOLT (49080) AND NUT (47120) W/O WASHERS. SNUG TIGHTEN BOLTS FOR ALL SECONDARY CONNECTIONS, SECONDARY CLIP CONNECTIONS, AND FLANGE BRACE CONNECTIONS, UNLESS NOTED OTHERWISE.
2. SLOT REINFORCEMENT PLATES NEED NOT BE LOCATED ON THE SAME SIDE OF THE WEB AS THE HILLSIDE WASHER.

THE VP ENGINEER'S SEAL APPLIES ONLY TO THE WORK PRODUCT OF VP AND DESIGN AND PERFORMANCE REQUIREMENTS SPECIFIED BY VP. THE VP ENGINEER'S SEAL DOES NOT APPLY TO THE PERFORMANCE OR DESIGN OF ANY OTHER PRODUCT OR COMPONENT FURNISHED BY VP EXCEPT TO ANY DESIGN OR PERFORMANCE REQUIREMENTS SPECIFIED BY VP.

THIS DRAWING, INCLUDING THE INFORMATION HEREON, REMAINS THE PROPERTY OF VP BUILDINGS. IT IS PROVIDED SOLELY FOR ERECTING THE BUILDING DESCRIBED IN THE APPLICABLE PURCHASE ORDER AND MAY BE REPRODUCED ONLY FOR THAT PURPOSE. IT SHALL NOT BE MODIFIED, REPRODUCED OR USED FOR ANY OTHER PURPOSE WITHOUT PRIOR WRITTEN APPROVAL OF VP BUILDINGS.

THE GENERAL CONTRACTOR AND/OR ERECTOR IS SOLELY RESPONSIBLE FOR ACCURATE GOOD QUALITY WORKMANSHIP IN ERECTING THIS BUILDING IN ACCORDANCE WITH THIS DRAWING, DETAILS REFERENCED IN THIS DRAWING, ALL APPLICABLE VP BUILDINGS ERECTION GUIDES, AND INDUSTRY STANDARDS PERTAINING TO PROPER ERECTION, INCLUDING THE CORRECT USE OF TEMPORARY BRACING.

D

VP Buildings
3200 Players Club Circle Memphis TN 38125

REV	DATE	BY	DESCRIPTION

NTS

FRAME CROSS SECTION AT FRAME LINE(S) 13

BUILDER	Rule Steel
CUSTOMER	
LOCATION	Clark, Colorado
PROJECT	DC Riding Arena
BUILDERS PO#	

VP BUILDINGS
VARCO PRUDEN
A BlueScope Steel Company
VPC VERSION: **2021.2a**

JOBNO	21-07748-01
DATE	09/08/2021
DRAWN/CHECK	SDA SDA
PAGE	20

MODIFIED IN AUTOCAD

FILENAME: **E:\Divya selvaraj\CURRENT JOB\21-007748-01_permit\02 - OUTGOING\05 - PERMIT\CAD\20_DC Riding Arena Option 2_FRAME CROSS SECTION AT FRAME LINE(S) 13.dwg** SAVE DATE: 9/8/2021 SAVE TIME: 15:46:03 LAST SAVED BY: dselvaraj

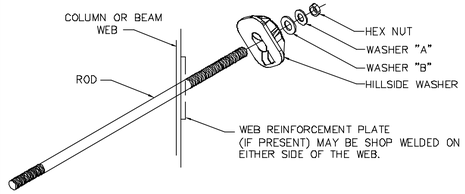

DESCRIPTION/PART NO				
ROD DIAM	NUT	HARD STEEL ROUND WASHER A	HARD STEEL WASHER B	HILLSIDE WASHER
3/8"	95321	3/8" FLAT WASHER (96408)	1/2" BEVEL SQUARE WASHER (46040)	543334
1/2"	95230	1/2" FLAT WASHER (95872)	3/4" FLAT ROUND WASHER (95946)	
5/8"	95233	5/8" FLAT WASHER (95945)		
3/4"	95235	3/4" FLAT WASHER (95946)	1" FLAT ROUND WASHER (95948)	543335
7/8"	95237	7/8" FLAT WASHER (95947)		
1"	95238	1" FLAT WASHER (95948)	1 1/8" FLAT ROUND WASHER (95949)	543336
1 1/8"	95239	1 1/8" FLAT WASHER (95949)		

REV. DATE:08/02/17 | REV. NO. 04
BR01G2 — ROD BRACE
WEB SLOT ASSEMBLY

ROD DIA.	CLEVIS MARK NO.	CLEVIS PIN DIA.
3/8"	097572	1 1/4"
1/2"	097573	
5/8"	095277	
3/4"	095278	
7/8"	095279	
1"	095280	
1 1/8"	095281	
1 1/4"	095282	
1 3/8"	097593	1 1/2"
1 1/2"	097594	

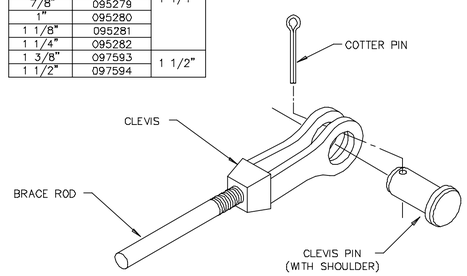

MAY BE FURNISHED WITHOUT A SHOULDER, THEN TWO COTTER PIN WILL BE PROVIDED.

REV. DATE:06/23/11 | REV. NO. 03
BR02K1 — ROD BRACING
CLEVIS ASSEMBLY

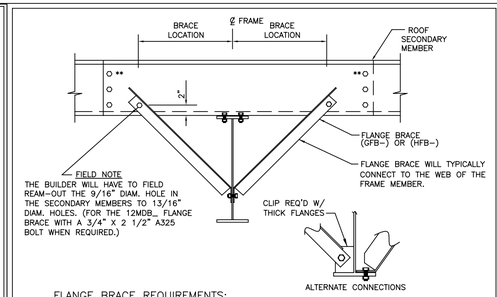

FLANGE BRACE REQUIREMENTS:

RULE#1– ALL FLANGE BRACES ON CROSS SECTIONS MUST BE INSTALLED.
RULE#2– SINGLE FLANGE BRACES ARE REQUIRED WHEN PART MARK ON CROSS SECTION IS NOT ACCOMPANIED BY (2).
RULE#3– FLANGE BRACES ARE REQUIRED BOTH SIDES OF THE FRAME WEB WHEN PART MARK IS ACCOMPANIED BY (2).
RULE#4– WHENEVER POSSIBLE, PLACE SINGLE BRACES TOWARD THE CENTER OF THE BUILDING.
RULE#5– WHENEVER POSSIBLE, PLACE ALL SINGLE BRACES ON THE SAME SIDE OF THE FRAME WEB.

** 10" & 11 1/2" PURLINS REQUIRE 3 BOLTS AT EACH END OF PURLIN LAP.

REV. DATE:05/08/18 | REV. NO. 02
BR06AE — TYPICAL FLANGE BRACE CONNECTIONS
CONT. PURLIN LAP SHOWN, CONT. GIRT & SIMPLE PURLIN

SEE ERECTION DRAWINGS FOR LOCATIONS AND PART MARKS

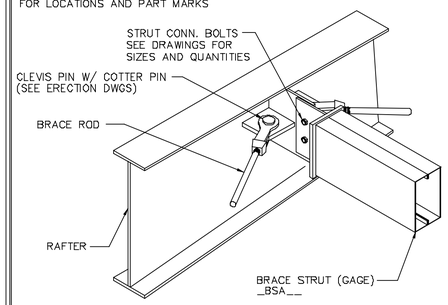

WHERE SLOTTED HOLES ARE PRESENT, BOLTS ARE SLIP CRITICAL AND MUST BE FULLY PRE TENSIONED. FAYING SURFACES MUST BE PAINT FREE. IF PAINT IS FOUND ON FAYING SURFACES IN SLOTTED CONNECTIONS REMOVE WITH LIGHT GRINDING. STANDARD HARDENED WASHERS ARE REQUIRED OVER ALL SLOTS. SEE ERECTION DRAWINGS FOR MARK NUMBERS AND QUANTITIES.

REV. DATE:06/23/11 | REV. NO. 01
BR15L1 — STRUT BRACING
GAGE STRUT IN ROOF

NOTE: ALL BOLTS TO BE 1/2" X 1 1/2" A325 BOLTS (49080) (U.N.O.)

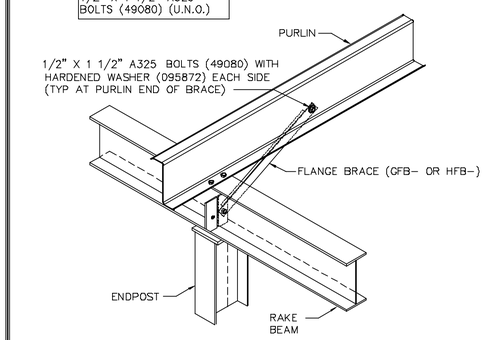

REV. DATE:06/24/11 | REV. NO. 01
BR25A3 — ENDPOST TOP BRACING
ENDPOST WITHIN 6" (152mm) OF PURLIN

NOTE: ALL BOLTS TO BE 1/2" X 1 1/2" A325 BOLTS (49080) (U.N.O.)

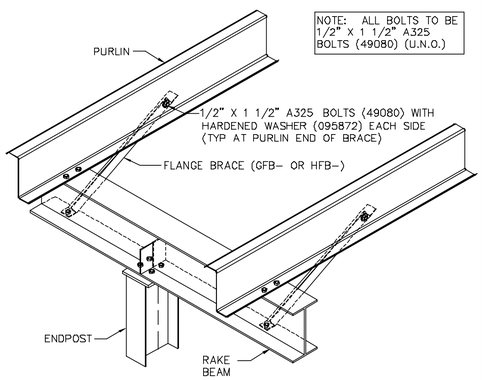

REV. DATE:11/16/15 | REV. NO. 03
BR25CA — ENDPOST TOP BETWEEN PURLINS
NO CAP CHANNEL – BRACED TO PURLINS ONLY

F = FEET G = GAGE
I = INCHES O = OPERATION
E = EIGHTHS C = FIN/COLOR

PANEL/COVERING
W 1 3 1 1 7 2 6 1 K T D
* F F I I E G G O C C C
LENGTH CODE

INSULATION
I B 1 3 0 1 0 3 6 0 3 0 W V
* * F F F I I I I I I E C C
LENGTH WIDTH THK CODE

SECONDARY (STANDARD)
0 8 Z 1 9 1 1 4 1 7 – – – – –
* * * F F I I E G G * * * * *
DEPTH | LENGTH SHAPE GAGE ADJUST.CODES

SECONDARY (SPECIAL)
0 0 1 0 8 Z 1 9 1 1 4 1 7 – – –
* * * * * * F F I I E G G * * *
COUNTER DEPTH& SHAPE LENGTH GAGE ADJUST.CODES

ROD BRACING
0 3 R S 2 5 1 0
I E * * F F I I
DIA LENGTH

RS = THREADS BOTH ENDS
RT = THREADS ONE END – CLEVIS ONE END
RU = CLEVIS BOTH ENDS
RP = THREAD BOTH ENDS – NO HILLSIDES

CX*** = COLUMN (PLATE)
CGX*** = COLUMN (GAGE)
WCX*** = COLUMN (HOTROLL)

RBX*** = RAFTER (PLATE)
BGX*** = RAFTER (GAGE)
WRX*** = RAFTER (HOTROLL)
TRX*** = TRUSS RAFTER

ICX*** = INTERIOR COLUMN
PCX*** = PIPE COLUMN
TCX*** = TUBE COLUMN

EPX*** = ENDPOST (PLATE)
EGX*** = ENDPOST (GAGE)

CBX*** = CANOPY (PLATE)
CBX*** = PIGGYBACK CANOPY

DCC*** = 8 1/2" GAGE POST
DCE*** = 10" GAGE POST

REV. DATE:08/29/12 | REV. NO. 01
EN50B1 — MARK NUMBER KEY
COMMON GENERATED MARK NUMBERS

BASIC ERECTION GUIDE REQUIRED FOR THIS PROJECT:

REFER TO:

VARCO PRUDEN BUILDINGS

BASIC ERECTION GUIDE

The Field Guide for correctly storing and erecting Varco Pruden Metal Building Systems

BACK COVER: 4001 BASIC ERECTION GUIDE

REV. DATE:01/30/14 | REV. NO. 00
ENV002 — BASIC ERECTION GUIDE – STRUCTURAL

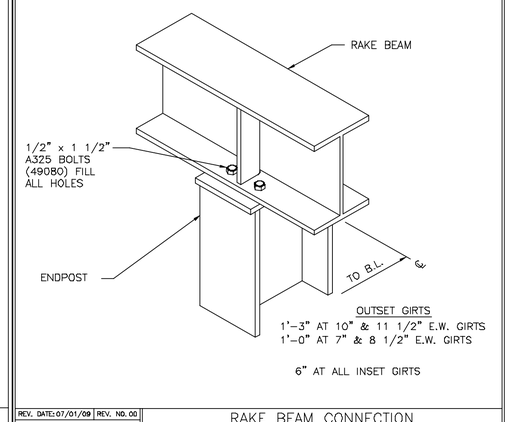

REV. DATE:07/01/09 | REV. NO. 00
PF10C2 — RAKE BEAM CONNECTION
TO ENDPOST

REVIEWED FOR CODE COMPLIANCE
01/27/2022

COLORADO LICENSED
EMMANUEL M. WRIGHT
0052792
PROFESSIONAL ENGINEER

09/10/2021

PERMIT SET- For Building Dept. Approval

1. USE 1/2 X 1 1/2 A325T BOLT (49080) AND NUT (47120) W/O WASHERS. SNUG TIGHTEN BOLTS FOR ALL SECONDARY CONNECTIONS, SECONDARY CLIP CONNECTIONS, AND FLANGE BRACE CONNECTIONS, UNLESS NOTED OTHERWISE.
2. SLOT REINFORCEMENT PLATES NEED NOT BE LOCATED ON THE SAME SIDE OF THE WEB AS THE HILLSIDE WASHER.

THE VP ENGINEER'S SEAL APPLIES ONLY TO THE WORK PRODUCT OF VP AND DESIGN AND PERFORMANCE REQUIREMENTS SPECIFIED BY VP. THE VP ENGINEER'S SEAL DOES NOT APPLY TO THE PERFORMANCE OR DESIGN OF ANY OTHER PRODUCT OR COMPONENT FURNISHED BY VP EXCEPT TO ANY DESIGN OR PERFORMANCE REQUIREMENTS SPECIFIED BY VP.

THIS DRAWING, INCLUDING THE INFORMATION HEREON, REMAINS THE PROPERTY OF VP BUILDINGS. IT IS PROVIDED SOLELY FOR ERECTING THE BUILDING DESCRIBED IN THE APPLICABLE PURCHASE ORDER AND MAY BE REPRODUCED ONLY FOR THAT PURPOSE. IT SHALL NOT BE MODIFIED, REPRODUCED OR USED FOR ANY OTHER PURPOSE WITHOUT PRIOR WRITTEN APPROVAL OF VP BUILDINGS.

THE GENERAL CONTRACTOR AND/OR ERECTOR IS SOLELY RESPONSIBLE FOR ACCURATE GOOD QUALITY WORKMANSHIP IN ERECTING THIS BUILDING IN ACCORDANCE WITH THIS DRAWING, DETAILS REFERENCED IN THIS DRAWING, ALL APPLICABLE VP BUILDINGS ERECTION GUIDES, AND INDUSTRY STANDARDS PERTAINING TO PROPER ERECTION, INCLUDING THE CORRECT USE OF TEMPORARY BRACING.

D

VP Buildings
3200 Players Club Circle Memphis TN 38125

REV	DATE	BY	DESCRIPTION

NTS

9/8/2021 SEDSheet 12:32:37

PRIMARY BRACING SED'S

BUILDER	Rule Steel
CUSTOMER	
LOCATION	Clark, Colorado
PROJECT	DC Riding Arena
BUILDERS PO#	
FILENAME:	DC Riding Arena Option 2

VP BUILDINGS
VARCO PRUDEN
A BlueScope Steel Company
VPC VERSION: 2021.2a

JOBNO	21-007748-01
DATE	09/08/2021
DRAWN/CHECK	SDA SDA
PAGE	21

a division of BlueScope Buildings North America, Inc.

Secondary Part Schedule

Mark	Part	Thick.	Depth	Lap	Detail
E1	00111CS2304016B0	0.0680	11 1/2"		RSV004, RSV003, RSV002, RSV001
E10	11E1911416DDB04	0.0680	11 1/2"		RS12PE
E16	00111ES1911416B04	0.0680	11 1/2"		RS12PH,RS12PA
E17	00311ES1911416B04	0.0680	11 1/2"		RS12PH,RS12PA
E2	11C1911416DDB0	0.0680	11 1/2"		RSV004, RSV003, RSV002, RSV001
E3	11C2411416DDB0	0.0680	11 1/2"		RSV004, RSV003, RSV002, RSV001
E6	11E1911411DDB04	0.1130	11 1/2"		RS12PA, RS12PE
E7	11E2411411DDB04	0.1130	11 1/2"		RS12PA
E9	00111ES2304011B04	0.1130	11 1/2"		RS12PF, RS12PE
P1	00111ZS2504016B0	0.0680	11 1/2"	1'-10 1/2"	RS01U1
P10	11Z271141355B0	0.0880	11 1/2"	3'-10 1/2"	RS01U1
P11	11Z271141655B0	0.0680	11 1/2"	3'-10 1/2"	RS01U1
P12	11Z271141555B0	0.0730	11 1/2"	3'-10 1/2"	RS01U1
P13	11Z321141355B0	0.0880	11 1/2"	3'-10 1/2"	RS01U1

Secondary Part Schedule

Mark	Part	Thick.	Depth	Lap	Detail
P14	11Z321141655B0	0.0680	11 1/2"	3'-10 1/2"	RS01U1
P2	11Z231141633B0	0.0680	11 1/2"	1'-10 1/2"	RS01U1
P21	00511ZS2604016B0	0.0680	11 1/2"	2'-10 1/2"	RS02T1, RS01U1
P3	11Z281141633B0	0.0680	11 1/2"	1'-10 1/2"	RS01U1
P38	00611ZS3011411B0	0.113	11 1/2"	3'-10 1/2"	RS02T1, RS01U1
P39	00711ZS3011416B0	0.0680	11 1/2"	3'-10 1/2"	RS02T1, RS01U1
P4	00211ZS2504016B0	0.0680	11 1/2"	1'-10 1/2"	RS01U1
P40	00811ZS2604016B0	0.0680	11 1/2"	2'-10 1/2"	RS02T1, RS01U1
P41	00911ZS2604013B0	0.0880	11 1/2"	2'-10 1/2"	RS02T1, RS01U1
P42	01011ZS3011415B0	0.0730	11 1/2"	3'-10 1/2"	RS02T1, RS01U1
P5	00311ZS3011411B0	0.113	11 1/2"	3'-10 1/2"	RS02T1, RS01U1
P6	00411ZS3011416B0	0.0680	11 1/2"	3'-10 1/2"	RS02T1, RS01U1

Secondary Bracing Schedule

Id	Qty	Mark No	Spacing
1	96	CPBRE020010	1'-9 13/16"
2	772	CPBB020108	2'-0"
3	1248	CPBB030508(Typ.)	3'-4"
4	214	PBA0206	2'-1 1/8"
5	118	PBA0201	1'-8 7/8"

See SED:
BR09PK, BR09RY, BR09RZ, BR09JG, BR09PH
BR09JR, BR09JH, BR09K5, BR09K2

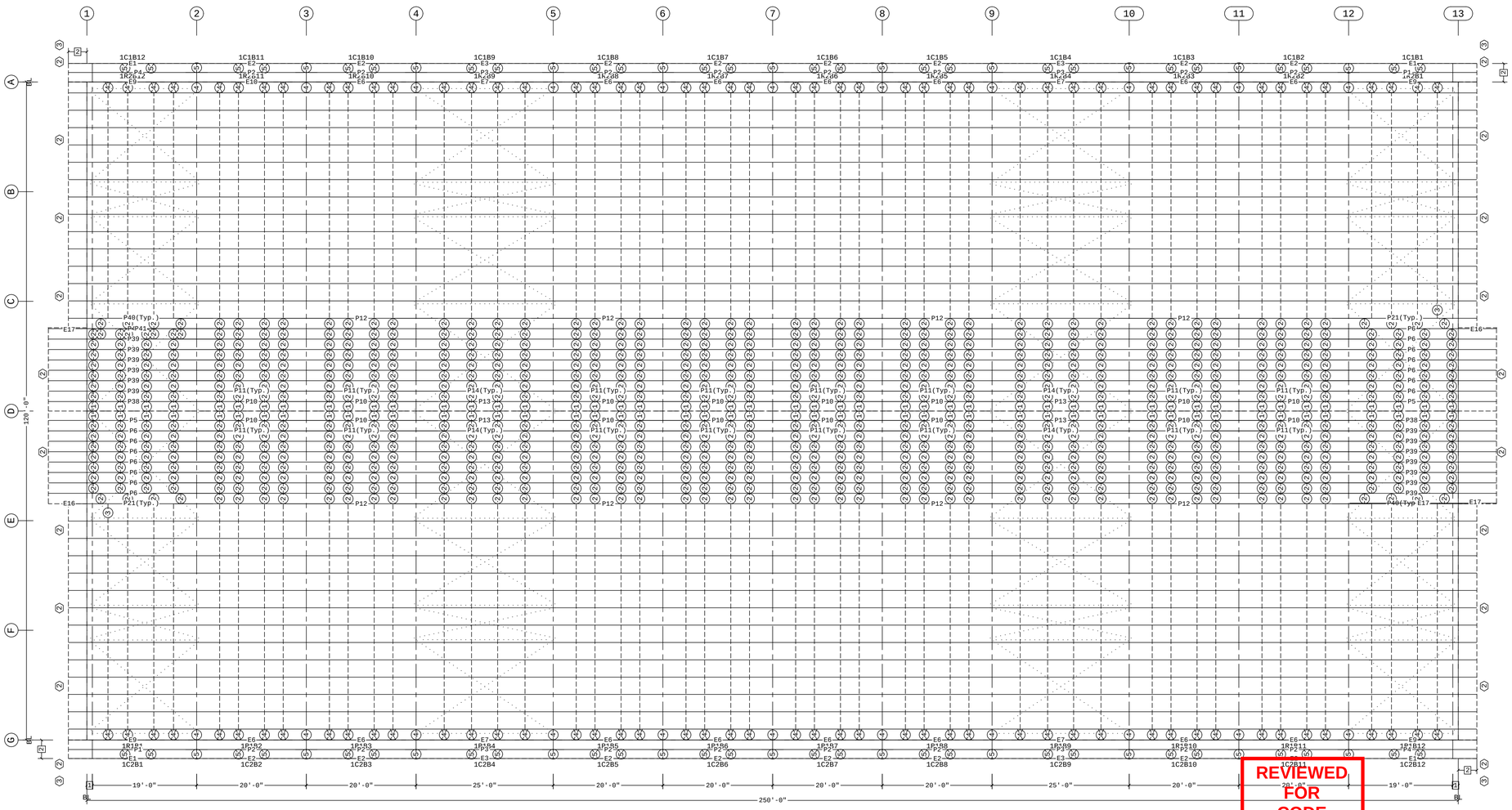

ROOF SECONDARY PLAN

REVIEWED FOR CODE COMPLIANCE
01/27/2022

COLORADO LICENSED
DANIEL M. HUBER
0052792
PROFESSIONAL ENGINEER

09/10/2021

2 3'-4 1/2"
1 1'-0"
Dimension Key

Part Mark Key
1 ESH3
2 RCHC15
3 RCHB15

Shape Name = Riding Arena, Shape = Riding Arena, Shape = Riding Arena

PERMIT SET- For Building Dept. Approval

1. UNLESS NOTED, USE 1/2 X 1 1/2 A325T BOLT (49080) AND NUT (47120) W/O WASHERS. SNUG TIGHTEN BOLTS FOR ALL SECONDARY CONNECTIONS.
2. FLANGE BRACES ARE AN INTEGRAL PART OF THE STABILITY OF THE STRUCTURAL SYSTEM AND MUST BE PROPERLY INSTALLED PRIOR TO ERECTION OF WALL AND ROOF SHEETS.
3. REMOVAL OR ALTERATION OF ANY COMPONENT IS PROHIBITED.

THE VP ENGINEER'S SEAL APPLIES ONLY TO THE WORK PRODUCT OF VP AND DESIGN AND PERFORMANCE REQUIREMENTS SPECIFIED BY VP. THE VP ENGINEER'S SEAL DOES NOT APPLY TO THE PERFORMANCE OR DESIGN OF ANY OTHER PRODUCT OR COMPONENT FURNISHED BY VP EXCEPT TO ANY DESIGN OR PERFORMANCE REQUIREMENTS SPECIFIED BY VP.

THIS DRAWING, INCLUDING THE INFORMATION HEREON, REMAINS THE PROPERTY OF VP BUILDINGS. IT IS PROVIDED SOLELY FOR ERECTING THE BUILDING DESCRIBED IN THE APPLICABLE PURCHASE ORDER AND MAY BE REPRODUCED ONLY FOR THAT PURPOSE. IT SHALL NOT BE MODIFIED, REPRODUCED OR USED FOR ANY OTHER PURPOSE WITHOUT PRIOR WRITTEN APPROVAL OF VP BUILDINGS.

THE GENERAL CONTRACTOR AND/OR ERECTOR IS SOLELY RESPONSIBLE FOR ACCURATE GOOD QUALITY WORKMANSHIP IN ERECTING THIS BUILDING IN ACCORDANCE WITH THIS DRAWING, DETAILS REFERENCED IN THIS DRAWING, ALL APPLICABLE VP BUILDINGS ERECTION GUIDES, AND INDUSTRY STANDARDS PERTAINING TO PROPER ERECTION, INCLUDING THE CORRECT USE OF TEMPORARY BRACING.

D

VP Buildings
3200 Players Club Circle Memphis TN 38125

REV	DATE	BY	DESCRIPTION

NTS

ROOF SECONDARY PLAN

BUILDER	Rule Steel
CUSTOMER	
LOCATION	Clark, Colorado
PROJECT	DC Riding Arena
BUILDERS PO#	

VP BUILDINGS
VARCO PRUDEN
A BlueScope Steel Company
VPC VERSION: 2021.2a

JOBNO	21-007748-01
DATE	09/08/2021
DRAWN/CHECK	SDA SDA
PAGE	22

MODIFIED IN AUTOCAD

FILENAME: E:\Divya selvaraj\CURRENT JOB\21-007748-01_permit\02 - OUTGOING\05 - PERMIT\CAD\21_DC Riding Arena Option 2_ROOF SECONDARY PLAN.dwg

SAVE DATE: 9/8/2021 SAVE TIME: 15:46:07 LAST SAVED BY: jkanagaraj

a division of BlueScope Buildings North America, Inc.

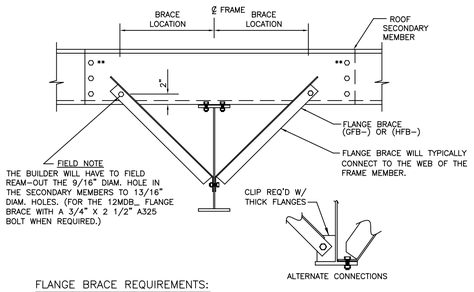

FLANGE BRACE REQUIREMENTS:

RULE#1– ALL FLANGE BRACES ON CROSS SECTIONS MUST BE INSTALLED.
RULE#2– SINGLE FLANGE BRACES ARE REQUIRED WHEN PART MARK ON CROSS SECTION IS NOT ACCOMPANIED BY (2).
RULE#3– FLANGE BRACES ARE REQUIRED BOTH SIDES OF THE FRAME WEB WHEN PART MARK IS ACCOMPANIED BY (2).
RULE#4– WHENEVER POSSIBLE, PLACE SINGLE BRACES TOWARD THE CENTER OF THE BUILDING.
RULE#5– WHENEVER POSSIBLE, PLACE ALL SINGLE BRACES ON THE SAME SIDE OF THE FRAME WEB.

** 10" & 11 1/2" PURLINS REQUIRE 3 BOLTS AT EACH END OF PURLIN LAP.

REV. DATE:05/08/18 | REV. NO. 02
BR06AE — TYPICAL FLANGE BRACE CONNECTIONS
CONT. PURLIN LAP SHOWN, CONT. GIRT & SIMPLE PURLIN

ERECTION NOTE:

WHEN A CHANNEL BRACE DOES NOT LINE UP WITH ANOTHER CHANNEL BRACE OR THE SLOTS IN THE PURLIN WEB FOR A DROP PIN CONNECTION BEND THE CHANNEL TABS TOWARD THE PURLIN WEB AND USE A SELF-DRILLER (55307) TO ATTACH.

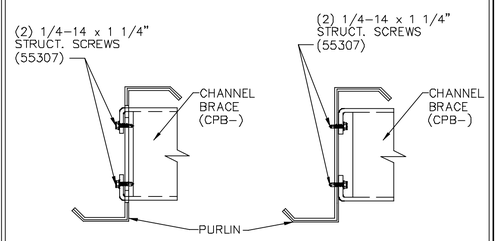

USE WHEN CHANNEL BRACE DOES LINE UP WITH THE SLOTS IN THE PURLIN WEB.

USE WHEN CHANNEL BRACE DOES NOT LINE UP WITH THE SLOTS IN THE PURLIN WEB.

REV. DATE:04/01/11 | REV. NO. 01
BR09JG — CHANNEL BRACE ENDING AT PURLIN WEB
SELF-DRILLER WITH BENT TABS

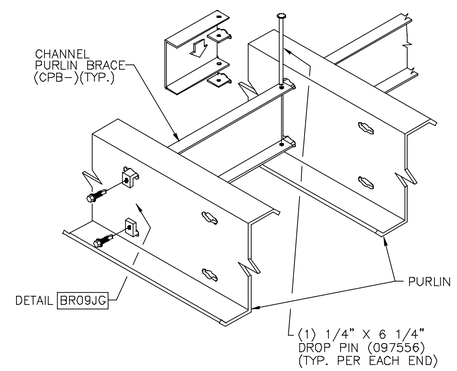

REV. DATE:07/01/09 | REV. NO. 00
BR09JH — SINGLE CHANNEL PURLIN BRACE
ENDING AT PURLIN WEB LOCATION

ERECTION NOTE:

CHANNEL BRACES THAT END AT A PURLIN WEB, BUT DO NOT HAVE TABS TO BEND AND SECURE. INSERT CLIP (544015) THROUGH WEB SLOTS AND USE A DROP PIN TO ATTACH TO CHANNEL BRACE.

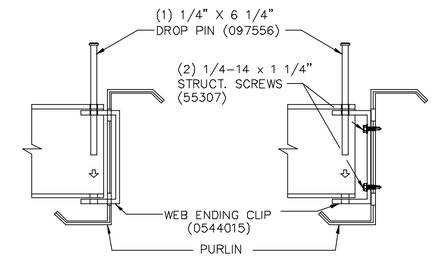

USE WHEN CHANNEL BRACE DOES LINE UP WITH THE SLOTS IN THE PURLIN WEB.

USE WHEN CHANNEL BRACE DOES NOT LINE UP WITH THE SLOTS IN THE PURLIN WEB.

REV. DATE:04/01/11 | REV. NO. 01
BR09JR — CHANNEL BRACE ENDING AT PURLIN WEB
WEB ENDING CLIP WITH DROP PIN

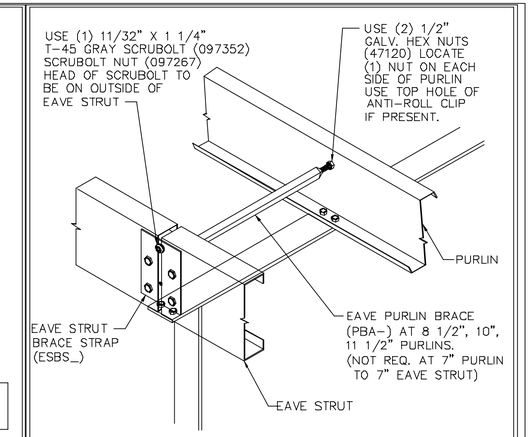

REV. DATE:07/20/18 | REV. NO. 05
BR09K2 — EAVE BRACE STRAP AND EAVE PURLIN BRACE
LOCATED AT EAVE – CENTERLINE OF FRAME

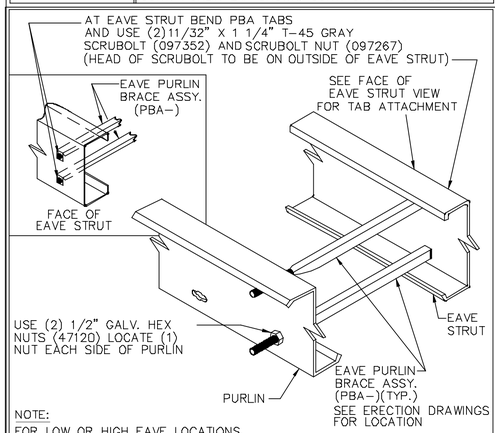

NOTE:
FOR LOW OR HIGH EAVE LOCATIONS.

REV. DATE:11/26/12 | REV. NO. 04
BR09K5 — EAVE STRUT BRACE

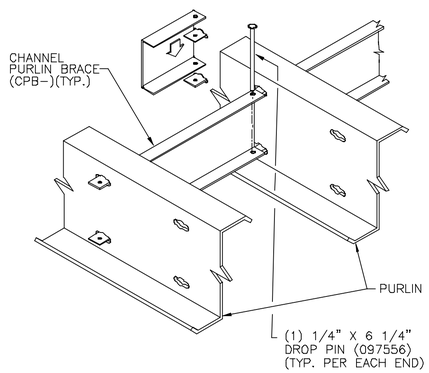

REV. DATE:07/01/09 | REV. NO. 00
BR09PH — SINGLE CHANNEL PURLIN BRACE
INTERMEDIATE LOCATION

NOTE:
1. SEE CHART FOR RIDGE BRACE ASSEMBLY SELECTION.
2. NEST CHANNELS TO ACHIEVE 5" BETWEEN HOLES AND USE DROP PINS TO SECURE.

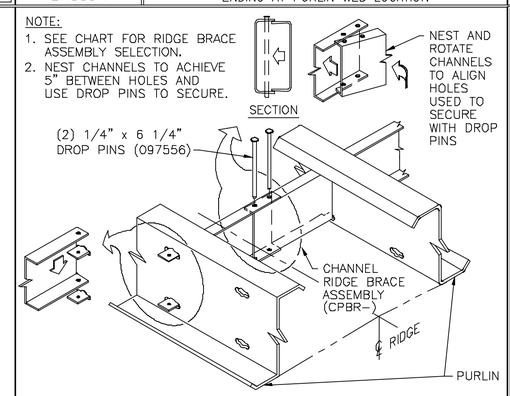

REV. DATE:07/01/09 | REV. NO. 00
BR09PK — CHANNEL RIDGE BRACE ASSEMBLY
SINGLE BRACE AT SYMMETRICAL RIDGE

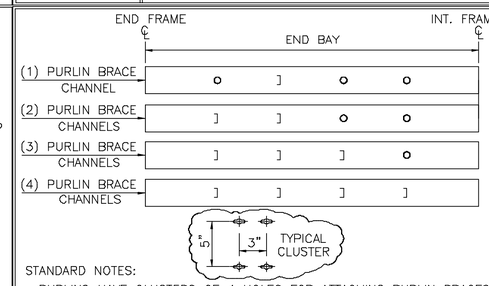

STANDARD NOTES:
– PURLINS HAVE CLUSTERS OF 4 HOLES FOR ATTACHING PURLIN BRACES. THESE CLUSTERS ARE REPRESENTED BY ONE OF THE SYMBOLS BELOW:
O – DO NOT INSTALL PURLIN BRACES AT THIS CLUSTER LOCATION.
] – INSTALL PURLIN BRACES AT THIS CLUSTER LOCATION. SEE SECONDARY ROOF DRAWING FOR BRACE REQUIREMENTS.
– INSTALL PURLIN BRACES AT THE RIDGE AND WORK TOWARD THE EAVE.
– CHANNEL BRACE MAY BE LOCATED IN EITHER SET OF SLOTS IN CLUSTER PROVIDED THEY ARE ALIGNED FROM EAVE TO EAVE IN A GIVEN BAY.

REV. DATE:07/01/09 | REV. NO. 00
BR09RY — PURLIN BRACE CLUSTER LOCATION
END BAY CHANNEL LOCATION

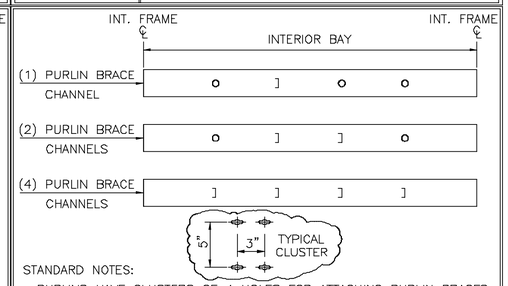

STANDARD NOTES:
– PURLINS HAVE CLUSTERS OF 4 HOLES FOR ATTACHING PURLIN BRACES. THESE CLUSTERS ARE REPRESENTED BY ONE OF THE SYMBOLS BELOW:
O – DO NOT INSTALL PURLIN BRACES AT THIS CLUSTER LOCATION.
] – INSTALL PURLIN BRACES AT THIS CLUSTER LOCATION. SEE SECONDARY ROOF DRAWING FOR BRACE REQUIREMENTS.
– INSTALL PURLIN BRACES AT THE RIDGE AND WORK TOWARD THE EAVE.
– CHANNEL BRACE MAY BE LOCATED IN EITHER SET OF SLOTS IN CLUSTER PROVIDED THEY ARE ALIGNED FROM EAVE TO EAVE IN A GIVEN BAY.

REV. DATE:07/01/09 | REV. NO. 00
BR09RZ — PURLIN BRACE CLUSTER LOCATION
INTERIOR BAY CHANNEL LOCATION

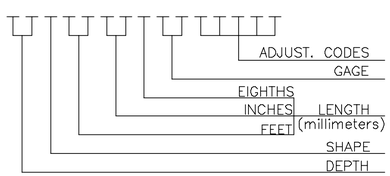

DEPTH	SHAPE	GAGE
07 = 7"	Z = ZEE	11 = 0.113
08 = 8 1/2"	C = CEE	12 = 0.098
10 = 10"	E = LOW EAVE STRUT	13 = 0.088
11 = 11 1/2"	H = HIGH EAVE STRUT	14 = 0.079
		15 = 0.073
		16 = 0.068
		17 = 0.060

REV. DATE:07/01/09 | REV. NO. 00
EN51B1 — SECONDARY PART MARK NUMBER
COMMON GENERATED MARK NUMBERS

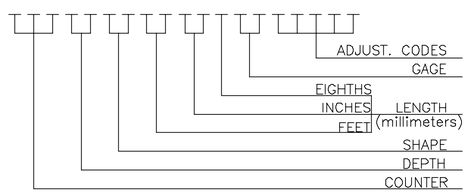

DEPTH	SHAPE	GAGE
07 = 7"	ZS = ZEE	11 = 0.113
08 = 8 1/2"	CS = CEE	12 = 0.098
10 = 10"	ES = LOW EAVE STRUT	13 = 0.088
11 = 11 1/2"	HS = HIGH EAVE STRUT	14 = 0.079
	BB = BACK TO BACK CEE	15 = 0.073
	FB = FACE TO BACK CEE	16 = 0.068
	FF = FACE TO FACE CEE	17 = 0.060

REV. DATE:07/01/09 | REV. NO. 00
EN51B2 — SPECIAL SECONDARY PART MARK KEY
COMMON GENERATED MARK NUMBERS

ERECTION DRAWING PART MARK

C
P
R
1 W 1 B 3

BAY NUMBER
CANOPY (C)/PARTITION(P)/ ROOF(R)/WALL(W) NUMBER
BUILDING SHAPE

THE BAY/BUNDLE CODE IDENTIFIES THE BUILDING CANOPY/PARTITION/ ROOF/WALL PLANE AND BAY

REV. DATE:01/31/13 | REV. NO. 01
EN51B3 — SECONDARY BUNDLE LOCATION KEY
ALL SECONDARY DEPTHS

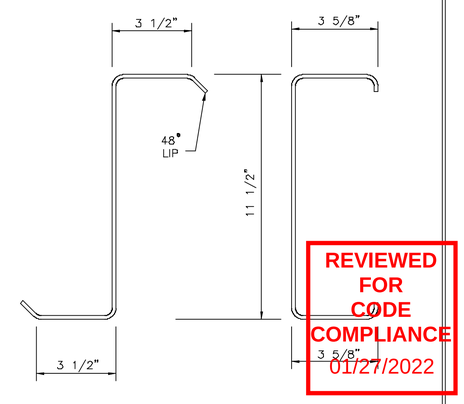

REVIEWED FOR CODE COMPLIANCE
01/27/2022

REV. DATE:07/01/09 | REV. NO. 00
EN53H1 — PURLIN / GIRT
11 1/2" 292mm

COLORADO LICENSED
MANUEL H. WUBBEN
0052792
PROFESSIONAL ENGINEER

09/10/2021

PERMIT SET- For Building Dept. Approval

1. UNLESS NOTED, USE 1/2 X 1 1/2 A325T BOLT (49080) AND NUT (47120) W/O WASHERS. SNUG TIGHTEN BOLTS FOR ALL SECONDARY CONNECTIONS.
2. FLANGE BRACES ARE AN INTEGRAL PART OF THE STABILITY OF THE STRUCTURAL SYSTEM AND MUST BE PROPERLY INSTALLED PRIOR TO ERECTION OF WALL AND ROOF SHEETS.
3. REMOVAL OR ALTERATION OF ANY COMPONENT IS PROHIBITED.

THE VP ENGINEER'S SEAL APPLIES ONLY TO THE WORK PRODUCT OF VP AND DESIGN AND PERFORMANCE REQUIREMENTS SPECIFIED BY VP. THE VP ENGINEER'S SEAL DOES NOT APPLY TO THE PERFORMANCE OR DESIGN OF ANY OTHER PRODUCT OR COMPONENT FURNISHED BY VP EXCEPT TO ANY DESIGN OR PERFORMANCE REQUIREMENTS SPECIFIED BY VP.

THIS DRAWING, INCLUDING THE INFORMATION HEREON, REMAINS THE PROPERTY OF VP BUILDINGS. IT IS PROVIDED SOLELY FOR ERECTING THE BUILDING DESCRIBED IN THE APPLICABLE PURCHASE ORDER AND MAY BE REPRODUCED ONLY FOR THAT PURPOSE. IT SHALL NOT BE MODIFIED, REPRODUCED OR USED FOR ANY OTHER PURPOSE WITHOUT PRIOR WRITTEN APPROVAL OF VP BUILDINGS.

THE GENERAL CONTRACTOR AND/OR ERECTOR IS SOLELY RESPONSIBLE FOR ACCURATE GOOD QUALITY WORKMANSHIP IN ERECTING THIS BUILDING IN ACCORDANCE WITH THIS DRAWING, DETAILS REFERENCED IN THIS DRAWING, ALL APPLICABLE VP BUILDINGS ERECTION GUIDES, AND INDUSTRY STANDARDS PERTAINING TO PROPER ERECTION, INCLUDING THE CORRECT USE OF TEMPORARY BRACING.

D

VP Buildings
3200 Players Club Circle Memphis TN 38125

REV	DATE	BY	DESCRIPTION

NTS

9/8/2021 SEDSheet 12:32:40

ROOF SECONDARY SED'S

BUILDER	Rule Steel
CUSTOMER	
LOCATION	Clark, Colorado
PROJECT	DC Riding Arena
BUILDERS PO#	
FILENAME:	DC Riding Arena Option 2

VP BUILDINGS
VARCO PRUDEN
A BlueScope Steel Company
VPC VERSION: 2021.2a

JOBNO	21-007748-01
DATE	09/08/2021
DRAWN/CHECK	SDA SDA
PAGE	23

a division of BlueScope Buildings North America, Inc.

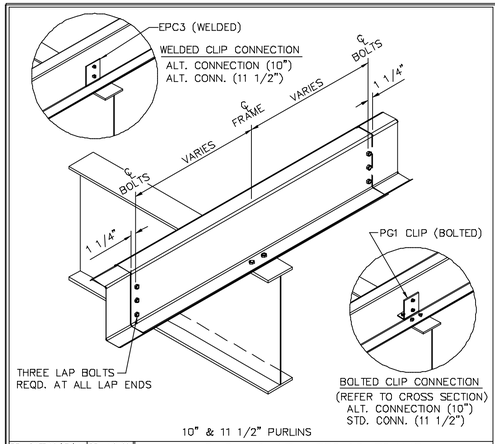

REV. DATE:06/17/14	REV. NO. 02	PURLINS AT INTERIOR FRAME CONTINUOUS PURLINS
RS01U1		

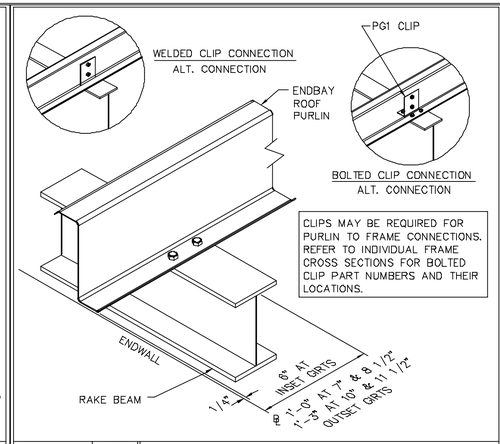

REV. DATE:06/17/15	REV. NO. 02	PURLIN CONNECTION TO END FRAME CONTINUOUS PURLINS
RS02T1		

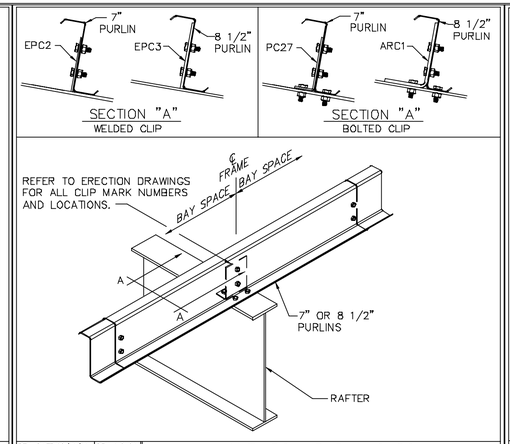

REV. DATE:08/11/14	REV. NO. 04	ANTI-ROLL PURLIN CLIPS WHEN REQUIRED BY DESIGN
RS03J1		

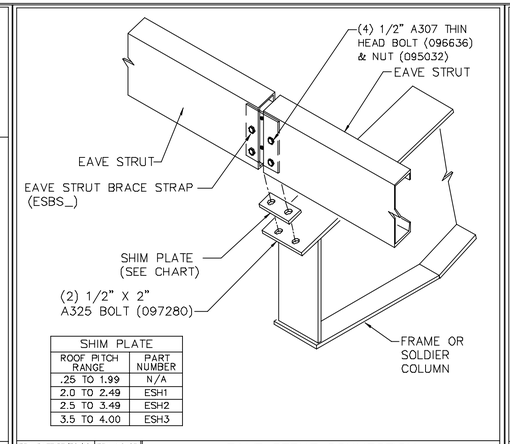

SHIM PLATE	
ROOF PITCH RANGE	PART NUMBER
.25 TO 1.99	N/A
2.0 TO 2.49	ESH1
2.5 TO 3.49	ESH2
3.5 TO 4.00	ESH3

REV. DATE:07/20/16	REV. NO. 03	EAVE STRUT CONNECTION AT INTERIOR FRAME
RS12PA		

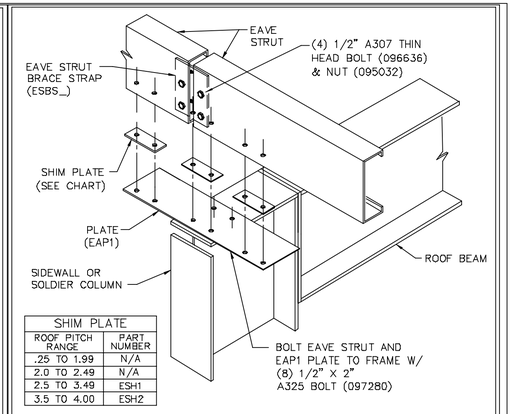

SHIM PLATE	
ROOF PITCH RANGE	PART NUMBER
.25 TO 1.99	N/A
2.0 TO 2.49	N/A
2.5 TO 3.49	ESH1
3.5 TO 4.00	ESH2

LOW EAVE STRUT SHOWN – HIGH EAVE STRUT USES SIMILAR PARTS.

REV. DATE:07/20/16	REV. NO. 05	EAVE STRUT W/ ATTACHMENT PLATE INTERIOR FRAME
RS12PE		

NOTE:
EAP2 PLATE ONLY REQ'D. WHEN CALLED OUT ON FRAME CROSS SECTION

SHIM PLATE	
ROOF PITCH RANGE	PART NUMBER
.25 TO 1.99	N/A
2.0 TO 2.49	N/A
2.5 TO 3.49	ESH1
3.5 TO 4.00	ESH2

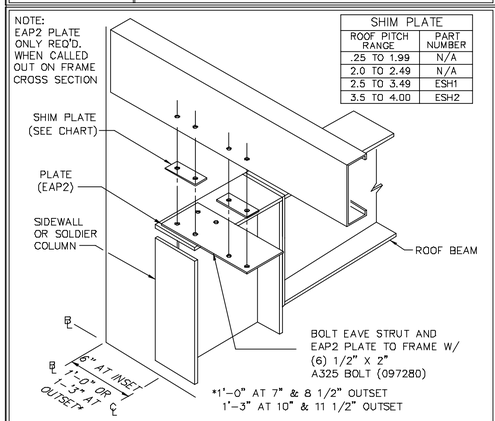

LOW EAVE STRUT SHOWN – HIGH EAVE STRUT USES SIMILAR PARTS.

REV. DATE:03/26/15	REV. NO. 02	EAVE STRUT W/ ATTACHMENT PLATE END FRAME
RS12PF		

NOTES:
ALL CONNECTIONS 1/2" X 1 1/2" A325 BOLTS (49080) TYPICAL U.N.
** EAVE STRUCTURAL CONN. 1/2" X 1 1/4" THIN HD A307 BOLT.
* TRIM ANGLE ONLY REQUIRED WHEN CALLED FOR ON THE ERECTION DRAWINGS.

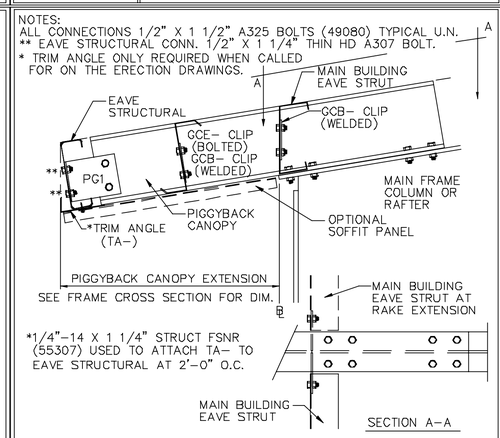

REV. DATE:11/20/17	REV. NO. 01	PIGGYBACK CANOPY ALL PURLIN DEPTHS – LOW EAVE
RSV001		

* TRIM ANGLE ONLY REQUIRED WHEN CALLED FOR ON THE ERECTION DRAWINGS.

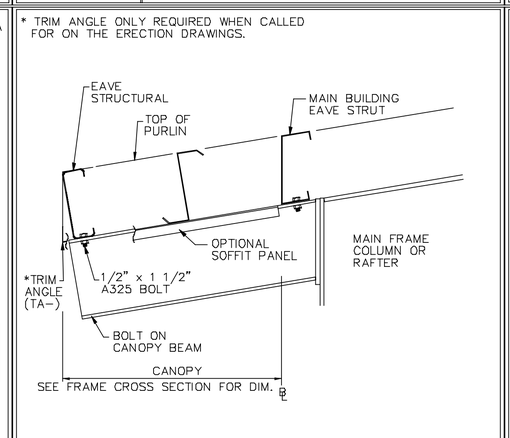

REV. DATE:08/19/14	REV. NO. 00	BOLT ON CANOPY ALL PURLIN DEPTHS – LOW EAVE
RSV002		

NOTES:
ALL CONNECTIONS 1/2" X 1 1/2" A325 BOLTS (49080) TYPICAL U.N.
**EAVE STRUCT. CONN. 1/2" X 1 1/4" A307 THIN HD BOLTS (096336).

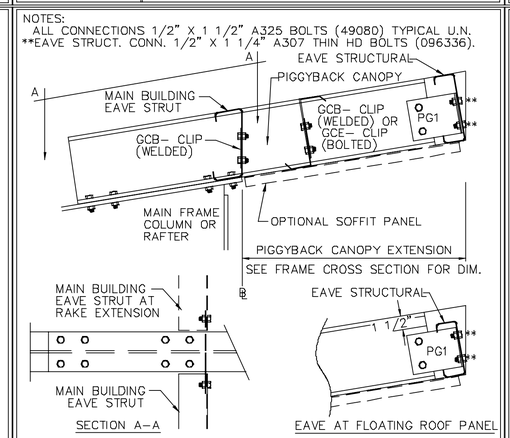

REV. DATE:11/20/17	REV. NO. 01	PIGGYBACK CANOPY ALL PURLIN DEPTHS – HIGH EAVE
RSV003		

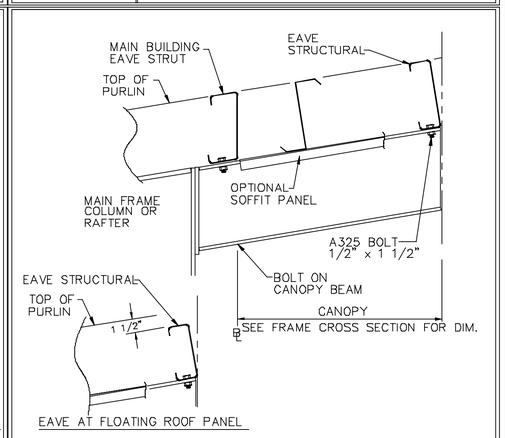

REV. DATE:08/19/14	REV. NO. 00	BOLT ON CANOPY ALL PURLIN DEPTHS – HIGH EAVE
RSV004		

NOTE: ALL BOLTS TO BE 1/2" X 1 1/2" A325 BOLTS (49080) (U.N.O.)

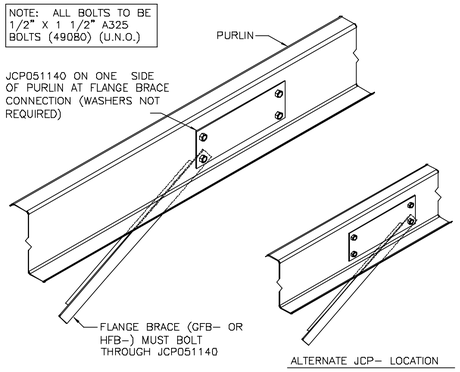

REV. DATE:07/01/09	REV. NO. 00	ENDPOST TOP BRACING PURLIN REINFORCEMENT
BR25DH		

REVIEWED FOR CODE COMPLIANCE
01/27/2022

COLORADO LICENSED
MANUEL M. WEBER
0052792
PROFESSIONAL ENGINEER

09/10/2021

PERMIT SET- For Building Dept. Approval

1. UNLESS NOTED, USE 1/2 X 1 1/2 A325T BOLT (49080) AND NUT (47120) W/O WASHERS. SNUG TIGHTEN BOLTS FOR ALL SECONDARY CONNECTIONS.
2. FLANGE BRACES ARE AN INTEGRAL PART OF THE STABILITY OF THE STRUCTURAL SYSTEM AND MUST BE PROPERLY INSTALLED PRIOR TO ERECTION OF WALL AND ROOF SHEETS.
3. REMOVAL OR ALTERATION OF ANY COMPONENT IS PROHIBITED.

THE VP ENGINEER'S SEAL APPLIES ONLY TO THE WORK PRODUCT OF VP AND DESIGN AND PERFORMANCE REQUIREMENTS SPECIFIED BY VP. THE VP ENGINEER'S SEAL DOES NOT APPLY TO THE PERFORMANCE OR DESIGN OF ANY OTHER PRODUCT OR COMPONENT FURNISHED BY VP EXCEPT TO ANY DESIGN OR PERFORMANCE REQUIREMENTS SPECIFIED BY VP.

THIS DRAWING, INCLUDING THE INFORMATION HEREON, REMAINS THE PROPERTY OF VP BUILDINGS. IT IS PROVIDED SOLELY FOR ERECTING THE BUILDING DESCRIBED IN THE APPLICABLE PURCHASE ORDER AND MAY BE REPRODUCED ONLY FOR THAT PURPOSE. IT SHALL NOT BE MODIFIED, REPRODUCED OR USED FOR ANY OTHER PURPOSE WITHOUT PRIOR WRITTEN APPROVAL OF VP BUILDINGS.

THE GENERAL CONTRACTOR AND/OR ERECTOR IS SOLELY RESPONSIBLE FOR ACCURATE GOOD QUALITY WORKMANSHIP IN ERECTING THIS BUILDING IN ACCORDANCE WITH THIS DRAWING, DETAILS REFERENCED IN THIS DRAWING, ALL APPLICABLE VP BUILDINGS ERECTION GUIDES, AND INDUSTRY STANDARDS PERTAINING TO PROPER ERECTION, INCLUDING THE CORRECT USE OF TEMPORARY BRACING.

D

VP Buildings
3200 Players Club Circle Memphis TN 38125

REV	DATE	BY	DESCRIPTION

NTS

9/8/2021 SEDSheet 12:32:42

ROOF SECONDARY SED'S

BUILDER	Rule Steel
CUSTOMER	
LOCATION	Clark, Colorado
PROJECT	DC Riding Arena
BUILDERS PO#	
FILENAME:	DC Riding Arena Option 2

VP BUILDINGS
VARCO PRUDEN
A BlueScope Steel Company
VPC VERSION: 2021.2b

JOBNO	21-007748-01
DATE	09/08/2021
DRAWN/CHECK	SDA SDA
PAGE	24

a division of BlueScope Buildings North America, Inc.

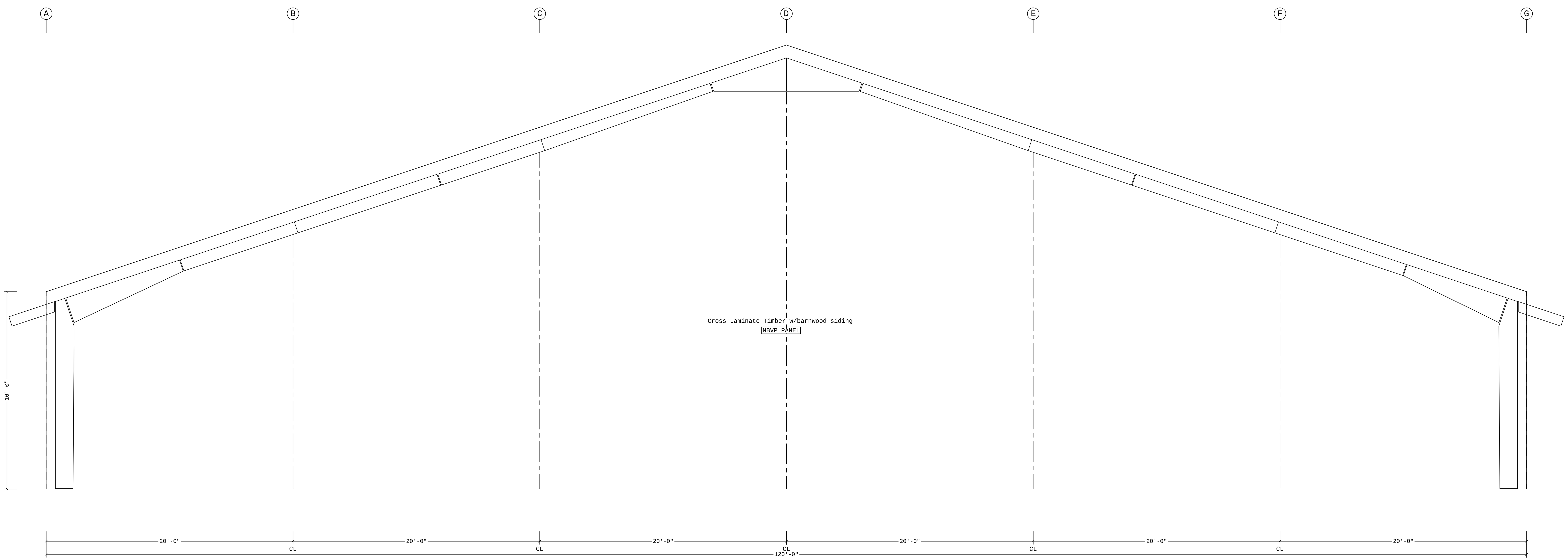

SECONDARY ELEVATION AT 1

REVIEWED FOR CODE COMPLIANCE 01/27/2022

COLORADO LICENSED PROFESSIONAL ENGINEER MANUEL M. WIEBE 0052792

09/10/2021

Shape Name = Riding Arena, Wall = 1

PERMIT SET- For Building Dept. Approval

1. UNLESS NOTED, USE 1/2 X 1 1/2 A325T BOLT (49080) AND NUT (47120) W/O WASHERS. SNUG TIGHTEN BOLTS FOR ALL SECONDARY CONNECTIONS.
2. FLANGE BRACES ARE AN INTEGRAL PART OF THE STRUCTURAL SYSTEM AND MUST BE PROPERLY INSTALLED PRIOR TO ERECTION OF WALL AND ROOF SHEETS.
3. REMOVAL OR ALTERATION OF ANY COMPONENT IS PROHIBITED.

THE VP ENGINEER'S SEAL APPLIES ONLY TO THE WORK PRODUCT OF VP AND DESIGN AND PERFORMANCE REQUIREMENTS SPECIFIED BY VP. THE VP ENGINEER'S SEAL DOES NOT APPLY TO THE PERFORMANCE OR DESIGN OF ANY OTHER PRODUCT OR COMPONENT FURNISHED BY VP EXCEPT TO ANY DESIGN OR PERFORMANCE REQUIREMENTS SPECIFIED BY VP.

THIS DRAWING, INCLUDING THE INFORMATION HEREON, REMAINS THE PROPERTY OF VP BUILDINGS. IT IS PROVIDED SOLELY FOR ERECTING THE BUILDING DESCRIBED IN THE APPLICABLE PURCHASE ORDER AND MAY BE REPRODUCED ONLY FOR THAT PURPOSE. IT SHALL NOT BE MODIFIED, REPRODUCED OR USED FOR ANY OTHER PURPOSE WITHOUT PRIOR WRITTEN APPROVAL OF VP BUILDINGS.

THE GENERAL CONTRACTOR AND/OR ERECTOR IS SOLELY RESPONSIBLE FOR ACCURATE GOOD QUALITY WORKMANSHIP IN ERECTING THIS BUILDING IN ACCORDANCE WITH THIS DRAWING, DETAILS REFERENCED IN THIS DRAWING, ALL APPLICABLE VP BUILDINGS ERECTION GUIDES, AND INDUSTRY STANDARDS PERTAINING TO PROPER ERECTION, INCLUDING THE CORRECT USE OF TEMPORARY BRACING.

D

VP Buildings
3200 Players Club Circle Memphis TN 38125

SECONDARY ELEVATION AT 1

REV	DATE	BY	DESCRIPTION

NTS

BUILDER	Rule Steel
CUSTOMER	
LOCATION	Clark, Colorado
PROJECT	DC Riding Arena
BUILDERS PO#	

VP BUILDINGS
VARCO PRUDEN
A BlueScope Steel Company
VPC VERSION: **2021.2a**

JOBNO	21-007748-01
DATE	09/08/2021
DRAWN/CHECK	SDA SDA
PAGE	25

MODIFIED IN AUTOCAD

FILENAME: E:\Divya selvaraj\CURRENT JOB\21-007748-01_permit\02 - OUTGOING\05 - PERMIT\CAD\24_DC Riding Arena Option 2_SECONDARY ELEVATION AT 1.dwg

SAVE DATE: 9/8/2021 SAVE TIME: 15:46:11 LAST SAVED BY: jkanagaraj

a division of BlueScope Buildings North America, Inc.

Bracing Part Schedule

Part	Qty	Length	Detail
10RU2207	4	22'-7"	BR02K1
10RU2708	4	27'-8"	BR02K1

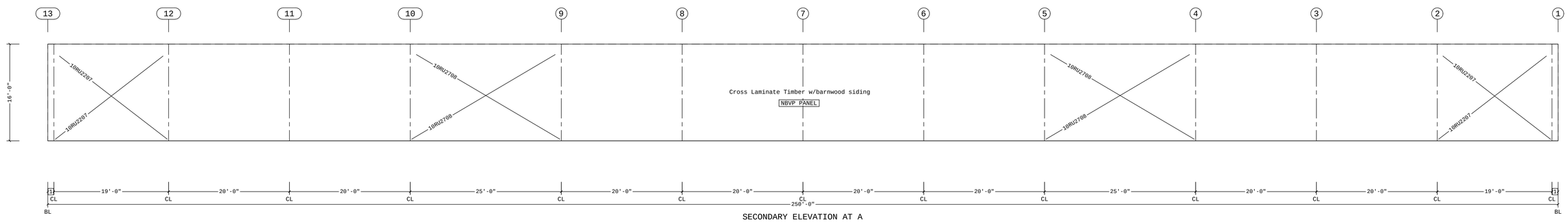

SECONDARY ELEVATION AT A

REVIEWED FOR CODE COMPLIANCE
01/27/2022

COLORADO LICENSED
MANUEL M. WIBE JR.
0052792
PROFESSIONAL ENGINEER

09/10/2021

1 1'-0"

☐ Dimension Key

Shape Name = Riding Arena, Wall = 2

PERMIT SET- For Building Dept. Approval

1. UNLESS NOTED, USE 1/2 X 1 1/2 A325T BOLT (49080) AND NUT (47120) W/O WASHERS. SNUG TIGHTEN BOLTS FOR ALL SECONDARY CONNECTIONS.
2. FLANGE BRACES ARE AN INTEGRAL PART OF THE STABILITY OF THE STRUCTURAL SYSTEM AND MUST BE PROPERLY INSTALLED PRIOR TO ERECTION OF WALL AND ROOF SHEETS.
3. REMOVAL OR ALTERATION OF ANY COMPONENT IS PROHIBITED.

THE VP ENGINEER'S SEAL APPLIES ONLY TO THE WORK PRODUCT OF VP AND DESIGN AND PERFORMANCE REQUIREMENTS SPECIFIED BY VP. THE VP ENGINEER'S SEAL DOES NOT APPLY TO THE PERFORMANCE OR DESIGN OF ANY OTHER PRODUCT OR COMPONENT FURNISHED BY VP EXCEPT TO ANY DESIGN OR PERFORMANCE REQUIREMENTS SPECIFIED BY VP.

THIS DRAWING, INCLUDING THE INFORMATION HEREON, REMAINS THE PROPERTY OF VP BUILDINGS. IT IS PROVIDED SOLELY FOR ERECTING THE BUILDING DESCRIBED IN THE APPLICABLE PURCHASE ORDER AND MAY BE REPRODUCED ONLY FOR THAT PURPOSE. IT SHALL NOT BE MODIFIED, REPRODUCED OR USED FOR ANY OTHER PURPOSE WITHOUT PRIOR WRITTEN APPROVAL OF VP BUILDINGS.

THE GENERAL CONTRACTOR AND/OR ERECTOR IS SOLELY RESPONSIBLE FOR ACCURATE GOOD QUALITY WORKMANSHIP IN ERECTING THIS BUILDING IN ACCORDANCE WITH THIS DRAWING, DETAILS REFERENCED IN THIS DRAWING, ALL APPLICABLE VP BUILDINGS ERECTION GUIDES, AND INDUSTRY STANDARDS PERTAINING TO PROPER ERECTION, INCLUDING THE CORRECT USE OF TEMPORARY BRACING.

D

VP Buildings
3200 Players Club Circle Memphis TN 38125

REV	DATE	BY	DESCRIPTION

NTS

SECONDARY ELEVATION AT A

BUILDER	Rule Steel
CUSTOMER	
LOCATION	Clark, Colorado
PROJECT	DC Riding Arena
BUILDERS PO#	

VP BUILDINGS
VARCO PRUDEN
A BlueScope Steel Company
VPC VERSION: **2021.2a**

JOBNO	21-007748-01
DATE	09/08/2021
DRAWN/CHECK	SDA SDA
PAGE	26

MODIFIED IN AUTOCAD

FILENAME: E:\Divya selvaraj\CURRENT JOB\21-007748-01_permit\02 - OUTGOING\05 - PERMIT\CAD\25_DC Riding Arena Option 2_SECONDARY ELEVATION AT A.dwg **SAVE DATE:** 9/8/2021 **SAVE TIME:** 15:46:15 **LAST SAVED BY:** jkanagaraj

a division of BlueScope Buildings North America, Inc.

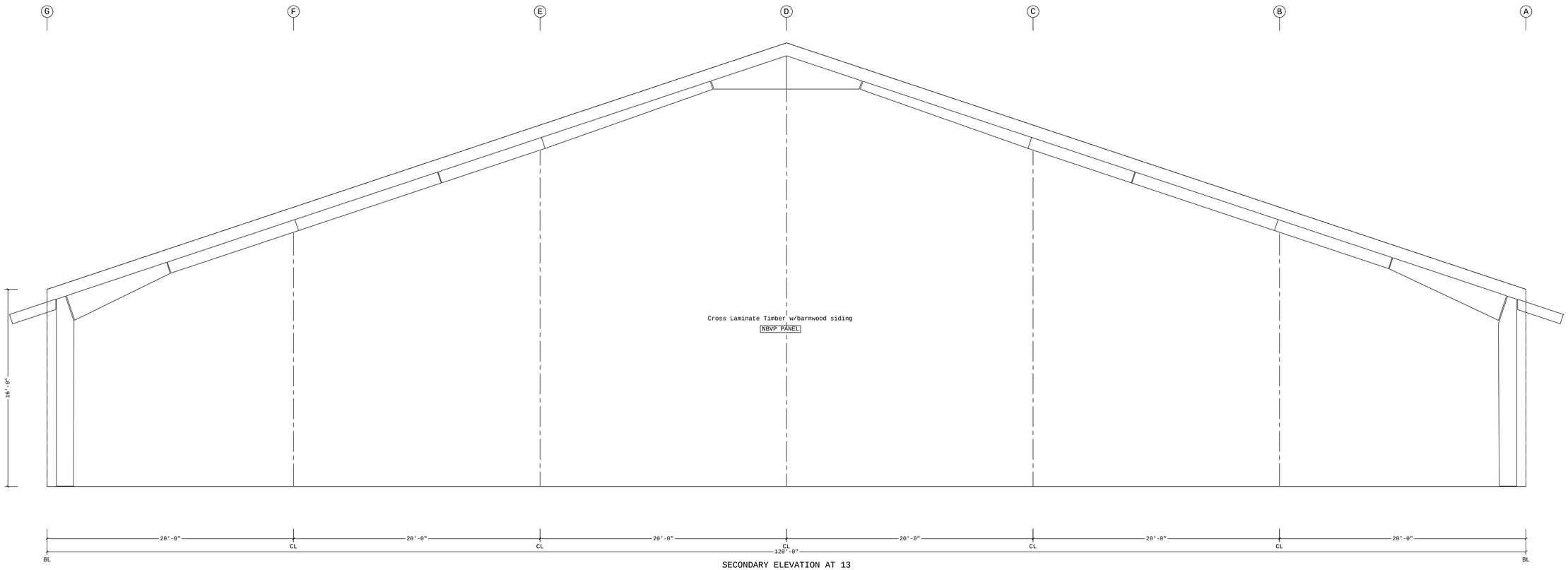

SECONDARY ELEVATION AT 13

REVIEWED FOR CODE COMPLIANCE
01/27/2022

COLORADO LICENSED
MANUEL M. WUBEH
0052792
PROFESSIONAL ENGINEER

09/10/2021

Shape Name = Riding Arena, Wall = 3

PERMIT SET- For Building Dept. Approval

1. UNLESS NOTED, USE 1/2 X 1 1/2 A325T BOLT (49080) AND NUT (47120) W/O WASHERS. SNUG TIGHTEN BOLTS FOR ALL SECONDARY CONNECTIONS.
2. FLANGE BRACES ARE AN INTEGRAL PART OF THE STABILITY OF THE STRUCTURAL SYSTEM AND MUST BE PROPERLY INSTALLED PRIOR TO ERECTION OF WALL AND ROOF SHEETS.
3. REMOVAL OR ALTERATION OF ANY COMPONENT IS PROHIBITED.

THE VP ENGINEER'S SEAL APPLIES ONLY TO THE WORK PRODUCT OF VP AND DESIGN AND PERFORMANCE REQUIREMENTS SPECIFIED BY VP. THE VP ENGINEER'S SEAL DOES NOT APPLY TO THE PERFORMANCE OR DESIGN OF ANY OTHER PRODUCT OR COMPONENT FURNISHED BY VP EXCEPT TO ANY DESIGN OR PERFORMANCE REQUIREMENTS SPECIFIED BY VP.

THIS DRAWING, INCLUDING THE INFORMATION HEREON, REMAINS THE PROPERTY OF VP BUILDINGS. IT IS PROVIDED SOLELY FOR ERECTING THE BUILDING DESCRIBED IN THE APPLICABLE PURCHASE ORDER AND MAY BE REPRODUCED ONLY FOR THAT PURPOSE. IT SHALL NOT BE MODIFIED, REPRODUCED OR USED FOR ANY OTHER PURPOSE WITHOUT PRIOR WRITTEN APPROVAL OF VP BUILDINGS.

THE GENERAL CONTRACTOR AND/OR ERECTOR IS SOLELY RESPONSIBLE FOR ACCURATE GOOD QUALITY WORKMANSHIP IN ERECTING THIS BUILDING IN ACCORDANCE WITH THIS DRAWING, DETAILS REFERENCED IN THIS DRAWING, ALL APPLICABLE VP BUILDINGS ERECTION GUIDES, AND INDUSTRY STANDARDS PERTAINING TO PROPER ERECTION, INCLUDING THE CORRECT USE OF TEMPORARY BRACING.

D

VP Buildings
3200 Players Club Circle Memphis TN 38125

REV	DATE	BY	DESCRIPTION

NTS

SECONDARY ELEVATION AT 13

BUILDER	Rule Steel
CUSTOMER	
LOCATION	Clark, Colorado
PROJECT	DC Riding Arena
BUILDERS PO#	

VP BUILDINGS
VARCO PRUDEN
A BlueScope Steel Company
VPC VERSION: **2021.2a**

JOBNO	21-007748-01
DATE	09/08/2021
DRAWN/CHECK	SDA SDA
PAGE	27

MODIFIED IN AUTOCAD

FILENAME: E:\Divya selvaraj\CURRENT JOB\21-007748-01_permit\02 - OUTGOING\05 - PERMIT\CAD\26_DC Riding Arena Option 2_SECONDARY ELEVATION AT 13.dwg

SAVE DATE: 9/8/2021 **SAVE TIME:** 15:46:18 **LAST SAVED BY:** jkanagaraj

a division of BlueScope Buildings North America, Inc.

Bracing Part Schedule

Part	Qty	Length	Detail
10RU2207	4	22'-7"	BR02K1
10RU2708	4	27'-8"	BR02K1

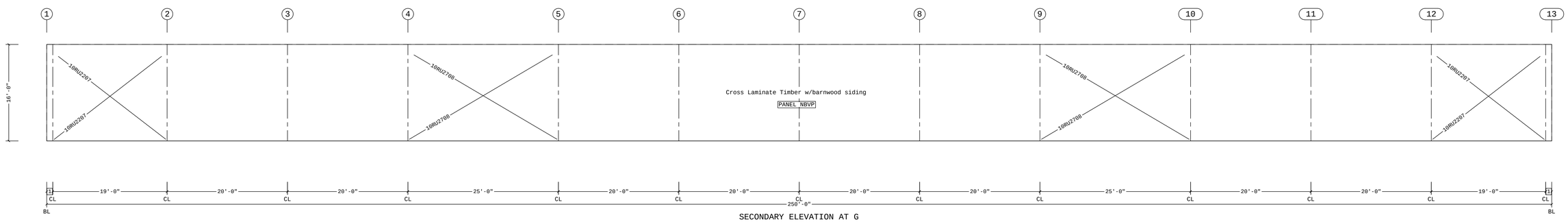

SECONDARY ELEVATION AT G

REVIEWED FOR CODE COMPLIANCE
01/27/2022

COLORADO LICENSED PROFESSIONAL ENGINEER MANUEL M. NUÑEZ 0052792

09/10/2021

1 1'-0"

☐ Dimension Key

Shape Name = Riding Arena, Wall = 4

PERMIT SET- For Building Dept. Approval

1. UNLESS NOTED, USE 1/2 X 1 1/2 A325T BOLT (49080) AND NUT (47120) W/O WASHERS. SNUG TIGHTEN BOLTS FOR ALL SECONDARY CONNECTIONS.
2. FLANGE BRACES ARE AN INTEGRAL PART OF THE STABILITY OF THE STRUCTURAL SYSTEM AND MUST BE PROPERLY INSTALLED PRIOR TO ERECTION OF WALL AND ROOF SHEETS.
3. REMOVAL OR ALTERATION OF ANY COMPONENT IS PROHIBITED.

THE VP ENGINEER'S SEAL APPLIES ONLY TO THE WORK PRODUCT OF VP AND DESIGN AND PERFORMANCE REQUIREMENTS SPECIFIED BY VP. THE VP ENGINEER'S SEAL DOES NOT APPLY TO THE PERFORMANCE OR DESIGN OF ANY OTHER PRODUCT OR COMPONENT FURNISHED BY VP EXCEPT TO ANY DESIGN OR PERFORMANCE REQUIREMENTS SPECIFIED BY VP.

THIS DRAWING, INCLUDING THE INFORMATION HEREON, REMAINS THE PROPERTY OF VP BUILDINGS. IT IS PROVIDED SOLELY FOR ERECTING THE BUILDING DESCRIBED IN THE APPLICABLE PURCHASE ORDER AND MAY BE REPRODUCED ONLY FOR THAT PURPOSE. IT SHALL NOT BE MODIFIED, REPRODUCED OR USED FOR ANY OTHER PURPOSE WITHOUT PRIOR WRITTEN APPROVAL OF VP BUILDINGS.

THE GENERAL CONTRACTOR AND/OR ERECTOR IS SOLELY RESPONSIBLE FOR ACCURATE GOOD QUALITY WORKMANSHIP IN ERECTING THIS BUILDING IN ACCORDANCE WITH THIS DRAWING, DETAILS REFERENCED IN THIS DRAWING, ALL APPLICABLE VP BUILDINGS ERECTION GUIDES, AND INDUSTRY STANDARDS PERTAINING TO PROPER ERECTION, INCLUDING THE CORRECT USE OF TEMPORARY BRACING.

D

VP Buildings
3200 Players Club Circle Memphis TN 38125

REV	DATE	BY	DESCRIPTION

NTS

SECONDARY ELEVATION AT G

BUILDER	Rule Steel
CUSTOMER	
LOCATION	Clark, Colorado
PROJECT	DC Riding Arena
BUILDERS PO#	

VP BUILDINGS
VARCO PRUDEN
A BlueScope Steel Company
VPC VERSION: 2021.2a

JOBNO	21-007748-01
DATE	09/08/2021
DRAWN/CHECK	SDA SDA
PAGE	28

MODIFIED IN AUTOCAD

ROD DIA.	CLEVIS MARK NO.	CLEVIS PIN DIA.
3/8"	097572	1 1/4"
1/2"	097573	
5/8"	095277	
3/4"	095278	
7/8"	095279	
1"	095280	
1 1/8"	095281	
1 1/4"	095282	
1 3/8"	097593	1 1/2"
1 1/2"	097594	

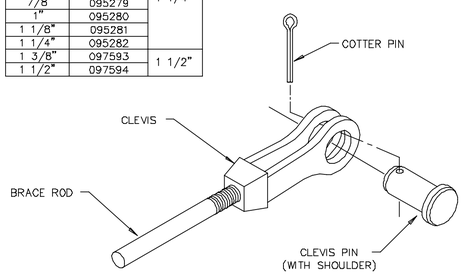

MAY BE FURNISHED WITHOUT A SHOULDER, THEN TWO COTTER PIN WILL BE PROVIDED.

REV. DATE:06/23/11 | REV. NO. 03 | BR02K1 | ROD BRACING CLEVIS ASSEMBLY

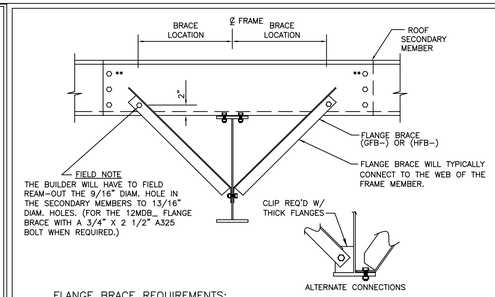

FLANGE BRACE REQUIREMENTS:

RULE#1– ALL FLANGE BRACES ON CROSS SECTIONS MUST BE INSTALLED.
RULE#2– SINGLE FLANGE BRACES ARE REQUIRED WHEN PART MARK ON CROSS SECTION IS NOT ACCOMPANIED BY (2).
RULE#3– FLANGE BRACES ARE REQUIRED BOTH SIDES OF THE FRAME WEB WHEN PART MARK IS ACCOMPANIED BY (2).
RULE#4– WHENEVER POSSIBLE, PLACE SINGLE BRACES TOWARD THE CENTER OF THE BUILDING.
RULE#5– WHENEVER POSSIBLE, PLACE ALL SINGLE BRACES ON THE SAME SIDE OF THE FRAME WEB.

** 10" & 11 1/2" PURLINS REQUIRE 3 BOLTS AT EACH END OF PURLIN LAP.

REV. DATE:05/08/18 | REV. NO. 02 | BR06AE | TYPICAL FLANGE BRACE CONNECTIONS CONT. PURLIN LAP SHOWN, CONT. GIRT & SIMPLE PURLIN

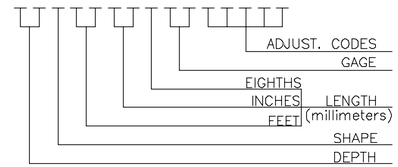

DEPTH	SHAPE	GAGE
07 = 7"	Z = ZEE	11 = 0.113
08 = 8 1/2"	C = CEE	12 = 0.098
10 = 10"	E = LOW EAVE STRUT	13 = 0.088
11 = 11 1/2"	H = HIGH EAVE STRUT	14 = 0.079
		15 = 0.073
		16 = 0.068
		17 = 0.060

REV. DATE:07/01/09 | REV. NO. 00 | EN51B1 | SECONDARY PART MARK NUMBER COMMON GENERATED MARK NUMBERS

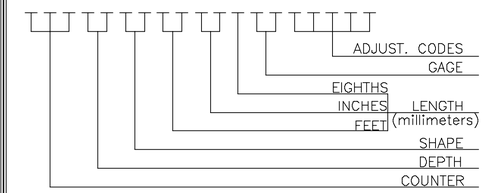

DEPTH	SHAPE	GAGE
07 = 7"	ZS = ZEE	11 = 0.113
08 = 8 1/2"	CS = CEE	12 = 0.098
10 = 10"	ES = LOW EAVE STRUT	13 = 0.088
11 = 11 1/2"	HS = HIGH EAVE STRUT	14 = 0.079
	BB = BACK TO BACK CEE	15 = 0.073
	FB = FACE TO BACK CEE	16 = 0.068
	FF = FACE TO FACE CEE	17 = 0.060

REV. DATE:07/01/09 | REV. NO. 00 | EN51B2 | SPECIAL SECONDARY PART MARK KEY COMMON GENERATED MARK NUMBERS

ERECTION DRAWING PART MARK

C P R 1 W 1 B 3

- BAY NUMBER
- CANOPY (C)/PARTITION(P)/ ROOF(R)/WALL(W) NUMBER
- BUILDING SHAPE

THE BAY/BUNDLE CODE IDENTIFIES THE BUILDING CANOPY/PARTITION/ ROOF/WALL PLANE AND BAY

REV. DATE:01/31/13 | REV. NO. 01 | EN51B3 | SECONDARY BUNDLE LOCATION KEY ALL SECONDARY DEPTHS

REVIEWED FOR CODE COMPLIANCE 01/27/2022

COLORADO LICENSED MANUEL M. WEBER 0052792 PROFESSIONAL ENGINEER

09/10/2021

PERMIT SET- For Building Dept. Approval

1. UNLESS NOTED, USE 1/2 X 1 1/2 A325T BOLT (49080) AND NUT (47120) W/O WASHERS. SNUG TIGHTEN BOLTS FOR ALL SECONDARY CONNECTIONS.
2. FLANGE BRACES ARE AN INTEGRAL PART OF THE STABILITY OF THE STRUCTURAL SYSTEM AND MUST BE PROPERLY INSTALLED PRIOR TO ERECTION OF WALL AND ROOF SHEETS.
3. REMOVAL OR ALTERATION OF ANY COMPONENT IS PROHIBITED.

THE VP ENGINEER'S SEAL APPLIES ONLY TO THE WORK PRODUCT OF VP AND DESIGN AND PERFORMANCE REQUIREMENTS SPECIFIED BY VP. THE VP ENGINEER'S SEAL DOES NOT APPLY TO THE PERFORMANCE OR DESIGN OF ANY OTHER PRODUCT OR COMPONENT FURNISHED BY VP EXCEPT TO ANY DESIGN OR PERFORMANCE REQUIREMENTS SPECIFIED BY VP.

THIS DRAWING, INCLUDING THE INFORMATION HEREON, REMAINS THE PROPERTY OF VP BUILDINGS. IT IS PROVIDED SOLELY FOR ERECTING THE BUILDING DESCRIBED IN THE APPLICABLE PURCHASE ORDER AND MAY BE REPRODUCED ONLY FOR THAT PURPOSE. IT SHALL NOT BE MODIFIED, REPRODUCED OR USED FOR ANY OTHER PURPOSE WITHOUT PRIOR WRITTEN APPROVAL OF VP BUILDINGS.

THE GENERAL CONTRACTOR AND/OR ERECTOR IS SOLELY RESPONSIBLE FOR ACCURATE GOOD QUALITY WORKMANSHIP IN ERECTING THIS BUILDING IN ACCORDANCE WITH THIS DRAWING, DETAILS REFERENCED IN THIS DRAWING, ALL APPLICABLE VP BUILDINGS ERECTION GUIDES, AND INDUSTRY STANDARDS PERTAINING TO PROPER ERECTION, INCLUDING THE CORRECT USE OF TEMPORARY BRACING.

D

VP Buildings
3200 Players Club Circle Memphis TN 38125

REV	DATE	BY	DESCRIPTION

NTS

9/8/2021 SEDSheet 12:32:48

WALL SECONDARY SED'S

BUILDER	Rule Steel
CUSTOMER	
LOCATION	Clark, Colorado
PROJECT	DC Riding Arena
BUILDERS PO#	
FILENAME:	DC Riding Arena Option 2

VP BUILDINGS VARCO PRUDEN
A BlueScope Steel Company
VPC VERSION: 2021.2a

JOBNO	21-07748-01
DATE	09/08/2021
DRAWN/CHECK	SDA SDA
PAGE	29

a division of BlueScope Buildings North America, Inc.

Covering Schedule

Id	Qty	Length	Type	Gage	OP	Fin.	Color	Direction
#9	86	39'-6"	PR	26	1	K	KB	Left to Right
#1	86	26'-4"	PR	26	1	K	KB	Left to Right
#2	86	3'-8"	PR	26	3	K	KB	Left to Right
#3	86	39'-6"	PR	26	1	K	KB	Right to Left
#4	86	26'-4"	PR	26	1	K	KB	Right to Left
#6	2	15'-8"	PR	26	1	K	KB	Right to Left
#12	2	15'-8"	PR	26	1	K	KB	Left to Right

Oper. Code:1=SQ, SQ
Oper. Code:3=SQ, SQ
Finish:K=KXL (Kynar)
Color:KB=Cool Dark Bronze

Trim Schedule

Id	Parts	Qty	Color	Details
T1	(4)RKF16, (7)STC10C	63'-2 15/16"	Cool Dark Bronze	RC30LC, RS10R1
T2	PRC, SPC40	1	Cool Dark Bronze	RC38C4
T3	(4)RKF16, (7)STC10C	63'-2 15/16"	Cool Dark Bronze	RC30LC, RS10R1
T4	PRC, SPC40	1	Cool Dark Bronze	RC38C4
T5	RKF10, STC10C	3'-6 11/16"	Cool Dark Bronze	RC30LC, RS10R1
T6	(26)GAD1450, (26)GRA10, (13)EG204, (26)SET10B, (88)STR2	256'-9"	Cool Dark Bronze	RC03B1, RC39A3, RCV010, RCV324
T7	(2)5CE75, CP510	3'-6 11/16"	Cool Dark Bronze	RC38R1
T8	BS1, FPRF1, GGC4, MCC1	1	Cool Dark Bronze	RC38N1
T9	RKF10, STC10C	3'-6 11/16"	Cool Dark Bronze	RC30LC, RS10R1
T10	(26)GAD1450, (26)GRA10, (13)EG204, (26)SET10B, (88)STR2	256'-9"	Cool Dark Bronze	RC03B1, RC39A3, RCV010, RCV324
T11	(2)5CE75, CP510	3'-6 11/16"	Cool Dark Bronze	RC38R1
T12	BS1, FPRF1, GGC4, MCC1	1	Cool Dark Bronze	RC38N1

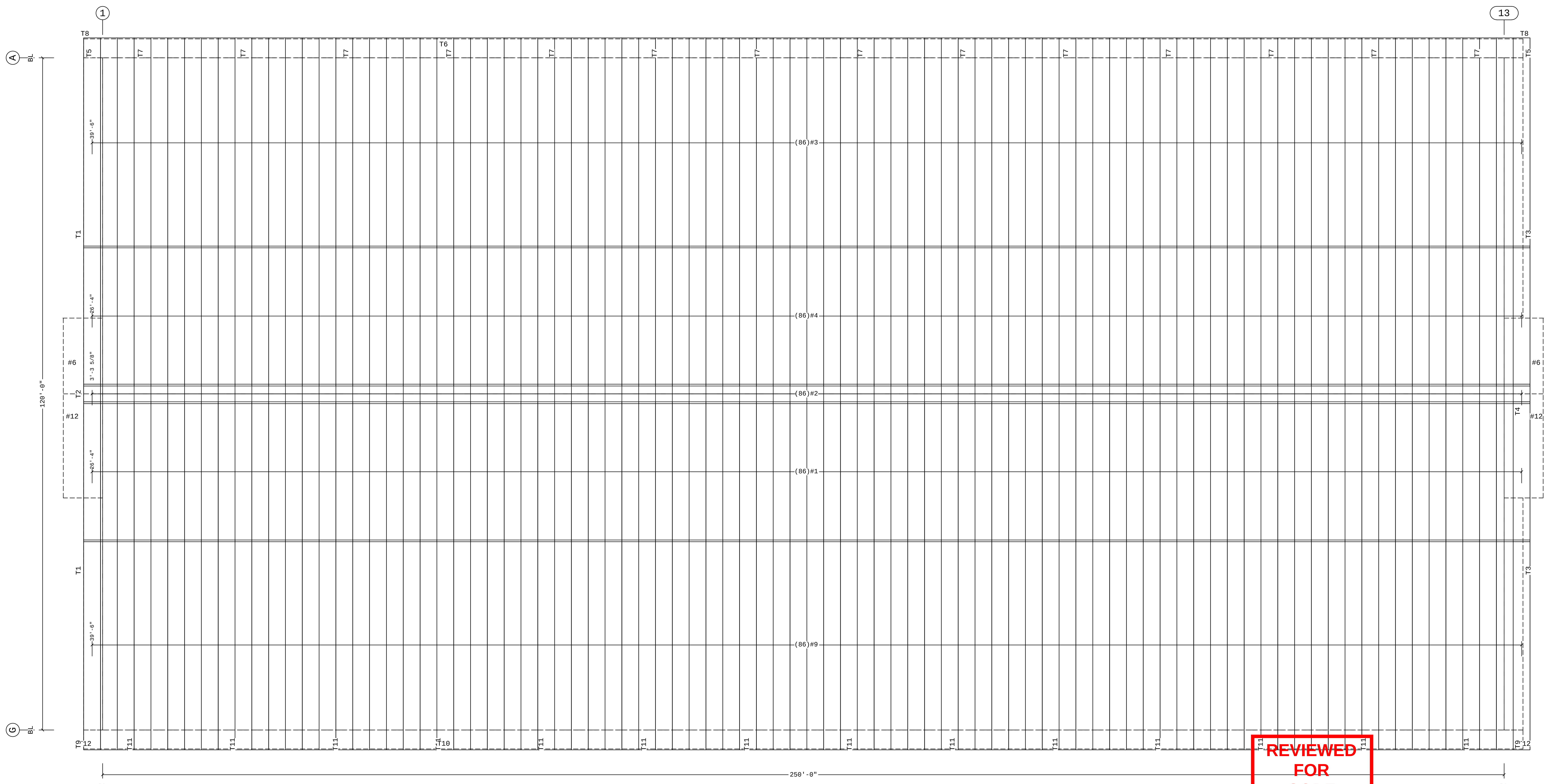

ROOF COVERING PLAN

Fastener Schedule

Part	Description
0097585-105	(T-2) #12-14 x 1 1/2", 5/16" Hex Hd, SS Cap w/Washer
Roof Struct 1 1/2 SS	(T-2) #12-14 x 1 1/2", 5/16" Hex Hd, SS Cap w/Washer
0097581-105	(T-1) 1/4-14 x 7/8", 5/16" Hex Hd, SS Cap w/Washer

REVIEWED FOR CODE COMPLIANCE 01/27/2022

COLORADO LICENSED PROFESSIONAL ENGINEER
MANUEL M. WIEBER
0052792

09/10/2021

Shape Name = Riding Arena, Shape = Riding Arena, Shape = Riding Arena

PERMIT SET- For Building Dept. Approval

1. PRE-DRILLING 1/8 DIAMETER HOLES FOR STRUCTURAL FASTENERS MAY BE REQUIRED FOR HEAVY GAGE NESTED ZEE's AND/OR FASTENERS TO STRUCTURAL BEAMS
2. STEEL PANELS ARE AN INTEGRAL PART OF THE STRUCTURAL SYSTEM. REMOVAL OR ALTERATION WITHOUT PRIOR AUTHORIZATION IS PROHIBITED.
3. DUE TO MANUFACTURING LIMITATIONS SHORT PANELS MAY REQUIRE FIELD CUTTING, SEE THE COVERING SCHEDULE FOR CUT LENGTHS.
4. SEE JOB DETAILS FOR COVERING AND TRIM FASTENER SPECIFICATION.

THE VP ENGINEER'S SEAL APPLIES ONLY TO THE WORK PRODUCT OF VP AND DESIGN AND PERFORMANCE REQUIREMENTS SPECIFIED BY VP. THE VP ENGINEER'S SEAL DOES NOT APPLY TO THE PERFORMANCE OR DESIGN OF ANY OTHER PRODUCT OR COMPONENT FURNISHED BY VP EXCEPT TO ANY DESIGN OR PERFORMANCE REQUIREMENTS SPECIFIED BY VP.

THIS DRAWING, INCLUDING THE INFORMATION HEREON, REMAINS THE PROPERTY OF VP BUILDINGS. IT IS PROVIDED SOLELY FOR ERECTING THE BUILDING DESCRIBED IN THE APPLICABLE PURCHASE ORDER AND MAY BE REPRODUCED ONLY FOR THAT PURPOSE. IT SHALL NOT BE MODIFIED, REPRODUCED OR USED FOR ANY OTHER PURPOSE WITHOUT PRIOR WRITTEN APPROVAL OF VP BUILDINGS.

THE GENERAL CONTRACTOR AND/OR ERECTOR IS SOLELY RESPONSIBLE FOR ACCURATE GOOD QUALITY WORKMANSHIP IN ERECTING THIS BUILDING IN ACCORDANCE WITH THIS DRAWING, DETAILS REFERENCED IN THIS DRAWING, ALL APPLICABLE VP BUILDINGS ERECTION GUIDES, AND INDUSTRY STANDARDS PERTAINING TO PROPER ERECTION, INCLUDING THE CORRECT USE OF TEMPORARY BRACING.

D

VP Buildings
3200 Players Club Circle Memphis TN 38125

ROOF COVERING PLAN

REV	DATE	BY	DESCRIPTION

NTS

BUILDER: Rule Steel
CUSTOMER:
LOCATION: Clark, Colorado
PROJECT: DC Riding Arena
BUILDERS PO#:

VP BUILDINGS
VARCO PRUDEN
A BlueScope Steel Company
VPC VERSION: **2021.2a**

JOBNO: 21-007748-01
DATE: 09/08/2021
DRAWN/CHECK: SDA SDA
PAGE: 30

MODIFIED IN AUTOCAD

FILENAME: **E:\Divya selvaraj\CURRENT JOB\21-007748-01_permit\02 - OUTGOING\05 - PERMIT\CAD\29_DC Riding Arena Option 2_ROOF COVERING PLAN.dwg**

SAVE DATE: 9/8/2021 SAVE TIME: 15:46:26 LAST SAVED BY: jkanagaraj

a division of BlueScope Buildings North America, Inc.

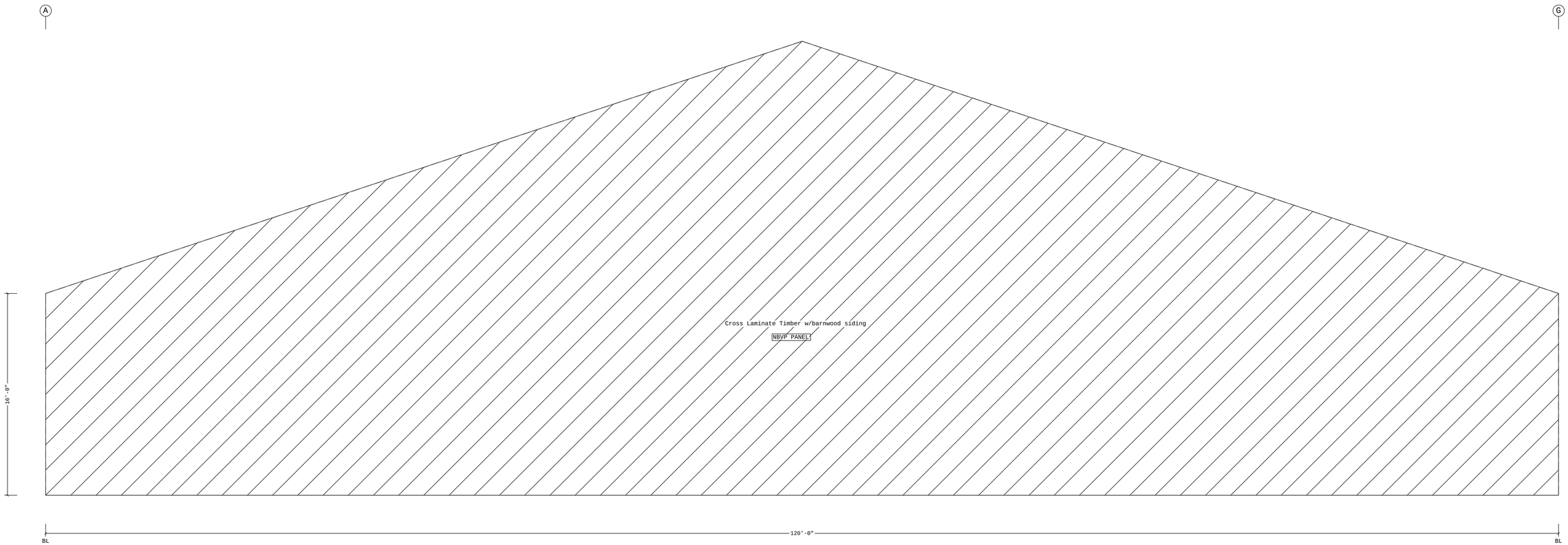

COVERING ELEVATION AT 1

REVIEWED FOR CODE COMPLIANCE 01/27/2022

COLORADO LICENSED PROFESSIONAL ENGINEER MANUEL M. WEBER 0052792

09/10/2021

Shape Name = Riding Arena, Wall = 1

PERMIT SET- For Building Dept. Approval

1. PRE-DRILLING 1/8 DIAMETER HOLES FOR STRUCTURAL FASTENERS MAY BE REQUIRED FOR HEAVY GAGE NESTED ZEE's AND/OR FASTENERS TO STRUCTURAL BEAMS
2. STEEL PANELS ARE AN INTEGRAL PART OF THE STRUCTURAL SYSTEM. REMOVAL OR ALTERATION WITHOUT PRIOR AUTHORIZATION IS PROHIBITED.
3. DUE TO MANUFACTURING LIMITATIONS SHORT PANELS MAY REQUIRE FIELD CUTTING, SEE THE COVERING SCHEDULE FOR CUT LENGTHS.
4. SEE JOB DETAILS FOR COVERING AND TRIM FASTENER SPECIFICATION.

THE VP ENGINEER'S SEAL APPLIES ONLY TO THE WORK PRODUCT OF VP AND DESIGN AND PERFORMANCE REQUIREMENTS SPECIFIED BY VP. THE VP ENGINEER'S SEAL DOES NOT APPLY TO THE PERFORMANCE OR DESIGN OF ANY OTHER PRODUCT OR COMPONENT FURNISHED BY VP EXCEPT TO ANY DESIGN OR PERFORMANCE REQUIREMENTS SPECIFIED BY VP.

THIS DRAWING, INCLUDING THE INFORMATION HEREON, REMAINS THE PROPERTY OF VP BUILDINGS. IT IS PROVIDED SOLELY FOR ERECTING THE BUILDING DESCRIBED IN THE APPLICABLE PURCHASE ORDER AND MAY BE REPRODUCED ONLY FOR THAT PURPOSE. IT SHALL NOT BE MODIFIED, REPRODUCED OR USED FOR ANY OTHER PURPOSE WITHOUT PRIOR WRITTEN APPROVAL OF VP BUILDINGS.

THE GENERAL CONTRACTOR AND/OR ERECTOR IS SOLELY RESPONSIBLE FOR ACCURATE GOOD QUALITY WORKMANSHIP IN ERECTING THIS BUILDING IN ACCORDANCE WITH THIS DRAWING, DETAILS REFERENCED IN THIS DRAWING, ALL APPLICABLE VP BUILDINGS ERECTION GUIDES, AND INDUSTRY STANDARDS PERTAINING TO PROPER ERECTION, INCLUDING THE CORRECT USE OF TEMPORARY BRACING.

D

VP Buildings
3200 Players Club Circle Memphis TN 38125

REV	DATE	BY	DESCRIPTION

NTS

COVERING ELEVATION AT 1

BUILDER	Rule Steel
CUSTOMER	
LOCATION	Clark, Colorado
PROJECT	DC Riding Arena
BUILDERS PO#	

VP BUILDINGS
VARCO PRUDEN
A BlueScope Steel Company
VPC VERSION: **2021.2a**

JOBNO	21-007748-01
DATE	09/08/2021
DRAWN/CHECK	SDA SDA
PAGE	31

MODIFIED IN AUTOCAD

FILENAME: E:\Divya selvaraj\CURRENT JOB\21-007748-01_permit\02 - OUTGOING\05 - PERMIT\CAD\30_DC Riding Arena Option 2_COVERING ELEVATION AT 1.dwg **SAVE DATE:** 9/8/2021 **SAVE TIME:** 15:46:30 **LAST SAVED BY:** jkanagaraj

Trim Schedule

Id	Parts	Qty	Color	Details
T1	(25)PCA10B	250'-0"	Cool Dark Bronze	WC11F1, WC11F4
T2	5CE75, (2)CP510, DN1, (4)DST1	16'-0"	Cool Dark Bronze	RC38P1

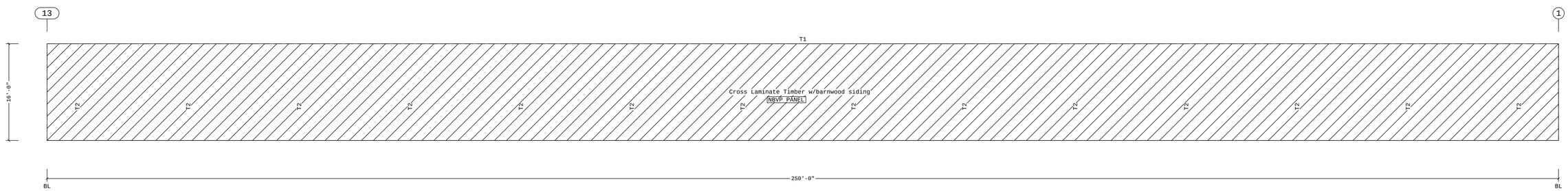

COVERING ELEVATION AT A

REVIEWED FOR CODE COMPLIANCE 01/27/2022

COLORADO LICENSED MANUEL M. WEBER 0052792 PROFESSIONAL ENGINEER

09/10/2021

Shape Name = Riding Arena, Wall = 2

PERMIT SET- For Building Dept. Approval

1. PRE-DRILLING 1/8 DIAMETER HOLES FOR STRUCTURAL FASTENERS MAY BE REQUIRED FOR HEAVY GAGE NESTED ZEE's AND/OR FASTENERS TO STRUCTURAL BEAMS
2. STEEL PANELS ARE AN INTEGRAL PART OF THE STRUCTURAL SYSTEM. REMOVAL OR ALTERATION WITHOUT PRIOR AUTHORIZATION IS PROHIBITED.
3. DUE TO MANUFACTURING LIMITATIONS SHORT PANELS MAY REQUIRE FIELD CUTTING, SEE THE COVERING SCHEDULE FOR CUT LENGTHS.
4. SEE JOB DETAILS FOR COVERING AND TRIM FASTENER SPECIFICATION.

THE VP ENGINEER'S SEAL APPLIES ONLY TO THE WORK PRODUCT OF VP AND DESIGN AND PERFORMANCE REQUIREMENTS SPECIFIED BY VP. THE VP ENGINEER'S SEAL DOES NOT APPLY TO THE PERFORMANCE OR DESIGN OF ANY OTHER PRODUCT OR COMPONENT FURNISHED BY VP EXCEPT TO ANY DESIGN OR PERFORMANCE REQUIREMENTS SPECIFIED BY VP.

THIS DRAWING, INCLUDING THE INFORMATION HEREON, REMAINS THE PROPERTY OF VP BUILDINGS. IT IS PROVIDED SOLELY FOR ERECTING THE BUILDING DESCRIBED IN THE APPLICABLE PURCHASE ORDER AND MAY BE REPRODUCED ONLY FOR THAT PURPOSE. IT SHALL NOT BE MODIFIED, REPRODUCED OR USED FOR ANY OTHER PURPOSE WITHOUT PRIOR WRITTEN APPROVAL OF VP BUILDINGS.

THE GENERAL CONTRACTOR AND/OR ERECTOR IS SOLELY RESPONSIBLE FOR ACCURATE GOOD QUALITY WORKMANSHIP IN ERECTING THIS BUILDING IN ACCORDANCE WITH THIS DRAWING, DETAILS REFERENCED IN THIS DRAWING, ALL APPLICABLE VP BUILDINGS ERECTION GUIDES, AND INDUSTRY STANDARDS PERTAINING TO PROPER ERECTION, INCLUDING THE CORRECT USE OF TEMPORARY BRACING.

D

VP Buildings
3200 Players Club Circle Memphis TN 38125

REV	DATE	BY	DESCRIPTION

NTS

COVERING ELEVATION AT A

BUILDER	Rule Steel
CUSTOMER	
LOCATION	Clark, Colorado
PROJECT	DC Riding Arena
BUILDERS PO#	

VP BUILDINGS
VARCO PRUDEN
A BlueScope Steel Company
VPC VERSION: **2021.2a**

JOBNO	21-007748-01
DATE	09/08/2021
DRAWN/CHECK	SDA SDA
PAGE	32

MODIFIED IN AUTOCAD

a division of BlueScope Buildings North America, Inc.

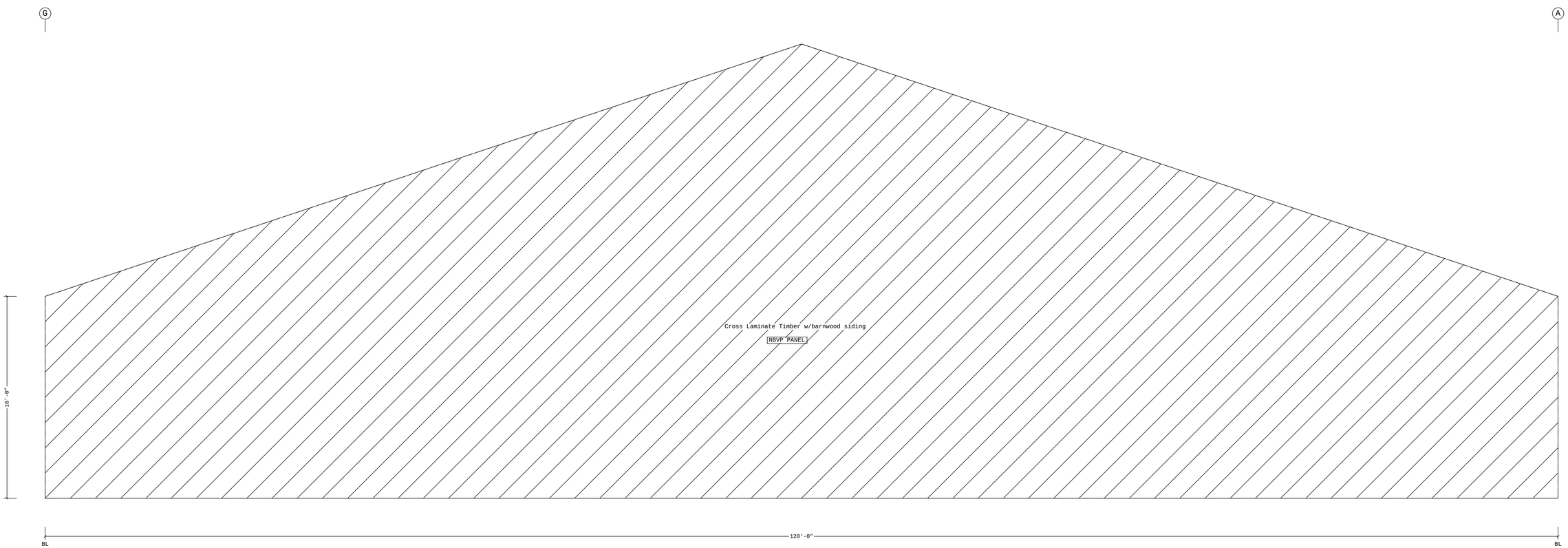

COVERING ELEVATION AT 13

REVIEWED FOR CODE COMPLIANCE
01/27/2022

COLORADO LICENSED
MANUEL M. WEBER
0052792
PROFESSIONAL ENGINEER

09/10/2021

Shape Name = Riding Arena, Wall = 3

PERMIT SET- For Building Dept. Approval

1. PRE-DRILLING 1/8 DIAMETER HOLES FOR STRUCTURAL FASTENERS MAY BE REQUIRED FOR HEAVY GAGE NESTED ZEE's AND/OR FASTENERS TO STRUCTURAL BEAMS
2. STEEL PANELS ARE AN INTEGRAL PART OF THE STRUCTURAL SYSTEM. REMOVAL OR ALTERATION WITHOUT PRIOR AUTHORIZATION IS PROHIBITED.
3. DUE TO MANUFACTURING LIMITATIONS SHORT PANELS MAY REQUIRE FIELD CUTTING, SEE THE COVERING SCHEDULE FOR CUT LENGTHS.
4. SEE JOB DETAILS FOR COVERING AND TRIM FASTENER SPECIFICATION.

THE VP ENGINEER'S SEAL APPLIES ONLY TO THE WORK PRODUCT OF VP AND DESIGN AND PERFORMANCE REQUIREMENTS SPECIFIED BY VP. THE VP ENGINEER'S SEAL DOES NOT APPLY TO THE PERFORMANCE OR DESIGN OF ANY OTHER PRODUCT OR COMPONENT FURNISHED BY VP EXCEPT TO ANY DESIGN OR PERFORMANCE REQUIREMENTS SPECIFIED BY VP.

THIS DRAWING, INCLUDING THE INFORMATION HEREON, REMAINS THE PROPERTY OF VP BUILDINGS. IT IS PROVIDED SOLELY FOR ERECTING THE BUILDING DESCRIBED IN THE APPLICABLE PURCHASE ORDER AND MAY BE REPRODUCED ONLY FOR THAT PURPOSE. IT SHALL NOT BE MODIFIED, REPRODUCED OR USED FOR ANY OTHER PURPOSE WITHOUT PRIOR WRITTEN APPROVAL OF VP BUILDINGS.

THE GENERAL CONTRACTOR AND/OR ERECTOR IS SOLELY RESPONSIBLE FOR ACCURATE GOOD QUALITY WORKMANSHIP IN ERECTING THIS BUILDING IN ACCORDANCE WITH THIS DRAWING, DETAILS REFERENCED IN THIS DRAWING, ALL APPLICABLE VP BUILDINGS ERECTION GUIDES, AND INDUSTRY STANDARDS PERTAINING TO PROPER ERECTION, INCLUDING THE CORRECT USE OF TEMPORARY BRACING.

D

VP Buildings
3200 Players Club Circle Memphis TN 38125

REV	DATE	BY	DESCRIPTION

NTS

COVERING ELEVATION AT 13

BUILDER	Rule Steel
CUSTOMER	
LOCATION	Clark, Colorado
PROJECT	DC Riding Arena
BUILDERS PO#	

VP BUILDINGS
VARCO PRUDEN
A BlueScope Steel Company
VPC VERSION: **2021.2a**

JOBNO	21-007748-01
DATE	09/08/2021
DRAWN/CHECK	SDA SDA
PAGE	33

MODIFIED IN AUTOCAD

FILENAME: E:\Divya selvaraj\CURRENT JOB\21-007748-01_permit\02 - OUTGOING\05 - PERMIT\CAD\32_DC Riding Arena Option 2_COVERING ELEVATION AT 13.dwg

SAVE DATE: 9/8/2021 **SAVE TIME:** 15:46:36 **LAST SAVED BY:** jkanagaraj

a division of BlueScope Buildings North America, Inc.

Trim Schedule

Id	Parts	Qty	Color	Details
T1	(25)PCA10B	250'-0"	Cool Dark Bronze	WC11F1, WC11F4
T2	5CE75, (2)CP510, DN1, (4)DST1	16'-0"	Cool Dark Bronze	RC38P1

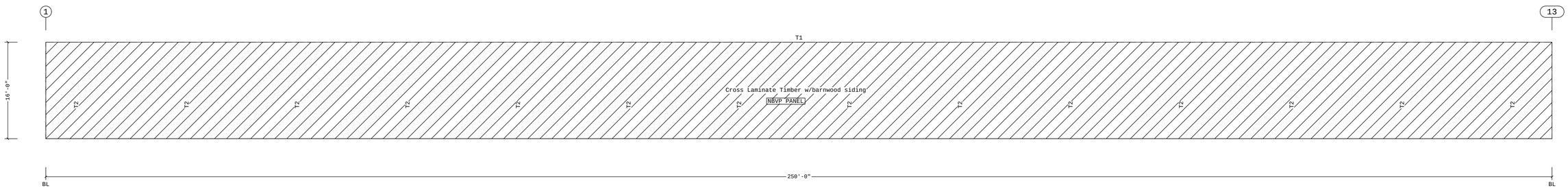

COVERING ELEVATION AT G

REVIEWED FOR CODE COMPLIANCE 01/27/2022

COLORADO LICENSED MANUEL M. WEBER 0052792 PROFESSIONAL ENGINEER

09/10/2021

Shape Name = Riding Arena, Wall = 4

PERMIT SET- For Building Dept. Approval

1. PRE-DRILLING 1/8 DIAMETER HOLES FOR STRUCTURAL FASTENERS MAY BE REQUIRED FOR HEAVY GAGE NESTED ZEE's AND/OR FASTENERS TO STRUCTURAL BEAMS
2. STEEL PANELS ARE AN INTEGRAL PART OF THE STRUCTURAL SYSTEM. REMOVAL OR ALTERATION WITHOUT PRIOR AUTHORIZATION IS PROHIBITED.
3. DUE TO MANUFACTURING LIMITATIONS SHORT PANELS MAY REQUIRE FIELD CUTTING, SEE THE COVERING SCHEDULE FOR CUT LENGTHS.
4. SEE JOB DETAILS FOR COVERING AND TRIM FASTENER SPECIFICATION.

THE VP ENGINEER'S SEAL APPLIES ONLY TO THE WORK PRODUCT OF VP AND DESIGN AND PERFORMANCE REQUIREMENTS SPECIFIED BY VP. THE VP ENGINEER'S SEAL DOES NOT APPLY TO THE PERFORMANCE OR DESIGN OF ANY OTHER PRODUCT OR COMPONENT FURNISHED BY VP EXCEPT TO ANY DESIGN OR PERFORMANCE REQUIREMENTS SPECIFIED BY VP.

THIS DRAWING, INCLUDING THE INFORMATION HEREON, REMAINS THE PROPERTY OF VP BUILDINGS. IT IS PROVIDED SOLELY FOR ERECTING THE BUILDING DESCRIBED IN THE APPLICABLE PURCHASE ORDER AND MAY BE REPRODUCED ONLY FOR THAT PURPOSE. IT SHALL NOT BE MODIFIED, REPRODUCED OR USED FOR ANY OTHER PURPOSE WITHOUT PRIOR WRITTEN APPROVAL OF VP BUILDINGS.

THE GENERAL CONTRACTOR AND/OR ERECTOR IS SOLELY RESPONSIBLE FOR ACCURATE GOOD QUALITY WORKMANSHIP IN ERECTING THIS BUILDING IN ACCORDANCE WITH THIS DRAWING, DETAILS REFERENCED IN THIS DRAWING, ALL APPLICABLE VP BUILDINGS ERECTION GUIDES, AND INDUSTRY STANDARDS PERTAINING TO PROPER ERECTION, INCLUDING THE CORRECT USE OF TEMPORARY BRACING.

D

VP Buildings
3200 Players Club Circle Memphis TN 38125

REV	DATE	BY	DESCRIPTION

NTS

COVERING ELEVATION AT G

BUILDER: Rule Steel
CUSTOMER:
LOCATION: Clark, Colorado
PROJECT: DC Riding Arena
BUILDERS PO#:

VP BUILDINGS
VARCO PRUDEN
A BlueScope Steel Company
VPC VERSION: 2021.2a

JOBNO: 21-007748-01
DATE: 09/08/2021
DRAWN/CHECK: SDA SDA
PAGE: 34

MODIFIED IN AUTOCAD

FILENAME: E:\Divya selvaraj\CURRENT JOB\21-007748-01_permit\02 - OUTGOING\05 - PERMIT\CAD\33_DC Riding Arena Option 2_COVERING ELEVATION AT G.dwg

SAVE DATE: 9/8/2021 SAVE TIME: 15:46:40 LAST SAVED BY: jkanagaraj

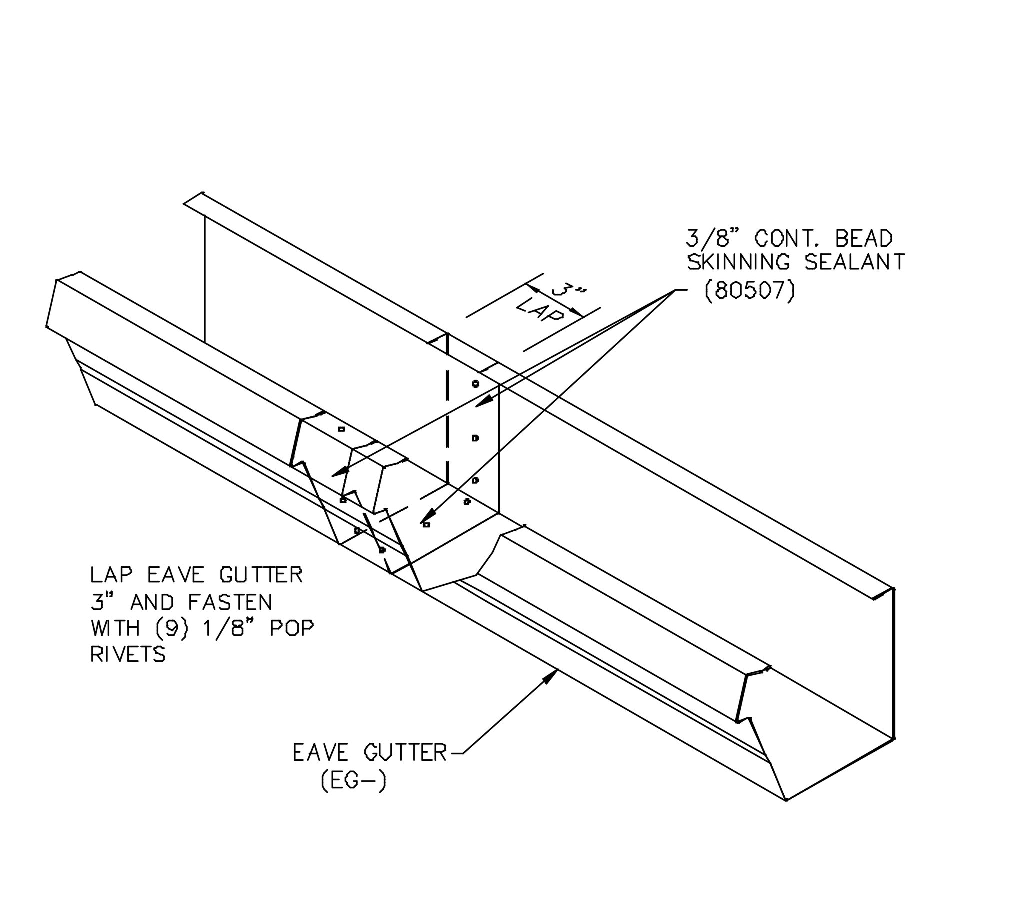

REV. DATE:03/03/15	REV. NO. 00	
RCV324		TRIM SPLICES EAVE GUTTER SPLICE

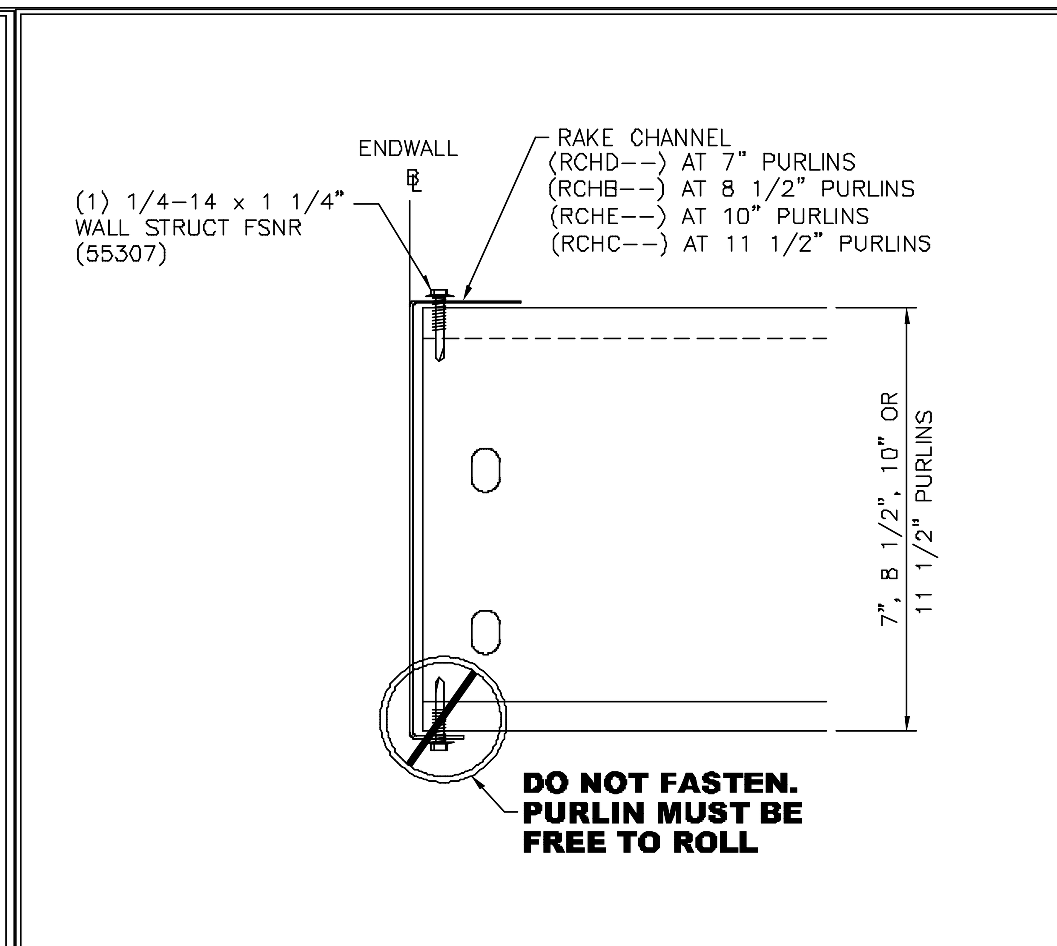

REV. DATE:07/01/09	REV. NO. 00	
RS10R1		PR ROOF RAKE CHANNEL TO PURLIN ALL PURLIN DEPTHS (ALL WALL PANEL)

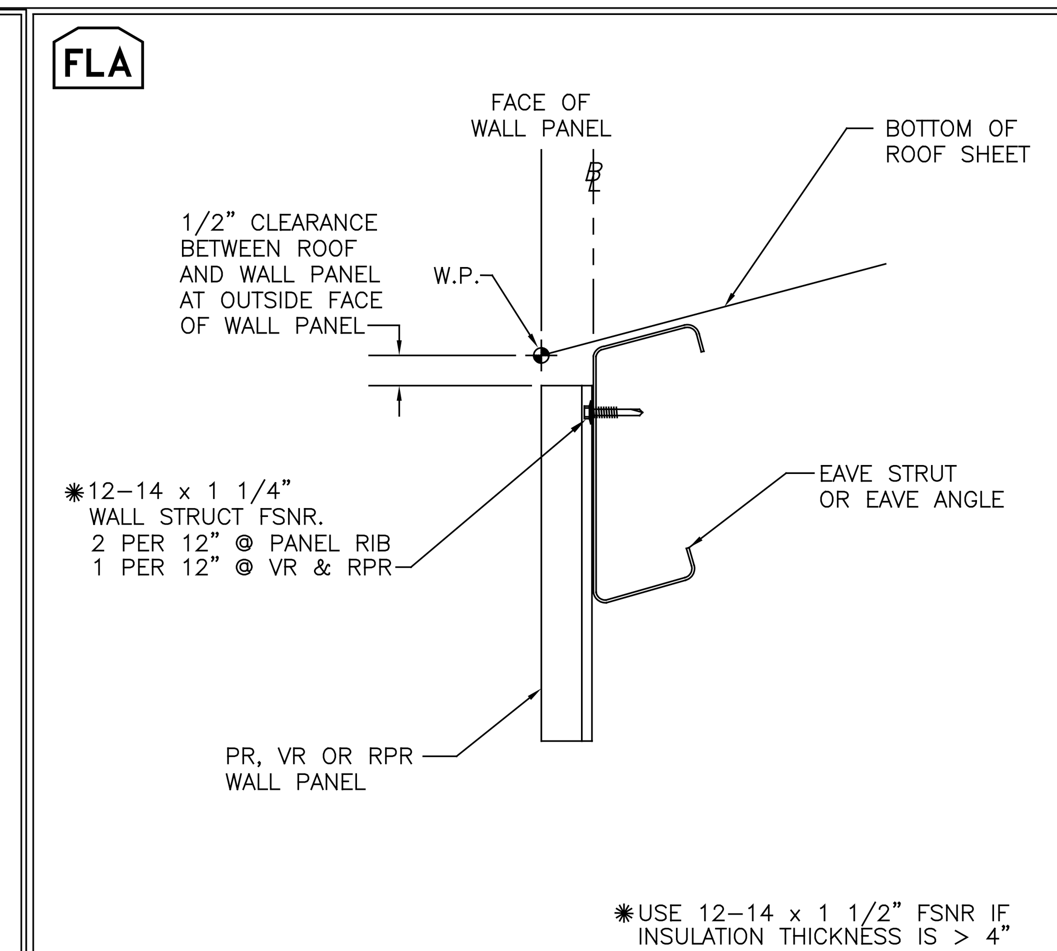

REV. DATE:06/26/19	REV. NO. 04	
WC11F1		PR, VR & RPR WALL AT EAVE STANDARD EAVE MEMBER

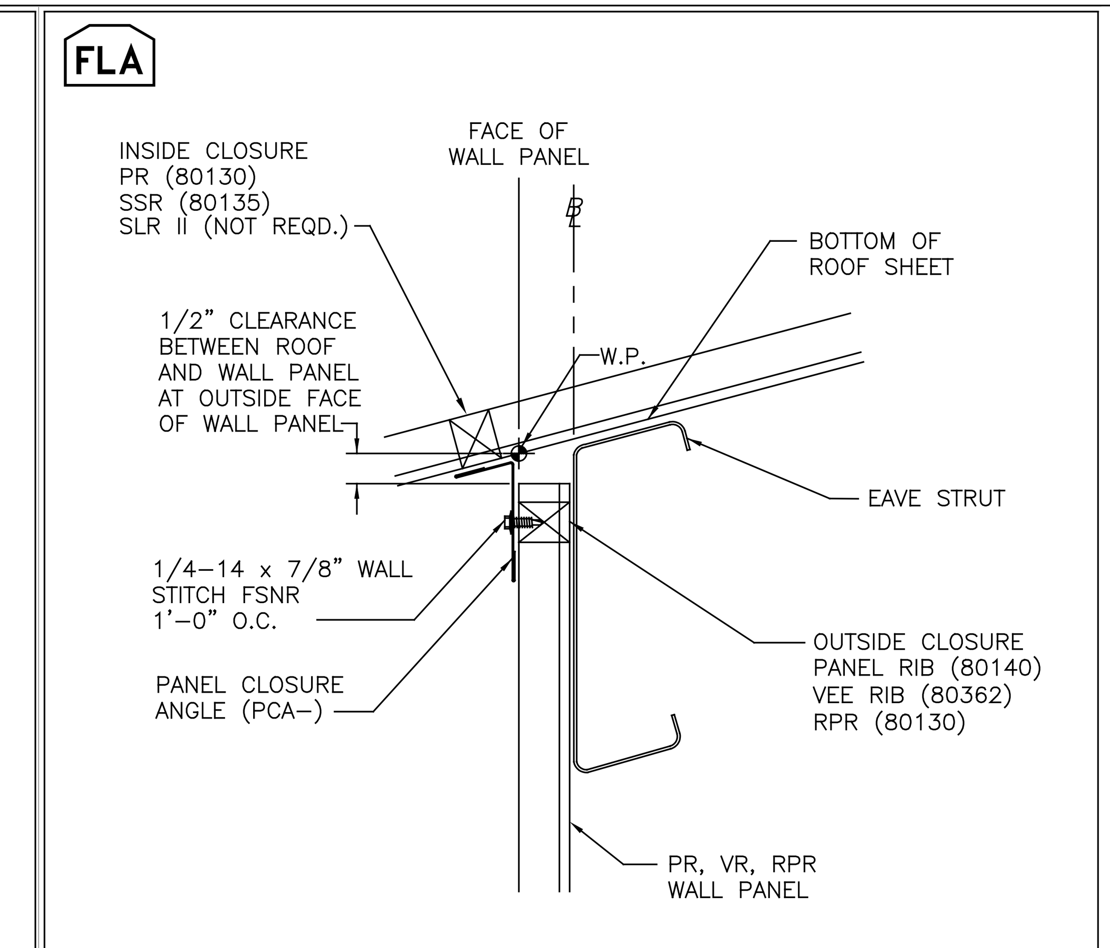

REV. DATE:06/26/19	REV. NO. 06	
WC11F4		WALL AT CANOPY ROOF ALL WALL – ALL ROOFS

REVIEWED FOR CODE COMPLIANCE
01/27/2022

COLORADO LICENSED PROFESSIONAL ENGINEER
AMANUEL M. WUBNEH
0052792
09/10/2021

PERMIT SET- For Building Dept. Approval

THE VP ENGINEER'S SEAL APPLIES ONLY TO THE WORK PRODUCT OF VP AND DESIGN AND PERFORMANCE REQUIREMENTS SPECIFIED BY VP. THE VP ENGINEER'S SEAL DOES NOT APPLY TO THE PERFORMANCE OR DESIGN OF ANY OTHER PRODUCT OR COMPONENT FURNISHED BY VP EXCEPT TO ANY DESIGN OR PERFORMANCE REQUIREMENTS SPECIFIED BY VP.

THIS DRAWING, INCLUDING THE INFORMATION HEREON, REMAINS THE PROPERTY OF VP BUILDINGS. IT IS PROVIDED SOLELY FOR ERECTING THE BUILDING DESCRIBED IN THE APPLICABLE PURCHASE ORDER AND MAY BE REPRODUCED ONLY FOR THAT PURPOSE. IT SHALL NOT BE MODIFIED, REPRODUCED OR USED FOR ANY OTHER PURPOSE WITHOUT PRIOR WRITTEN APPROVAL OF VP BUILDINGS.

THE GENERAL CONTRACTOR AND/OR ERECTOR IS SOLELY RESPONSIBLE FOR ACCURATE GOOD QUALITY WORKMANSHIP IN ERECTING THIS BUILDING IN ACCORDANCE WITH THIS DRAWING, DETAILS REFERENCED IN THIS DRAWING, ALL APPLICABLE VP BUILDINGS ERECTION GUIDES, AND INDUSTRY STANDARDS PERTAINING TO PROPER ERECTION, INCLUDING THE CORRECT USE OF TEMPORARY BRACING.

D

VP Buildings
3200 Players Club Circle Memphis TN 38125

REV	DATE	BY	DESCRIPTION

NTS

9/8/2021 SEDSheet 12:33:02

COVERING & TRIM SED'S

BUILDER	Rule Steel
CUSTOMER	
LOCATION	Clark, Colorado
PROJECT	DC Riding Arena
BUILDERS PO#	
FILENAME:	DC Riding Arena Option 2

VP BUILDINGS
VARCO PRUDEN
A BlueScope Steel Company
VPC VERSION: 2021.2a
a division of BlueScope Buildings North America, Inc.

JOBNO	21-007748-01
DATE	09/08/2021
DRAWN/CHECK	SDA SDA
PAGE	35

PR WALL PANEL MARK NO.: W F F I I E G G O C C C
LENGTH CODE
PR ROOF PANEL MARK NO.: R F F I I E G G O C C C
LENGTH CODE
PR RIDGE PANEL MARK NO.: P F F I I E G G O C C C
LENGTH CODE

F = FEET
I = INCHES
E = EIGHTHS
G = GAGE
O = OPERATION
C = FIN/COLOR

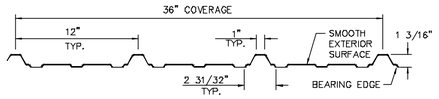

PANEL RIB ROOF AND WALL PANEL (PR)

RPR WALL PANEL MARK NO.: R R F F I I E G G O C C C
LENGTH CODE

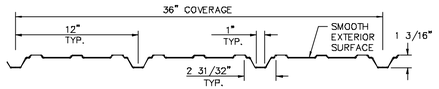

RPR WALL PANEL

REV. DATE:11/17/17 | REV. NO. 01
EN52A1 — PR ROOF & PR/RPR WALL PANELS

PANEL ERECTION GUIDE REQUIRED FOR THIS PROJECT:

REFER TO:

VARCO PRUDEN BUILDINGS

BASIC PANELS & ACCESSORIES

The field guide for correct installation of Varco Pruden's Wall and Roof Systems, Tuff-Lites, Wallites, Doors, Windows, Gutters and Trim.

BACK COVER: 4003 BASIC PANELS AND ACCESSORIES

REV. DATE:01/30/14 | REV. NO. 00
ENV003 — BASIC PANEL AND ACCESSORIES
CONTAINS: PR ROOF – WALLS: PR, RPR, VR

FLA

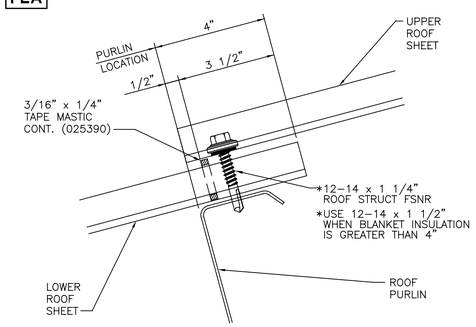

DETAILS QUALIFY FOR AIR INFILTRATION/WATER PENETRATION RATED ASSEMBLIES.

REV. DATE:06/26/19 | REV. NO. 04
RC02B1 — PANEL RIB ROOF–STANDARD
PANEL ENDLAP

FLA

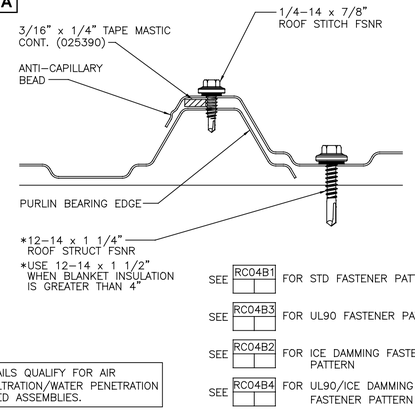

SEE RC04B1 FOR STD FASTENER PATTERN
SEE RC04B3 FOR UL90 FASTENER PATTERN
SEE RC04B2 FOR ICE DAMMING FASTENER PATTERN
SEE RC04B4 FOR UL90/ICE DAMMING FASTENER PATTERN

DETAILS QUALIFY FOR AIR INFILTRATION/WATER PENETRATION RATED ASSEMBLIES.

REV. DATE:06/26/19 | REV. NO. 05
RC03B1 — PANEL RIB ROOF–STANDARD
PANEL SIDELAP

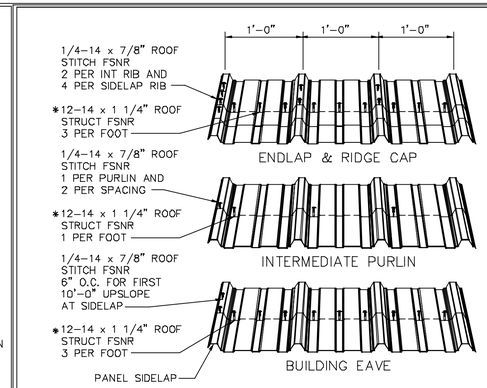

*USE 12–14 x 1 1/2" FASTENER WHEN BLANKET INSULATION THICKNESS IS GREATER THAN 4"

REV. DATE:11/13/13 | REV. NO. 01
RC04B2 — FASTENER PATTERNS
ICE DAMMING

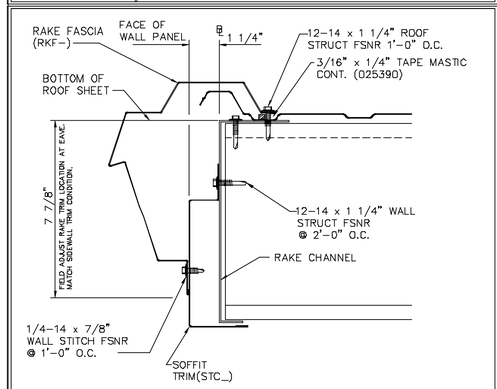

REV. DATE:10/22/12 | REV. NO. 01
RC30LC — PANEL RIB ROOF RAKE TRIM
CANOPY RAKE PR,VR OR RPR PARTIAL WALL

FLA

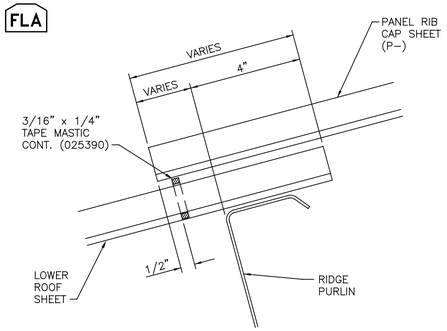

NOTE: SUBSTITUTE 1/8" X 1" TAPE MASTIC (027893) FOR MIAMI–DADE AND BROWARD COUNTY,FL REQUIREMENTS (NOA NO. 14–0123.12)

REV. DATE:06/26/19 | REV. NO. 04
RC34B1 — PANEL RIB ROOF
RIDGE CAP ENDLAP

FLA

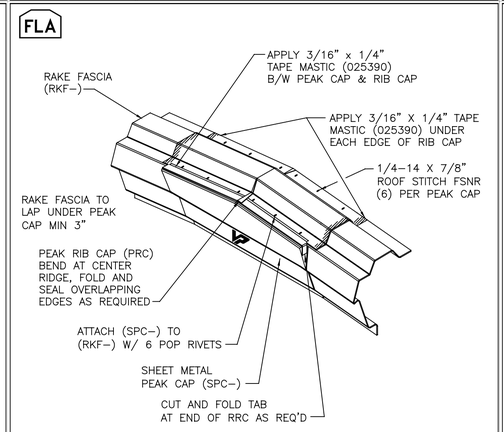

REV. DATE:06/26/19 | REV. NO. 03
RC38C4 — METAL PEAK CAP
TO RAKE FASCIA ATTACHMENT (P–RIB ROOF – ONLY)

FLA

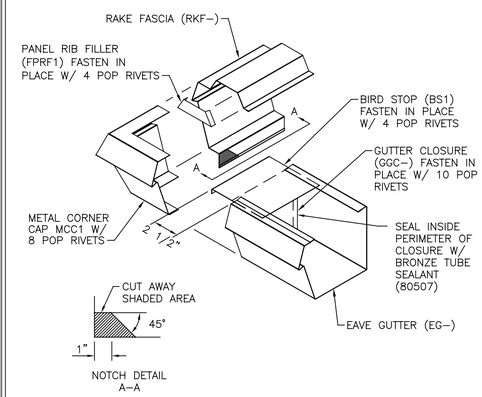

REV. DATE:06/26/19 | REV. NO. 04
RC38N1 — EAVE GUTTER CORNER ASSEMBLY
ALL SYSTEMS

FLA

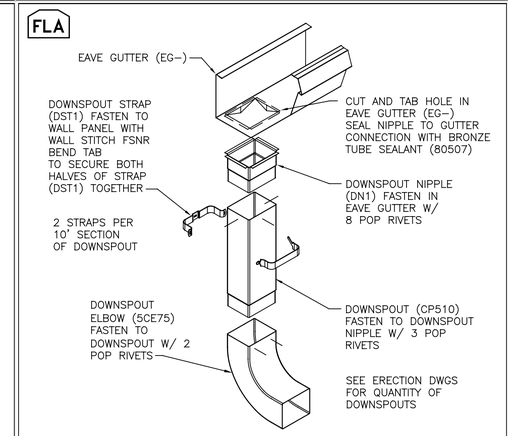

REV. DATE:06/26/19 | REV. NO. 04
RC38P1 — DOWNSPOUT ASSEMBLY
ALL SYSTEMS

FLA

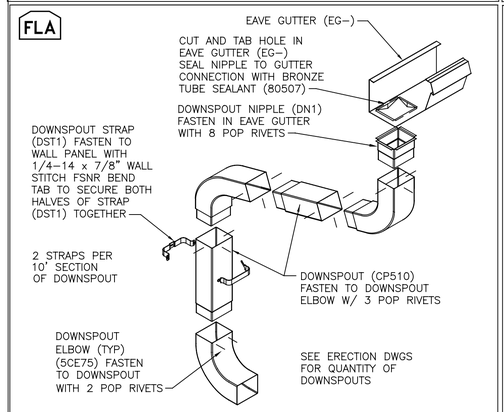

REV. DATE: 06/26/19 | REV. NO. 04
RC38R1 — DOWNSPOUT ASSEMBLY
ALL SYSTEMS (WITH CANOPY)

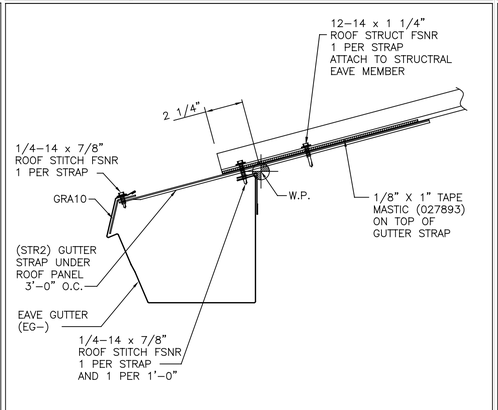

REV. DATE: 09/18/19 | REV. NO. 04
RC39A3 — PANEL RIB GUTTER
STRAP ATTACHMENT (WITH ICE DAMMING)

FLA

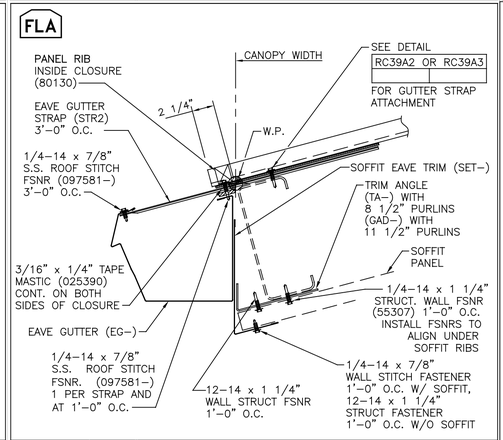

REV. DATE: 09/18/19 | REV. NO. 02
RCV010 — PANEL RIB ROOF W/ EAVE GUTTER
AT CANOPY

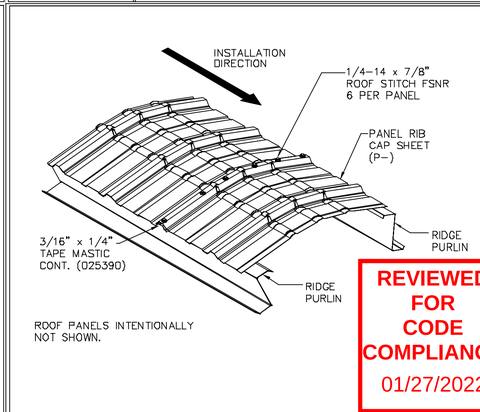

REVIEWED FOR CODE COMPLIANCE
01/27/2022

REV. DATE:09/25/14 | REV. NO. 00
RCV308 — PANEL RIB ROOF
RIDGE CAP SIDELAP (>2:12 THRU 4:12)

COLORADO LICENSED
MANUEL M. WEBER
0052792
PROFESSIONAL ENGINEER

09/10/2021

PERMIT SET- For Building Dept. Approval

THE VP ENGINEER'S SEAL APPLIES ONLY TO THE WORK PRODUCT OF VP AND DESIGN AND PERFORMANCE REQUIREMENTS SPECIFIED BY VP. THE VP ENGINEER'S SEAL DOES NOT APPLY TO THE PERFORMANCE OR DESIGN OF ANY OTHER PRODUCT OR COMPONENT FURNISHED BY VP EXCEPT TO ANY DESIGN OR PERFORMANCE REQUIREMENTS SPECIFIED BY VP.

THIS DRAWING, INCLUDING THE INFORMATION HEREON, REMAINS THE PROPERTY OF VP BUILDINGS. IT IS PROVIDED SOLELY FOR ERECTING THE BUILDING DESCRIBED IN THE APPLICABLE PURCHASE ORDER AND MAY BE REPRODUCED ONLY FOR THAT PURPOSE. IT SHALL NOT BE MODIFIED, REPRODUCED OR USED FOR ANY OTHER PURPOSE WITHOUT PRIOR WRITTEN APPROVAL OF VP BUILDINGS.

THE GENERAL CONTRACTOR AND/OR ERECTOR IS SOLELY RESPONSIBLE FOR ACCURATE GOOD QUALITY WORKMANSHIP IN ERECTING THIS BUILDING IN ACCORDANCE WITH THIS DRAWING, DETAILS REFERENCED IN THIS DRAWING, ALL APPLICABLE VP BUILDINGS ERECTION GUIDES, AND INDUSTRY STANDARDS PERTAINING TO PROPER ERECTION, INCLUDING THE CORRECT USE OF TEMPORARY BRACING.

D

VP Buildings
3200 Players Club Circle Memphis TN 38125

REV	DATE	BY	DESCRIPTION

NTS

9/8/2021 SEDSheet 12:33:01

COVERING & TRIM SED'S

BUILDER	Rule Steel
CUSTOMER	
LOCATION	Clark, Colorado
PROJECT	DC Riding Arena
BUILDERS PO#	
FILENAME:	DC Riding Arena Option 2

VP BUILDINGS
VARCO PRUDEN
A BlueScope Steel Company
VPC VERSION: 2021.2a

a division of BlueScope Buildings North America, Inc.

JOBNO	21-007748-01
DATE	09/08/2021
DRAWN/CHECK	SDA SDA
PAGE	36

PR WALL PANEL MARK NO.: W F F I I E G G O C C C
LENGTH CODE
PR ROOF PANEL MARK NO.: R F F I I E G G O C C C
LENGTH CODE
PR RIDGE PANEL MARK NO.: P F F I I E G G O C C C
LENGTH CODE

F = FEET
I = INCHES
E = EIGHTHS
G = GAGE
O = OPERATION
C = FIN/COLOR

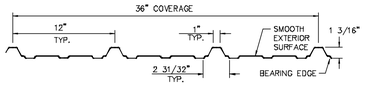

PANEL RIB ROOF AND WALL PANEL (PR)

RPR WALL PANEL MARK NO.: R R F F I I E G G O C C C
LENGTH CODE

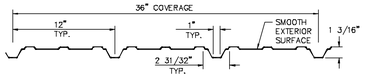

RPR WALL PANEL

REV. DATE:11/17/17 REV. NO. 01
EN52A1 — PR ROOF & PR/RPR WALL PANELS

PANEL ERECTION GUIDE REQUIRED FOR THIS PROJECT:

REFER TO:

VARCO PRUDEN BUILDINGS

BASIC PANELS & ACCESSORIES

The field guide for correct Installation of Varco Pruden's Wall and Roof Systems, Tuff-Lites, Wallites, Doors, Windows, Gutters and Trim.

BACK COVER: 4003 BASIC PANELS AND ACCESSORIES

REV. DATE:01/30/14 REV. NO. 00
ENV003 — BASIC PANEL AND ACCESSORIES
CONTAINS: PR ROOF – WALLS: PR, RPR, VR

FLA

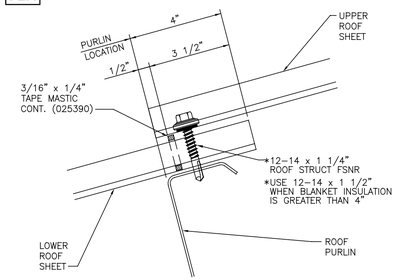

DETAILS QUALIFY FOR AIR INFILTRATION/WATER PENETRATION RATED ASSEMBLIES.

REV. DATE:06/26/19 REV. NO. 04
RC02B1 — PANEL RIB ROOF–STANDARD
PANEL ENDLAP

FLA

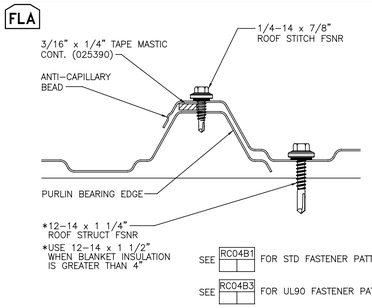

SEE RC04B1 FOR STD FASTENER PATTERN
SEE RC04B3 FOR UL90 FASTENER PATTERN
SEE RC04B2 FOR ICE DAMMING FASTENER PATTERN
SEE RC04B4 FOR UL90/ICE DAMMING FASTENER PATTERN

DETAILS QUALIFY FOR AIR INFILTRATION/WATER PENETRATION RATED ASSEMBLIES.

REV. DATE:06/26/19 REV. NO. 05
RC03B1 — PANEL RIB ROOF–STANDARD
PANEL SIDELAP

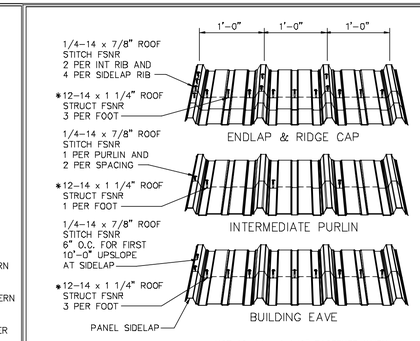

*USE 12-14 x 1 1/2" FASTENER WHEN BLANKET INSULATION THICKNESS IS GREATER THAN 4"

REV. DATE:11/13/13 REV. NO. 01
RC04B2 — FASTENER PATTERNS
ICE DAMMING

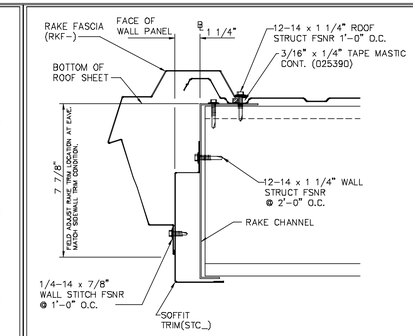

REV. DATE:10/22/12 REV. NO. 01
RC30LC — PANEL RIB ROOF RAKE TRIM
CANOPY RAKE PR,VR OR RPR PARTIAL WALL

FLA

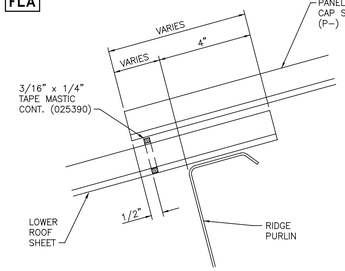

NOTE: SUBSTITUTE 1/8" X 1" TAPE MASTIC (027893) FOR MIAMI-DADE AND BROWARD COUNTY,FL REQUIREMENTS (NOA NO. 14-0123.12)

REV. DATE:06/26/19 REV. NO. 04
RC34B1 — PANEL RIB ROOF
RIDGE CAP ENDLAP

FLA

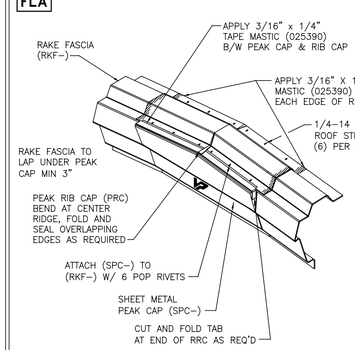

REV. DATE:06/26/19 REV. NO. 03
RC38C4 — METAL PEAK CAP
TO RAKE FASCIA ATTACHMENT (P–RIB ROOF – ONLY)

FLA

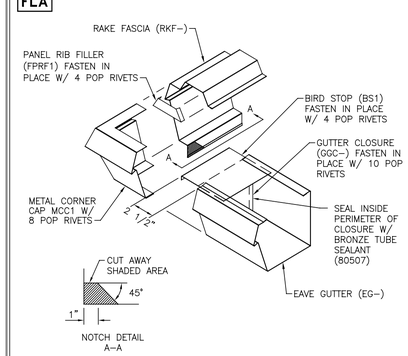

REV. DATE:06/26/19 REV. NO. 04
RC38N1 — EAVE GUTTER CORNER ASSEMBLY
ALL SYSTEMS

FLA

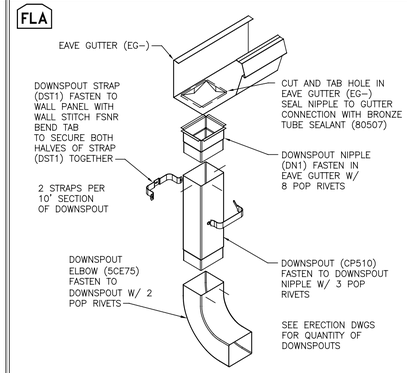

REV. DATE:06/26/19 REV. NO. 04
RC38P1 — DOWNSPOUT ASSEMBLY
ALL SYSTEMS

FLA

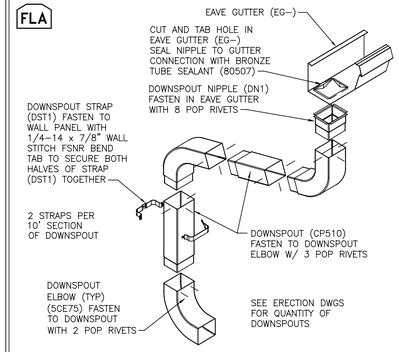

REV. DATE:06/26/19 REV. NO. 04
RC38R1 — DOWNSPOUT ASSEMBLY
ALL SYSTEMS (WITH CANOPY)

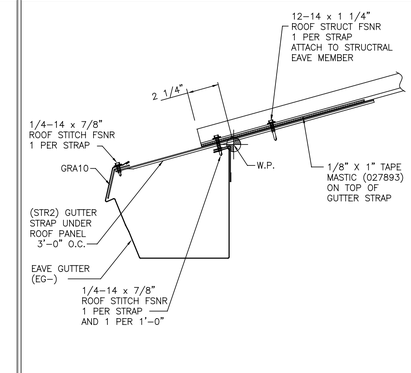

REV. DATE:09/18/19 REV. NO. 04
RC39A3 — PANEL RIB GUTTER
STRAP ATTACHMENT (WITH ICE DAMMING)

FLA

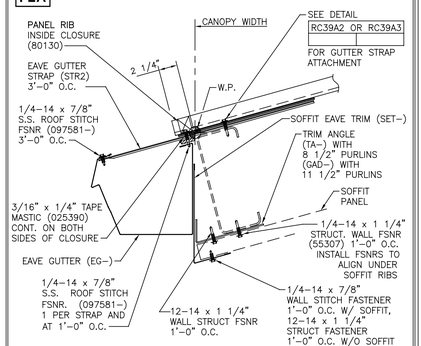

REV. DATE:09/18/19 REV. NO. 02
RCV010 — PANEL RIB ROOF W/ EAVE GUTTER
AT CANOPY

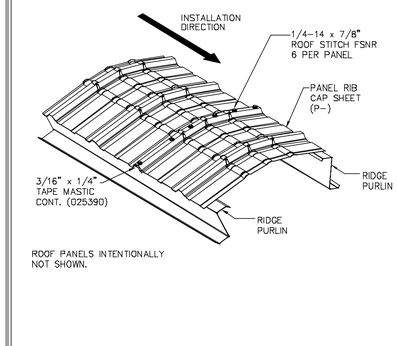

REV. DATE:09/25/14 REV. NO. 00
RCV308 — PANEL RIB ROOF
RIDGE CAP SIDELAP (>2:12 THRU 4:12)

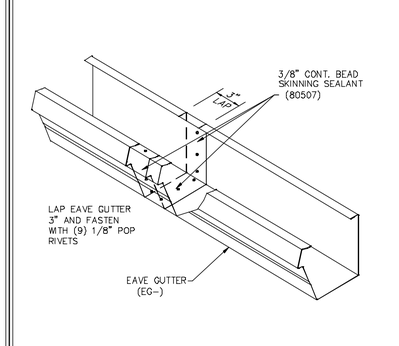

REV. DATE:03/03/15 REV. NO. 00
RCV324 — TRIM SPLICES
EAVE GUTTER SPLICE

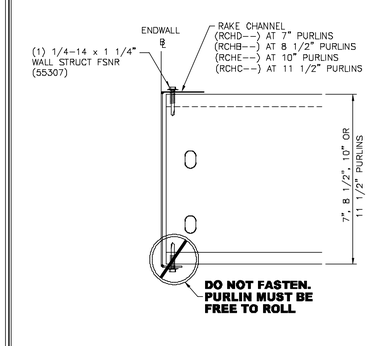

REV. DATE:07/01/09 REV. NO. 00
RS10R1 — PR ROOF RAKE CHANNEL TO PURLIN
ALL PURLIN DEPTHS (ALL WALL PANEL)

FLA

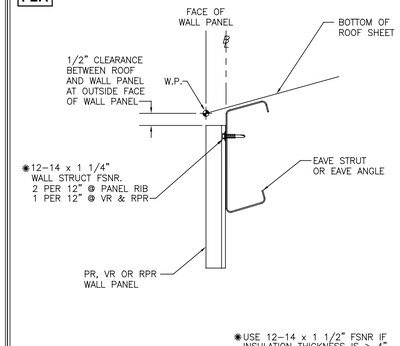

*USE 12-14 x 1 1/2" FSNR IF INSULATION THICKNESS IS > 4"

REV. DATE:06/26/19 REV. NO. 04
WC11F1 — PR, VR & RPR WALL AT EAVE
STANDARD WALL PANEL

FLA

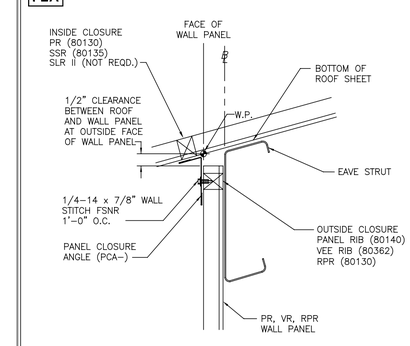

REV. DATE:06/26/19 REV. NO. 06
WC11F4 — WALL AT CANOPY ROOF
ALL WALL – ALL ROOFS

COLORADO LICENSED
EMMANUEL M. WIBNEH
0052792
PROFESSIONAL ENGINEER

09/10/2021

REVIEWED FOR CODE COMPLIANCE
01/27/2022

PERMIT SET- For Building Dept. Approval

THE VP ENGINEER'S SEAL APPLIES ONLY TO THE WORK PRODUCT OF VP AND DESIGN AND PERFORMANCE REQUIREMENTS SPECIFIED BY VP. THE VP ENGINEER'S SEAL DOES NOT APPLY TO THE PERFORMANCE OR DESIGN OF ANY OTHER PRODUCT OR COMPONENT FURNISHED BY VP EXCEPT TO ANY DESIGN OR PERFORMANCE REQUIREMENTS SPECIFIED BY VP.

THIS DRAWING, INCLUDING THE INFORMATION HEREON, REMAINS THE PROPERTY OF VP BUILDINGS. IT IS PROVIDED SOLELY FOR ERECTING THE BUILDING DESCRIBED IN THE APPLICABLE PURCHASE ORDER AND MAY BE REPRODUCED ONLY FOR THAT PURPOSE. IT SHALL NOT BE MODIFIED, REPRODUCED OR USED FOR ANY OTHER PURPOSE WITHOUT PRIOR WRITTEN APPROVAL OF VP BUILDINGS.

THE GENERAL CONTRACTOR AND/OR ERECTOR IS SOLELY RESPONSIBLE FOR ACCURATE GOOD QUALITY WORKMANSHIP IN ERECTING THIS BUILDING IN ACCORDANCE WITH THIS DRAWING, DETAILS REFERENCED IN THIS DRAWING, ALL APPLICABLE VP BUILDINGS ERECTION GUIDES, AND INDUSTRY STANDARDS PERTAINING TO PROPER ERECTION, INCLUDING THE CORRECT USE OF TEMPORARY BRACING.

D

VP Buildings
3200 Players Club Circle Memphis TN 38125

REV	DATE	BY	DESCRIPTION

NTS

9/8/2021 SEDSheet 13:03:11

COVERING & TRIM SED'S

BUILDER	Rule Steel
CUSTOMER	
LOCATION	Clark, Colorado
PROJECT	DC Riding Arena
BUILDERS PO#	
FILENAME:	DC Riding Arena Option 2

VP BUILDINGS
VARCO PRUDEN
A BlueScope Steel Company
VPC VERSION: 2021.2a

JOBNO	21-007748-01
DATE	09/08/2021
DRAWN/CHECK	SDA SDA
PAGE	37

a division of BlueScope Buildings North America, Inc.

PR WALL PANEL MARK NO.: W F F I I E G G O C C C
LENGTH CODE
PR ROOF PANEL MARK NO.: R F F I I E G G O C C C
LENGTH CODE
PR RIDGE PANEL MARK NO.: P F F I I E G G O C C C
LENGTH CODE

F = FEET
I = INCHES
E = EIGHTHS
G = GAGE
O = OPERATION
C = FIN/COLOR

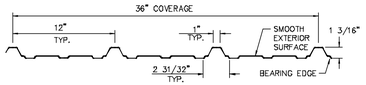

PANEL RIB ROOF AND WALL PANEL (PR)

RPR WALL PANEL MARK NO.: R R F F I I E G G O C C C
LENGTH CODE

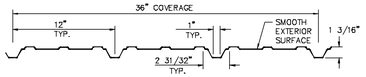

RPR WALL PANEL

REV. DATE:11/17/17 REV. NO. 01
EN52A1 — PR ROOF & PR/RPR WALL PANELS

PANEL ERECTION GUIDE REQUIRED FOR THIS PROJECT:

REFER TO:

VARCO PRUDEN BUILDINGS

BASIC PANELS & ACCESSORIES

The field guide for correct Installation of Varco Pruden's Wall and Roof Systems, Tuff-Lites, Wallites, Doors, Windows, Gutters and Trim.

BACK COVER: 4003 BASIC PANELS AND ACCESSORIES

REV. DATE:01/30/14 REV. NO. 00
ENV003 — BASIC PANEL AND ACCESSORIES
CONTAINS: PR ROOF – WALLS: PR, RPR, VR

FLA

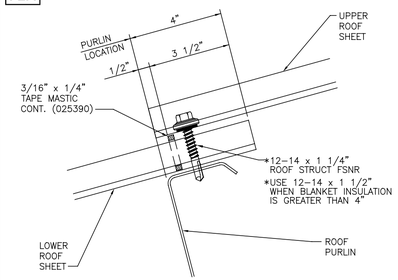

DETAILS QUALIFY FOR AIR INFILTRATION/WATER PENETRATION RATED ASSEMBLIES.

REV. DATE:06/26/19 REV. NO. 04
RC02B1 — PANEL RIB ROOF–STANDARD
PANEL ENDLAP

FLA

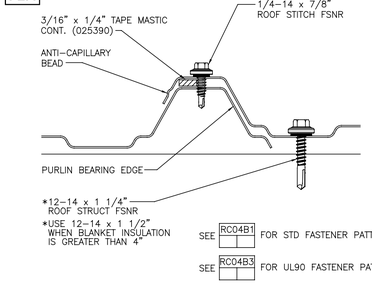

SEE RC04B1 FOR STD FASTENER PATTERN
SEE RC04B3 FOR UL90 FASTENER PATTERN
SEE RC04B2 FOR ICE DAMMING FASTENER PATTERN
SEE RC04B4 FOR UL90/ICE DAMMING FASTENER PATTERN

DETAILS QUALIFY FOR AIR INFILTRATION/WATER PENETRATION RATED ASSEMBLIES.

REV. DATE:06/26/19 REV. NO. 05
RC03B1 — PANEL RIB ROOF–STANDARD
PANEL SIDELAP

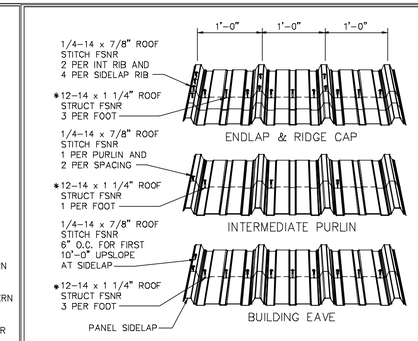

*USE 12-14 x 1 1/2" FASTENER WHEN BLANKET INSULATION THICKNESS IS GREATER THAN 4"

REV. DATE:11/13/13 REV. NO. 01
RC04B2 — FASTENER PATTERNS
ICE DAMMING

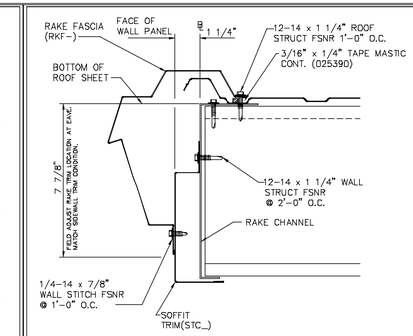

REV. DATE:10/22/12 REV. NO. 01
RC30LC — PANEL RIB ROOF RAKE TRIM
CANOPY RAKE PR,VR OR RPR PARTIAL WALL

FLA

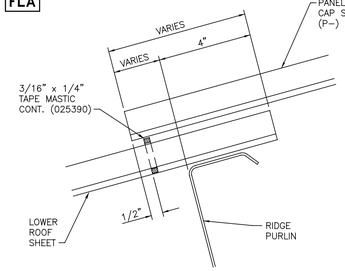

NOTE: SUBSTITUTE 1/8" X 1" TAPE MASTIC (027893) FOR MIAMI-DADE AND BROWARD COUNTY,FL REQUIREMENTS (NOA NO. 14-0123.12)

REV. DATE:06/26/19 REV. NO. 04
RC34B1 — PANEL RIB ROOF
RIDGE CAP ENDLAP

FLA

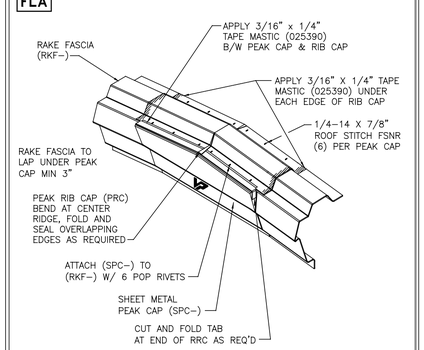

REV. DATE:06/26/19 REV. NO. 03
RC38C4 — METAL PEAK CAP
TO RAKE FASCIA ATTACHMENT (P–RIB ROOF – ONLY)

FLA

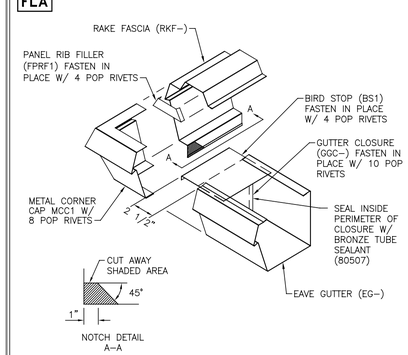

REV. DATE:06/26/19 REV. NO. 04
RC38N1 — EAVE GUTTER CORNER ASSEMBLY
ALL SYSTEMS

FLA

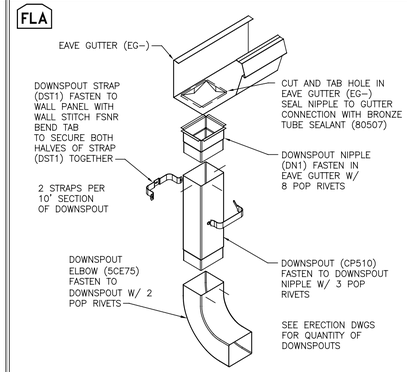

REV. DATE:06/26/19 REV. NO. 04
RC38P1 — DOWNSPOUT ASSEMBLY
ALL SYSTEMS

FLA

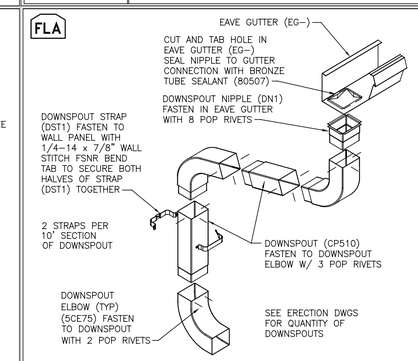

REV. DATE:06/26/19 REV. NO. 04
RC38R1 — DOWNSPOUT ASSEMBLY
ALL SYSTEMS (WITH CANOPY)

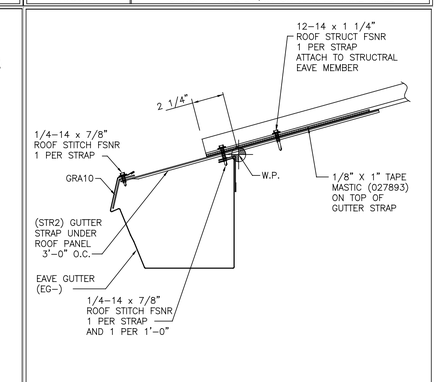

REV. DATE:09/18/19 REV. NO. 04
RC39A3 — PANEL RIB GUTTER
STRAP ATTACHMENT (WITH ICE DAMMING)

FLA

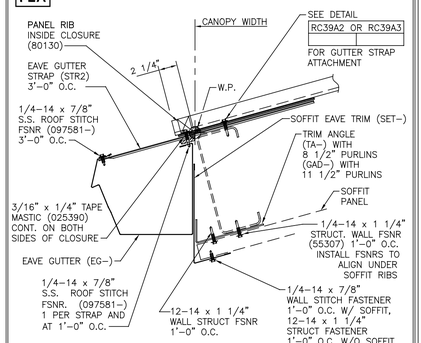

REV. DATE:09/18/19 REV. NO. 02
RCV010 — PANEL RIB ROOF W/ EAVE GUTTER
AT CANOPY

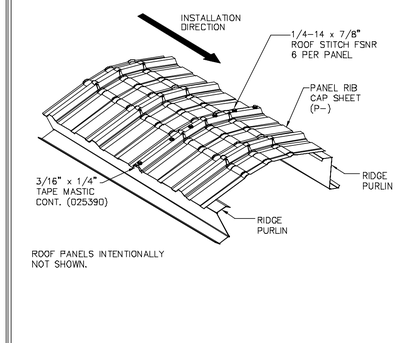

REV. DATE:09/25/14 REV. NO. 00
RCV308 — PANEL RIB ROOF
RIDGE CAP SIDELAP (>2:12 THRU 4:12)

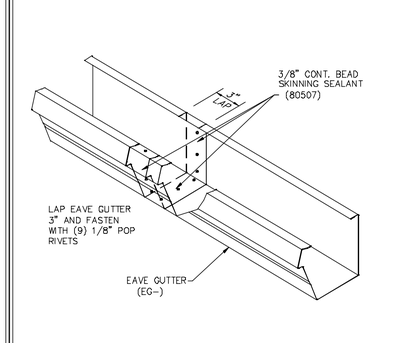

REV. DATE:03/03/15 REV. NO. 00
RCV324 — TRIM SPLICES
EAVE GUTTER SPLICE

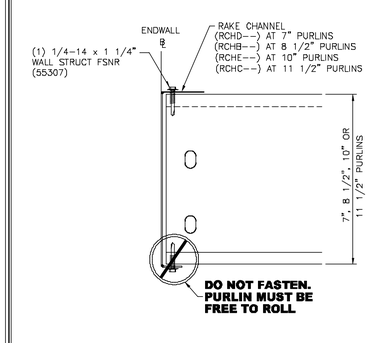

REV. DATE:07/01/09 REV. NO. 00
RS10R1 — PR ROOF RAKE CHANNEL TO PURLIN
ALL PURLIN DEPTHS (ALL WALL PANEL)

FLA

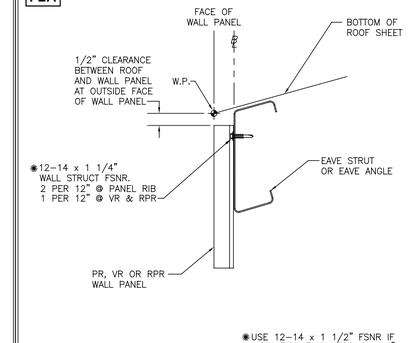

*USE 12-14 x 1 1/2" FSNR IF INSULATION THICKNESS IS > 4"

REV. DATE:06/26/19 REV. NO. 04
WC11F1 — PR, VR & RPR WALL AT EAVE
STANDARD WALL PANEL

FLA

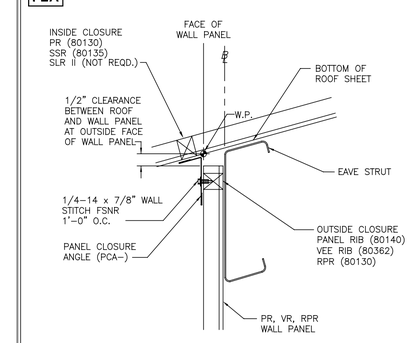

REV. DATE:06/26/19 REV. NO. 06
WC11F4 — WALL AT CANOPY ROOF
ALL WALL – ALL ROOFS

REVIEWED FOR CODE COMPLIANCE 01/27/2022

09/10/2021 **PERMIT SET- For Building Dept. Approval**

THE VP ENGINEER'S SEAL APPLIES ONLY TO THE WORK PRODUCT OF VP AND DESIGN AND PERFORMANCE REQUIREMENTS SPECIFIED BY VP. THE VP ENGINEER'S SEAL DOES NOT APPLY TO THE PERFORMANCE OR DESIGN OF ANY OTHER PRODUCT OR COMPONENT FURNISHED BY VP EXCEPT TO ANY DESIGN OR PERFORMANCE REQUIREMENTS SPECIFIED BY VP.

THIS DRAWING, INCLUDING THE INFORMATION HEREON, REMAINS THE PROPERTY OF VP BUILDINGS. IT IS PROVIDED SOLELY FOR ERECTING THE BUILDING DESCRIBED IN THE APPLICABLE PURCHASE ORDER AND MAY BE REPRODUCED ONLY FOR THAT PURPOSE. IT SHALL NOT BE MODIFIED, REPRODUCED OR USED FOR ANY OTHER PURPOSE WITHOUT PRIOR WRITTEN APPROVAL OF VP BUILDINGS.

THE GENERAL CONTRACTOR AND/OR ERECTOR IS SOLELY RESPONSIBLE FOR ACCURATE GOOD QUALITY WORKMANSHIP IN ERECTING THIS BUILDING IN ACCORDANCE WITH THIS DRAWING, DETAILS REFERENCED IN THIS DRAWING, ALL APPLICABLE VP BUILDINGS ERECTION GUIDES, AND INDUSTRY STANDARDS PERTAINING TO PROPER ERECTION, INCLUDING THE CORRECT USE OF TEMPORARY BRACING.

D

VP Buildings
3200 Players Club Circle Memphis TN 38125

REV	DATE	BY	DESCRIPTION

NTS

9/8/2021 SEDSheet 13:03:17

COVERING & TRIM SED'S

BUILDER	Rule Steel
CUSTOMER	
LOCATION	Clark, Colorado
PROJECT	DC Riding Arena
BUILDERS PO#	
FILENAME:	DC Riding Arena Option 2

VP BUILDINGS
VARCO PRUDEN
A BlueScope Steel Company
VPC VERSION: 2021.2a

JOBNO	21-007748-01
DATE	09/08/2021
DRAWN/CHECK	SDA SDA
PAGE	38

a division of BlueScope Buildings North America, Inc.

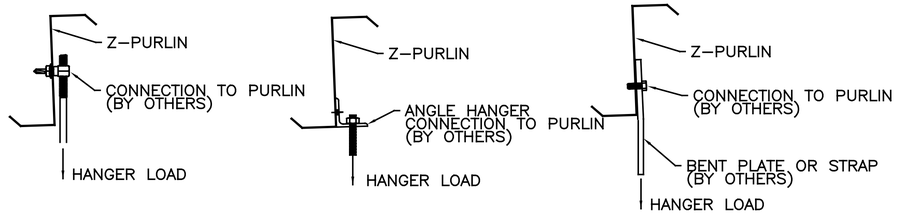

WEB HANGERS

FOR 1/2" DIAM. BOLT TO PURLIN CONNECTION-- MAX HANGER LOAD=1500lbs
PURLIN MUST BE SPECIFICALLY DESIGNED FOR LOADS GREATER THAN 500 LB. SEE NOTE: 2.

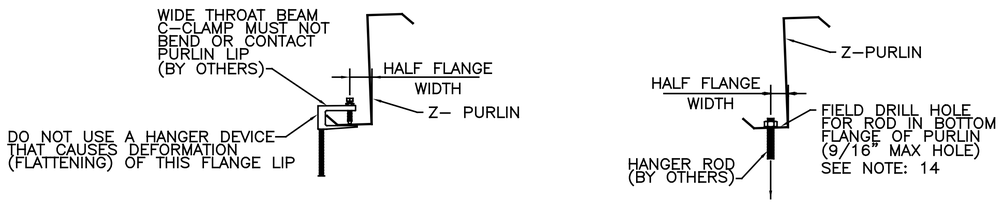

VERIFY OVERALL PURLIN DESIGN CAN TAKE APPLIED LOADS. SEE NOTE: 2

MAXIMUM LOAD SUSPENDED FROM BOTTOM FLANGE (LOCATED AT HALF–FLANGE WIDTH)			
THICKNESS	MAX LOAD	THICKNESS	MAX LOAD
0.060"	110lbs	0.088"	200lbs
0.068"	120lbs	0.098"	250lbs
0.073"	140lbs		
0.079"	180lbs	0.113"	250lbs

FOR LOADS LOCATED MORE THAN HALF FLANGE WIDTH FROM WEB, USE HALF OF THE LOADS SHOWN ABOVE.

BOTTOM FLANGE CLAMP HANGER
(TOP FLANGE SIMILAR)

BOTTOM FLANGE ROD HANGER
(TOP FLANGE SIMILAR)

DO NOT USE ANY OF THE DETAILS ABOVE IF ROOF SLOPE IS GREATER THAN 4:12

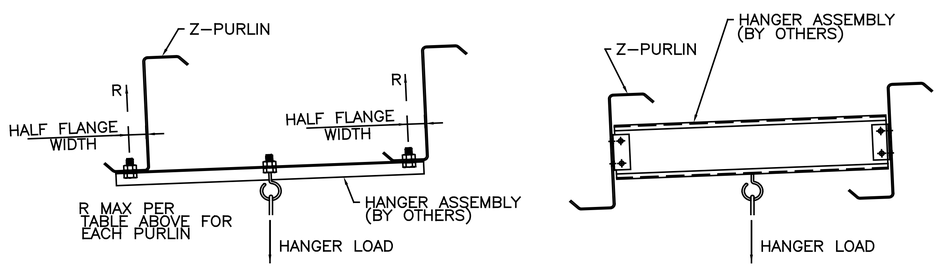

DOUBLE PURLIN HANGERS

VERIFY OVERALL PURLIN DESIGN CAN SUPPORT APPLIED LOADS.

GENERAL NOTES

1. CONCENTRATED LOADS GREATER THAN 500lbs ON ANY SINGLE PURLIN MUST BE EXPLICITLY LOCATED AND DESIGNED FOR DURING DESIGN OF BUILDING SYSTEM.
2. SPECIFIED COLLATERAL LOADS MAY BE CONVERTED TO SAFE CONCENTRATED LOADS AS FOLLOWS, WHERE P = MAX CONCENTRATED LOAD(lbs); W = UNIFORM COLLATERAL LOAD (PSF) x PURLIN SPACING (ft) = lbs/ft; L = PURLIN SPAN (ft). HANGERS SHOULD BE SPACED APPROX. EQUAL.

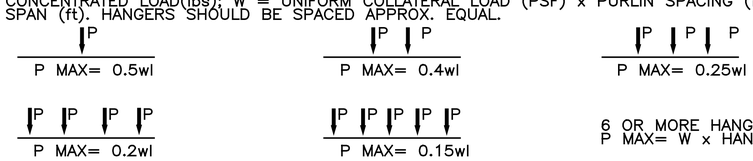

EXAMPLE: A PIPE IS SUSPENDED FROM A PURLIN AT 3 LOCATIONS EQUALLY SPACED
BAY SPACING = 24'–0" PURLIN SPACING = 5'–0"
SPECIFIED COLLATERAL LOAD = 5 PSF
W = 5 PSF x 5' = 25 PLF L = 24'–0"
PMAX = 0.25 x 25 PLF x 24'–0" = 150 LBS AT EACH LOCATION
THE PURLIN CAN SUPPORT 3 LOADS UP TO 150 LBS EACH. PICK A HANGER CONNECTION CAPABLE OF SUPPORTING ACTUAL APPLIED LOADS.

3. FOR LOADS GREATER THAN 250 lbs, PURLINS MUST BE "BLOCKED" AT LOCATION OF LOAD TO PREVENT PURLIN ROTATION.
4. EQUIPMENT LOADS SHOULD BE OBTAINED FROM CERTIFIED EQUIPMENT DRAWINGS AND MANUFACTURER'S DATA.
5. Z–PURLINS WILL DEFLECT UNDER SNOW AND WIND LOADS. ITEMS THAT MAY BE DAMAGED DUE TO DEFLECTIONS, (EX. GAS LINES), VERIFY THAT PIPES OR SUSPENDED EQUIPMENT ARE COMPATIBLE WITH EXPECTED DEFLECTION RANGES (±L/180).
6. THE NATIONAL FIRE PROTECTION ASSOCIATION (NFPA) REQUIRES SPRINKLER HANGERS TO BE DESIGNED FOR A MINIMUM LOAD OF FIVE TIMES THE WEIGHT OF THE WATER–FILLED PIPE PLUS 250 POUNDS. THE HANGER ITSELF MUST BE ABLE TO SUPPORT THIS LOADING, IT IS NOT NECESSARY TO DESIGN THE SUPPORTING MEMBER FOR THIS LOAD IN COMBINATION WITH THE DESIGN LOADS.
7. SUSPENDED LOADS WILL NEED TO BE BRACED (TO THE PRIMARY FORCE RESISTING SYSTEM) FOR LATERAL STABILITY DUE TO EARTHQUAKES.
8. HANGER DESIGN IS NOT THE RESPONSIBILITY OF BLUESCOPE.
9. TOP FLANGE HANGERS SHOULD BE AVOIDED ON BUILDINGS WITHOUT INSULATION SPACER BLOCKS ON TOP OF THE TOP FLANGE. IF TOP FLANGE HANGERS ARE REQUIRED, PLACE THE HANGERS AT THE ROOF PANEL MAJOR CORRUGATION LOCATION TO AVOID DAMAGING THE ROOF PANEL WITH THE HANGER WHEN THE ROOF PANEL IS LOADED OR WALKED ON.
10. WHEN BEAM C–CLAMPS OR OTHER ROD HANGERS ARE USED ON THE TOP FLANGE, THE ROD SHOULD NOT EXTEND ABOVE THE TOP OF THE CLAMP TO AVOID DAMAGING THE ROOF PANEL WITH THE ROD WHEN THE ROOF PANEL IS LOADED OR WALKED ON.
11. DO NOT HANG ANY TYPE OF CRANE, HOIST, CONVEYOR OR ANY MOVING LOADS FROM THE Z–PURLINS.
12. DO NOT HANG ANY LOAD FROM BBNA SUPPLIED PURLIN BRACES OR BRIDGING.
13. DO NOT WELD ANY PART OF THE Z–PURLIN.
14. HOLES MUST NOT EXCEED 9/16" DIAMETER UNLESS AUTHORIZED BY BBNA ENGINEER. DRILL OR REAM HOLES WHEN REQUIRED– DO NOT FLAME CUT

COLORADO LICENSED
AMMUEL M. WUNCH
0052792
PROFESSIONAL ENGINEER

09/10/2021

REVIEWED FOR CODE COMPLIANCE
01/27/2022

CONCENTRATED LOADS ON ROOF Z–PURLIN HANGER DETAILS				
DRAWN BY	CHECKED BY	GROUP NUMBER: 80–054–01		
REVERITT	RBENTON	B	B–081465	09
FIRST RELEASE DATE	REVISION DATE			
02/26/10	02/26/20			

PERMIT SET- For Building Dept. Approval

THE VP ENGINEER'S SEAL APPLIES ONLY TO THE WORK PRODUCT OF VP AND DESIGN AND PERFORMANCE REQUIREMENTS SPECIFIED BY VP. THE VP ENGINEER'S SEAL DOES NOT APPLY TO THE PERFORMANCE OR DESIGN OF ANY OTHER PRODUCT OR COMPONENT FURNISHED BY VP EXCEPT TO ANY DESIGN OR PERFORMANCE REQUIREMENTS SPECIFIED BY VP.

THIS DRAWING, INCLUDING THE INFORMATION HEREON, REMAINS THE PROPERTY OF VP BUILDINGS. IT IS PROVIDED SOLELY FOR ERECTING THE BUILDING DESCRIBED IN THE APPLICABLE PURCHASE ORDER AND MAY BE REPRODUCED ONLY FOR THAT PURPOSE. IT SHALL NOT BE MODIFIED, REPRODUCED OR USED FOR ANY OTHER PURPOSE WITHOUT PRIOR WRITTEN APPROVAL OF VP BUILDINGS.

THE GENERAL CONTRACTOR AND/OR ERECTOR IS SOLELY RESPONSIBLE FOR ACCURATE GOOD QUALITY WORKMANSHIP IN ERECTING THIS BUILDING IN ACCORDANCE WITH THIS DRAWING, DETAILS REFERENCED IN THIS DRAWING, ALL APPLICABLE VP BUILDINGS ERECTION GUIDES, AND INDUSTRY STANDARDS PERTAINING TO PROPER ERECTION, INCLUDING THE CORRECT USE OF TEMPORARY BRACING.

D

VP Buildings
3200 Players Club Circle Memphis TN 38125

REV	DATE	BY	DESCRIPTION

NTS

9/8/2021 SEDSheet 13:08:59

B-081465

BUILDER	Rule Steel
CUSTOMER	
LOCATION	Clark, Colorado
PROJECT	DC Riding Arena
BUILDERS PO#	
FILENAME:	DC Riding Arena Option 2

VP BUILDINGS
VARCO PRUDEN
A BlueScope Steel Company
VPC VERSION: 2021.2a

JOBNO	21-007748-01
DATE	09/08/2021
DRAWN/CHECK	SDA SDA
PAGE	39

a division of BlueScope Buildings North America, Inc.

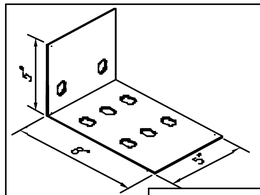

ANTI-ROLL CLIP — ARC1

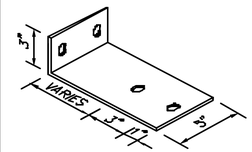

DOOR JAMB CLIP (OUTSET) — DJC1_

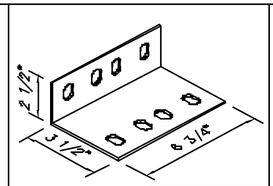

DOOR JAMB CLIP (INSET) — DJC2_

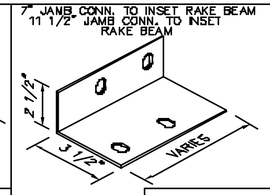

DOOR JAMB CLIP (INSET) — DJC4L_

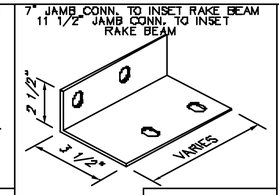

DOOR JAMB CLIP (INSET) — DJC4R_

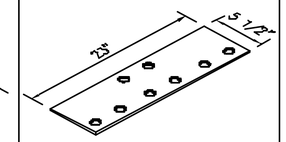

EAVE ATTACHMENT PLATE — EAP1

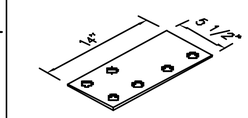

ENDFRAME EAVE ATTACHMENT PLATE — EAP2

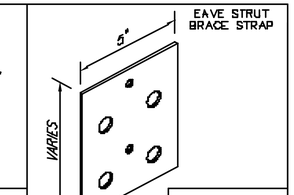

ESBS_

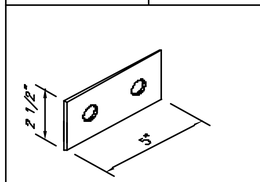

EAVE STRUT SHIM PLATE — ESH–

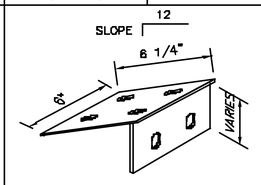

BOLTED FULL FRAME CLIP — FFC_

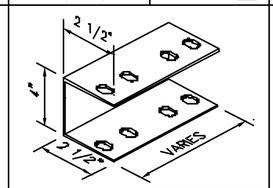

GIRT CLIP TO RAFTER — GC18_

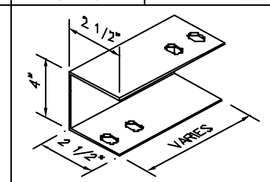

INSET GIRT CLIP TO RAFTER LEFT / RIGHT — GC19 L/R

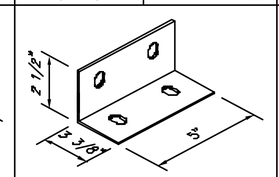

GIRT / JAMB CLIP — GC5

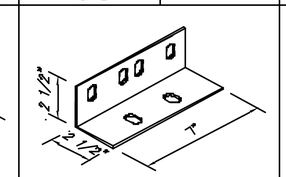

INSET GIRT TO GAGE COLUMN FLG. CLIP — GC53

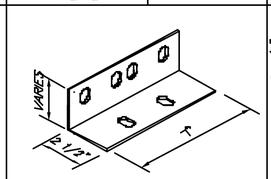

VARIABLE LEG CLIP 8.5 GIRTS — GC71_

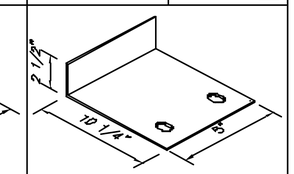

CORNER COLUMN TO RAKE CHANNEL CLIP — GC9

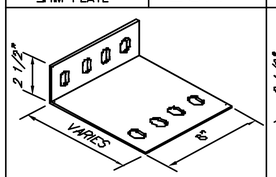

GIRT CLIP GAGE ENDWALL — GC91 A/B

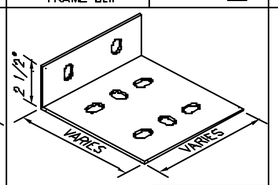

VARIABLE OUTSET GIRT CLIP — GCD

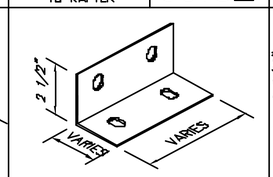

VARIABLE INSET GIRT CLIP — GCE

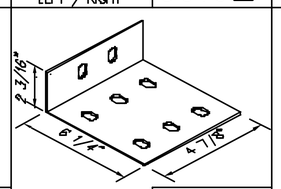

GAGE POST GIRT CLIP — GCW1

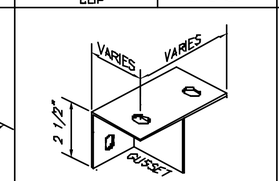

11.5 INSET GIRT CLIP — GCZZ

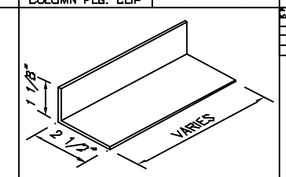

GIRT FILLER ANGLE — GFA

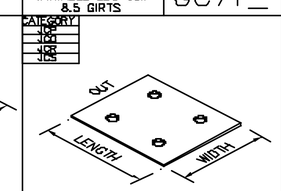

JAMB TO COLUMN MISC. PLATE — JC_

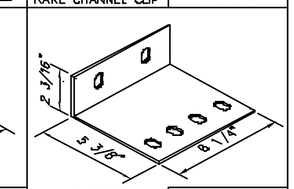

JAMB TO GIRT CLIP 8.5 – 8.5 — JTG1

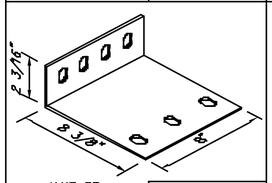

JAMB TO GIRT CLIP 11.5 –10 / 11.5 — JTG2

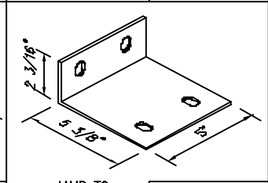

JAMB TO GIRT CLIP 7 – 7 — JTG3

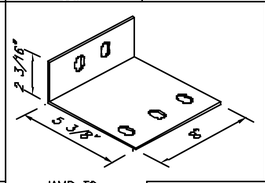

JAMB TO GIRT CLIP 10 – 10 — JTG4

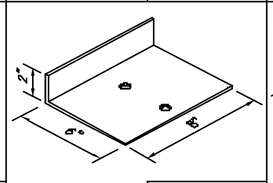

SIMPLE SAVER FB CLIP — KMA1

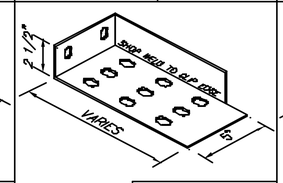

GUSSETED PURLIN GIRT CLIP — PC4/PC5

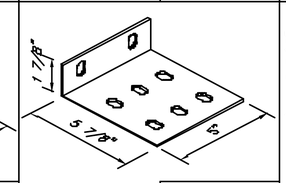

ANTI-ROLL PURLIN CLIP — PC27

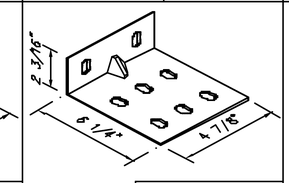

PURLIN / GIRT CLIP — PG1

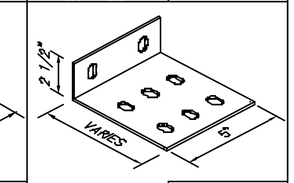

VARIABLE PURLIN GIRT CLIP — PGV_

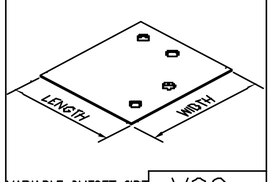

VARIABLE OUTSET GIRT CORNER CLIP — VCC_

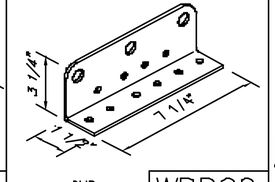

CLIP — WBBC2

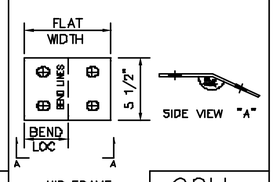

HIP FRAME CONNECTION CLIP — 02H_

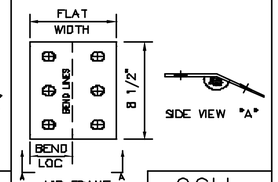

HIP FRAME CONNECTION CLIP — 06H_

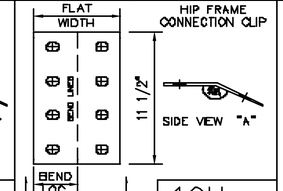

10H_

COLORADO LICENSED
AMANUEL M. WIRTH
0052792
PROFESSIONAL ENGINEER

09/10/2021

REVIEWED FOR CODE COMPLIANCE
01/27/2021

BENT CLIPS			
DRAWN BY NF	CHECKED BY RJR	GROUP NUMBER: – –	
FIRST RELEASE DATE 01/28/13	REVISION DATE 07/21/16	B	B–081765	04

PERMIT SET- For Building Dept. Approval

THE VP ENGINEER'S SEAL APPLIES ONLY TO THE WORK PRODUCT OF VP AND DESIGN AND PERFORMANCE REQUIREMENTS SPECIFIED BY VP. THE VP ENGINEER'S SEAL DOES NOT APPLY TO THE PERFORMANCE OR DESIGN OF ANY OTHER PRODUCT OR COMPONENT FURNISHED BY VP EXCEPT TO ANY DESIGN OR PERFORMANCE REQUIREMENTS SPECIFIED BY VP.

THIS DRAWING, INCLUDING THE INFORMATION HEREON, REMAINS THE PROPERTY OF VP BUILDINGS. IT IS PROVIDED SOLELY FOR ERECTING THE BUILDING DESCRIBED IN THE APPLICABLE PURCHASE ORDER AND MAY BE REPRODUCED ONLY FOR THAT PURPOSE. IT SHALL NOT BE MODIFIED, REPRODUCED OR USED FOR ANY OTHER PURPOSE WITHOUT PRIOR WRITTEN APPROVAL OF VP BUILDINGS.

THE GENERAL CONTRACTOR AND/OR ERECTOR IS SOLELY RESPONSIBLE FOR ACCURATE GOOD QUALITY WORKMANSHIP IN ERECTING THIS BUILDING IN ACCORDANCE WITH THIS DRAWING, DETAILS REFERENCED IN THIS DRAWING, ALL APPLICABLE VP BUILDINGS ERECTION GUIDES, AND INDUSTRY STANDARDS PERTAINING TO PROPER ERECTION, INCLUDING THE CORRECT USE OF TEMPORARY BRACING.

D

VP Buildings
3200 Players Club Circle Memphis TN 38125

REV	DATE	BY	DESCRIPTION

NTS

9/8/2021 SEDSheet 13:09:00

B-081765

BUILDER	Rule Steel
CUSTOMER	
LOCATION	Clark, Colorado
PROJECT	DC Riding Arena
BUILDERS PO#	
FILENAME:	DC Riding Arena Option 2

VP BUILDINGS
VARCO PRUDEN
A BlueScope Steel Company
VPC VERSION: 2021.2a

JOBNO	21-007748-01
DATE	09/08/2021
DRAWN/CHECK	SDA SDA
PAGE	40

a division of BlueScope Buildings North America, Inc.

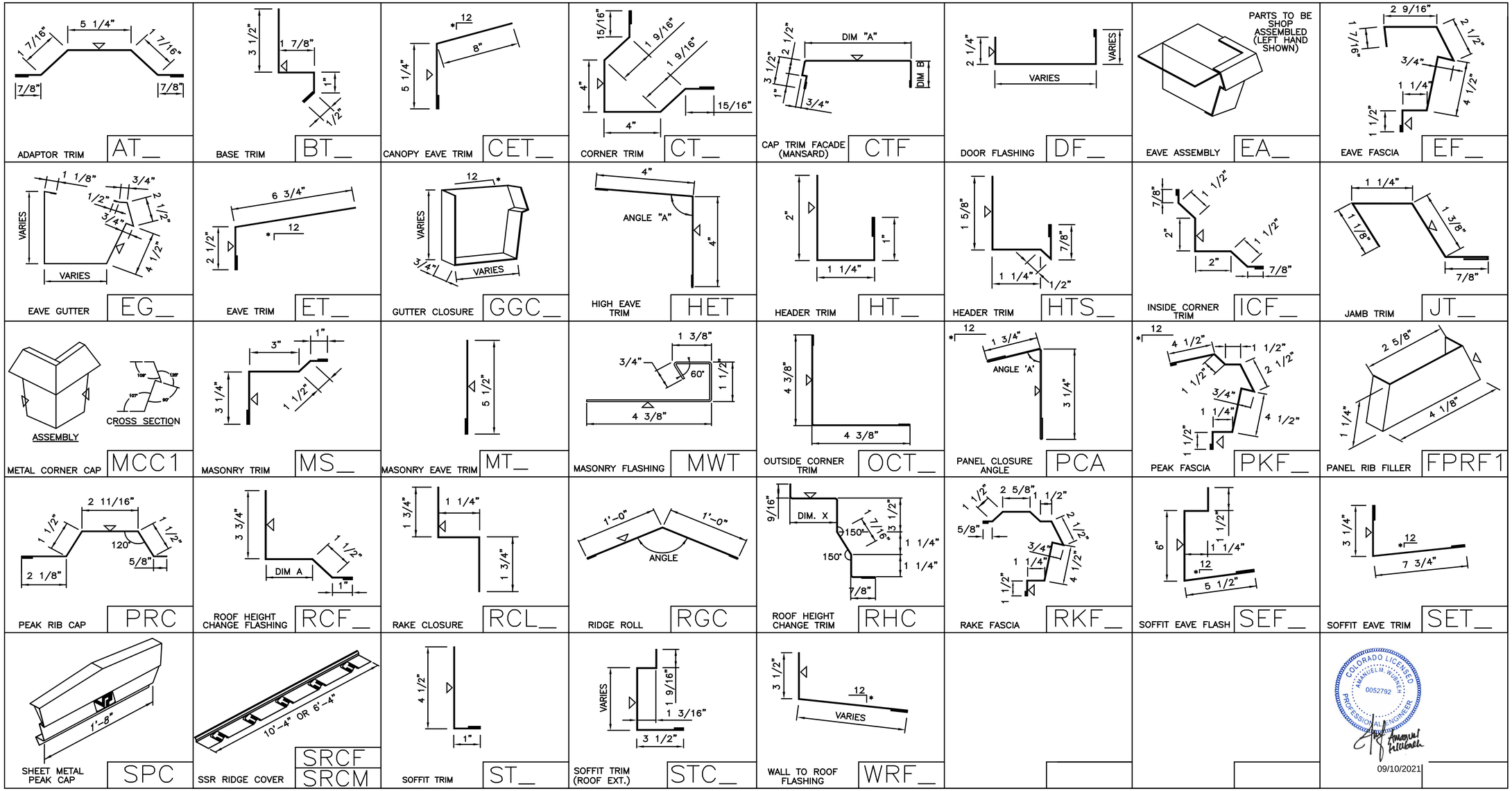

TRIM COLOR NOTE

△ DESIGNATES COLOR SIDE

REVIEWED FOR CODE COMPLIANCE 01/27/2022

STANDARD TRIMS				
DRAWN BY: NF	CHECKED BY: RJR	GROUP NUMBER: – –		
FIRST RELEASE DATE: 03/05/13	REVISION DATE: 12/05/18	B	S–081766	02

PERMIT SET- For Building Dept. Approval

THE VP ENGINEER'S SEAL APPLIES ONLY TO THE WORK PRODUCT OF VP AND DESIGN AND PERFORMANCE REQUIREMENTS SPECIFIED BY VP. THE VP ENGINEER'S SEAL DOES NOT APPLY TO THE PERFORMANCE OR DESIGN OF ANY OTHER PRODUCT OR COMPONENT FURNISHED BY VP EXCEPT TO ANY DESIGN OR PERFORMANCE REQUIREMENTS SPECIFIED BY VP.

THIS DRAWING, INCLUDING THE INFORMATION HEREON, REMAINS THE PROPERTY OF VP BUILDINGS. IT IS PROVIDED SOLELY FOR ERECTING THE BUILDING DESCRIBED IN THE APPLICABLE PURCHASE ORDER AND MAY BE REPRODUCED ONLY FOR THAT PURPOSE. IT SHALL NOT BE MODIFIED, REPRODUCED OR USED FOR ANY OTHER PURPOSE WITHOUT PRIOR WRITTEN APPROVAL OF VP BUILDINGS.

THE GENERAL CONTRACTOR AND/OR ERECTOR IS SOLELY RESPONSIBLE FOR ACCURATE GOOD QUALITY WORKMANSHIP IN ERECTING THIS BUILDING IN ACCORDANCE WITH THIS DRAWING, DETAILS REFERENCED IN THIS DRAWING, ALL APPLICABLE VP BUILDINGS ERECTION GUIDES, AND INDUSTRY STANDARDS PERTAINING TO PROPER ERECTION, INCLUDING THE CORRECT USE OF TEMPORARY BRACING.

D

VP Buildings
3200 Players Club Circle Memphis TN 38125

REV	DATE	BY	DESCRIPTION

NTS

9/8/2021 SEDSheet 13:09:02

S-081766

BUILDER: Rule Steel
CUSTOMER:
LOCATION: Clark, Colorado
PROJECT: DC Riding Arena
BUILDERS PO#:
FILENAME: DC Riding Arena Option 2

VP BUILDINGS
VARCO PRUDEN
A BlueScope Steel Company
VPC VERSION: 2021.2a

JOBNO: 21-007748-01
DATE: 09/08/2021
DRAWN/CHECK: SDA SDA
PAGE: 41

a division of BlueScope Buildings North America, Inc.

ROOF/WALL STRUCTURAL FASTENER

(T–2) #12–14 x 1 1/4", 5/16" HEX HD, SS CAP W/WASHER

MARK NUMBER	COLOR
097584___	SEE COLOR SUFFIX CHART BELOW

ROOF/WALL STRUCTURAL FASTENER

(T–2) #12–14 x 1 1/2", 5/16" HEX HD, SS CAP W/WASHER

MARK NUMBER	COLOR
097585___	SEE COLOR SUFFIX CHART BELOW

WALL STRUCTURAL FASTENER

(T–2) #17/#12–14 x 1 7/8", STAND OFF 5/16" HEX HD, SS CAP W/WASHER

MARK NUMBER	COLOR
097597___	SEE COLOR SUFFIX CHART BELOW

ROOF/WALL STITCH FASTENER

(T–1) 1/4–14 x 7/8", 5/16" HEX HD, SS CAP W/WASHER

MARK NUMBER	COLOR
097581___	SEE COLOR SUFFIX CHART BELOW

COLOR SUFFIX CHART

SUFFIX	COLOR
100	COOL ARCTIC WHITE
101	COOL EGYPTIAN WHITE
102	COOL COTTON WHITE
103	COOL COLONIAL RED
104	COOL STRAW GOLD
105	COOL DARK BRONZE
106	COOL WEATHERED COPPER
107	COOL BERMUDA GREEN
108	COOL HEMLOCK GREEN
109	COOL LEAF GREEN
110	COOL EBONY
111	COOL IMPERIAL BLUE
112	COOL GRANITE GRAY
113	COOL SIERRA TAN
115	COOL COLBALT BLUE
116	COOL ZINC GRAY
117	COOL COPPER PENNY
118	COOL METALLIC SILVER
119	COOL JADE GREEN
120	COOL BRIGHT RED
121	COOL PARCHMENT
122	COOL OLD TOWN GRAY
UNPNTD	UN PAINTED
SPR	SPECIAL REQUEST

MISC. STRUCTURAL FASTENERS

MARK NUMBER	
55307	(T–3) 1/4–14 x 1 1/4", 5/16" HEX HD
55309	(T–3) 1/4–14 x 2", 5/16" HEX HD
55310	(T–3) 1/4–14 x 3", 3/8" HEX HD
55311	(T–3) 1/4–14 x 4", 3/8" HEX HD
56104	(T–5) #12–24 x 1 1/2", 5/16" HEX HD
59227	(T–5) 1/4–28 x 3", 5/16" HEX HD
59228	(T–5) 1/4–28 x 4", 5/16" HEX HD
55308	(T–AB) #17–14 x 1", 5/16" HEX HD, SS CAP W/WASHER (BAG of 50)
58015	(T–1) 1/4–14 x 1 1/8", 5/16" HEX HD, SS CAP W/ 7/8" WASHER

RIVETS

BULB TITE STRUCTURAL BLIND RIVET

MARK NUMBER	DESCRIPTION	COLOR
55160	VP200 RIVET (RV6604–6–8W OLYMPIC BULB TITE)	ALUMINUM
55181	VP205 RIVET (RV6604–6–4W OLYMPIC BULB TITE)	COOL ARCTIC WHITE
55185	VP205 RIVET (RV6604–6–4W OLYMPIC BULB TITE)	COOL DARK BRONZE

SEALANT

MARK NUMBER	DESCRIPTION
016688	GRAY SKINNING
025392	GRAY NON–SKINNING
80507	BRONZE SKINNING
80531	FLEXIBLE FLASHING SILICONE ADHESIVE (GRAY)

TAPE MASTIC

MARK NUMBER	DESCRIPTION
97663	3/16" X 1 1/2" X 40' ROLL
97662	3/16" X 1" X 28" BOX OF 100 200 LINEAL FEET OF COVERAGE PER BOX
80347	1/8" X 1" X 9" (50) AND 3" (150) BOX 100 LINEAR FEET OF COVERAGE PER BOX
027893	1/8" X 1" X 25' ROLL
025390	3/16" X 1/4" X 40' ROLL

PANEL CLOSURES

MARK NUMBER	DESCRIPTION
80130	PANEL RIB 3' INSIDE CLOSURE
80140	PANEL RIB 3' OUTSIDE CLOSURE
80360	VEE RIB 3' INSIDE CLOSURE
80362	VEE RIB 3' OUTSIDE CLOSURE
80140	RPR 3' INSIDE PANEL CLOSURE
80130	RPR 3' OUTSIDE PANEL CLOSURE
80135	SSR FOAM INSIDE CLOSURE
80136	SSR HARD RUBBER INSIDE CLOSURE

POP RIVETS

POP RIVET 1/8 x 3/8"

MARK NUMBER	COLOR
097580___	SEE COLOR SUFFIX CHART BELOW

COLORADO LICENSED
AMANUEL M. WIBKER
0052792
PROFESSIONAL ENGINEER

09/10/2021

REVIEWED FOR CODE COMPLIANCE
01/27/2022

VP COMMON WAREHOUSE PARTS

DRAWN BY	CHECKED BY	GROUP NUMBER:		
BJW	RJR			
FIRST RELEASE DATE	REVISION DATE	B	S–081767	07
01/22/13	05/16/18			

PERMIT SET- For Building Dept. Approval

THE VP ENGINEER'S SEAL APPLIES ONLY TO THE WORK PRODUCT OF VP AND DESIGN AND PERFORMANCE REQUIREMENTS SPECIFIED BY VP. THE VP ENGINEER'S SEAL DOES NOT APPLY TO THE PERFORMANCE OR DESIGN OF ANY OTHER PRODUCT OR COMPONENT FURNISHED BY VP EXCEPT TO ANY DESIGN OR PERFORMANCE REQUIREMENTS SPECIFIED BY VP.

THIS DRAWING, INCLUDING THE INFORMATION HEREON, REMAINS THE PROPERTY OF VP BUILDINGS. IT IS PROVIDED SOLELY FOR ERECTING THE BUILDING DESCRIBED IN THE APPLICABLE PURCHASE ORDER AND MAY BE REPRODUCED ONLY FOR THAT PURPOSE. IT SHALL NOT BE MODIFIED, REPRODUCED OR USED FOR ANY OTHER PURPOSE WITHOUT PRIOR WRITTEN APPROVAL OF VP BUILDINGS.

THE GENERAL CONTRACTOR AND/OR ERECTOR IS SOLELY RESPONSIBLE FOR ACCURATE GOOD QUALITY WORKMANSHIP IN ERECTING THIS BUILDING IN ACCORDANCE WITH THIS DRAWING, DETAILS REFERENCED IN THIS DRAWING, ALL APPLICABLE VP BUILDINGS ERECTION GUIDES, AND INDUSTRY STANDARDS PERTAINING TO PROPER ERECTION, INCLUDING THE CORRECT USE OF TEMPORARY BRACING.

D

VP Buildings
3200 Players Club Circle Memphis TN 38125

REV	DATE	BY	DESCRIPTION

NTS

9/8/2021 SEDSheet 13:09:03

S-081767

BUILDER	Rule Steel
CUSTOMER	
LOCATION	Clark, Colorado
PROJECT	DC Riding Arena
BUILDERS PO#	
FILENAME:	DC Riding Arena Option 2

VP BUILDINGS
VARCO PRUDEN
A BlueScope Steel Company
VPC VERSION: 2021.2a

JOBNO	21-007748-01
DATE	09/08/2021
DRAWN/CHECK	SDA SDA
PAGE	42

a division of BlueScope Buildings North America, Inc.