A Cabin for
David and Jane Blandford
Lot B8, Marabou, Routt County, Colorado

ELEVATION

CODE ANALYSIS

LEGAL DESCRIPTION
Maribou Lot B8, F1

PROJECT DESCRIPTION
The project is located on Lot B8, Marabou Ranch. The new Caretaker Cabin will be a 1-story ranch with walk out lower level. The structure will be wood frame and utilize exterior materials that give it a rustic feel The living spaces will be separated by a one-hour seperation from the garage per IRC.

CODE COMPLIANCE
2018 International Residence Code

LAND USE ZONING
AF

OCCUPANCY TYPE
Main Residence.....Group R, Division 3
Main Garage.....Group U, Division 1

DESIGN CRITERIA
Table R301.2(1) Climate & Geographic Design Criteria
- Roof Snow Load - 85 PSF
- Wind Speed - 90 MPH
- Seismic Design Category -
  - Exempt per IBC 1613.1 and IRC R301.2.2
- Subject to Damage by Weathering - Severe
- Subject to Damage by Frostline Depth - 48 inches
- Subject to Damage by Termite - None to slight
- Subject to Damage by Decay - None to slight
- Winter Design Temperature - -15°F (-26°C)
- Ice Shield Underlayment Required - Yes
- Flood Hazard - FIRM, February 4, 2005
- Air Freeze Index - Steamboat 2239
- Mean Annual Temperature - 40° to 45°F

CONSTRUCTION TYPE
Type V, Non-rated, Sprinklered

GEOTECHNICAL REPORT:
Northwest Colorado Consultants, Inc. (NWCC)
Soils Report #01-4721 Dated January 26, 2001

PROJECT SETBACKS
In accordance with the building envelope shown, that indicates the confined area of building. Refer to the site plan for location.

SITE STATISTICS
Site Area:. . . . . .295,337 s.f.
or 6.78 acres
Building Envelope: . . . . . 38,333 s.f.
or .88 acres

BUILDING STATISTICS
Lower Level Square Footage Breakdown (Gross s.f.)

Garage/Gear: . . . . . 1,159 s.f.

Total Lower Level Square Footage:. . . . . 1,159 s.f.

Upper Level Square Footage Breakdown: (Gross s.f.)
Living:. . . . . 791 s.f.
Decks:. . . . . 297 s.f.
Total Upper Level Square Footage:. . . . . 791 s.f.

Total living Area Square Footage:. . . . . 791 s.f.

Total Building Square Footage:. . . . . 1,950 s.f.
(including living area, garage, gear, and storage)

Building Height:
Max. Allowable Envelope Height To Ridge: 35'-0"
Actual Building Height:. . . . . 24'-3½"

DISCIPLINE

OWNER
David and Jane Blandford
c/o Steamboat Architectural Associates (SAA)
345 Lincoln Avenue, Suite 200
P.O. Box 772910
Steamboat Springs, Colorado 80477
Phone: 970.879.0819
Fax: 970.879.3406
Email: SAA@steamboatarchitectural.com
Contact: William J. Rangitsch

ARCHITECT
Steamboat Architectural Associates (SAA)
345 Lincoln Avenue, Suite 200
P.O. Box 772910
Steamboat Springs, Colorado 80477
Phone: 970.879.0819
Fax: 970.879.3406
Email: SAA@steamboatarchitectural.com
Contact: William J. Rangitsch

GENERAL CONTRACTOR
Altitude Custom Builders, Inc
P.O. Box 883013
Steamboat Springs, CO 80488
Cell: 970.238.0630
Email: altitudecustombuilders@gmail.com
Contact: Nathan Reynolds

GEOTECHNICAL ENGINEER
NWCC
2580 Copper Ridge Drive
Steamboat Springs, CO 80477
Phone: 970.879.7888
Fax: 970.879.7891
Email: blen@nwccusa.com
Contact: Brian D. Len, PE

STRUCTURAL ENGINEER
Alpenglow Engineering Solutions, Inc
P.O. Box 773501
Steamboat Springs, Colorado 80477-3501
Phone: 970.879.1181
Fax: 970.879.3680
Email: ben@alpengloweng.com
Contact: Ben Schutt

BUILDING AUTHORITY
Routt County Building Dept.
136 6th Street
Steamboat Springs, Colorado 80487
Phone: 970.870.5566
Fax: 970.870.5489
Email: tallen@co.routt.co.us
Contact: Ted Allen

MECHANICAL / PLUMBING
Utility Layout Drawings by SAA
Technical Data by Mechanical/Plumbing Contractor

ELECTRICAL
Utility Layout Drawings by SAA
Technical Data by Electrical Contractor

VICINITY MAP

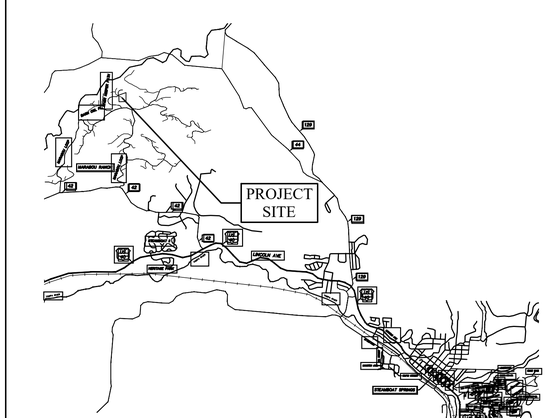

SHEET INDEX

ARCHITECTURAL DRAWINGS

A0.0 Cover Sheet

A1.0 Site Plan
A1.1 Partial Site Plan, Site Notes, Project Notes, Solar Panels
A1.2 Construction Management Plan

A2.0 Lower Level Plan
A2.1 Upper Level Plan
A2.2 Roof Plan

A3.0 Elevations, Details
A3.1 Elevations, Details

A4.0 Sections, Section Notes, Details

A5.0 Details

A8.0 Lower Level Utility Plan, Key to Symbols
A8.1 Upper Level Utility Plan, Utility Notes

L-1 Landscape Plan

STRUCTURAL DRAWINGS

S2.0 Foundation Plan, Foundation Details, General Notes
S2.1 Upper Floor & Roof Framing Plans,Truss Profiles, Details

ADDITIONAL NOTES
Contractor and Subcontractor shall be responsible for local code compliance, technical data and system component design as required for design.

SUBMISSION

for
Construction

THESE DRAWINGS DO NOT INCLUDE THE COMPONENTS NECESSARY FOR CONSTRUCTION SAFETY.

© Copyright 2015 SAA, P.C.

Reviewed for Code Compliance
06/23/2022

Reviewed for Code Compliance
07/19/2022

ELEVATION | DISCIPLINES | SHEET INDEX | CODE ANALYSIS | VICINITY MAP | SUBMISSION

STATE OF COLORADO
WILLIAM JOSEPH RANGITSCH
34986
LICENSED ARCHITECT

William J. Rangitsch
970.879.0819
p.o. box 772910 345 lincoln ave ste. 200
steamboat springs, co. 80477

STEAMBOAT ARCHITECTURAL ASSOCIATES

A Cabin for
David & Jane Blandford
Lot B8, Marabou
Routt County, Colorado

09 JUNE 22	AS1- CHANGES PER RCRBD-ADU, DECK STAIRS
30 AUG 21	

A0.0

21-06

A0.0_Cover Sheet

C:\SAA\Blandford Cabin\Blandford Cabin A0.0

6/8/2022 3:21 PM

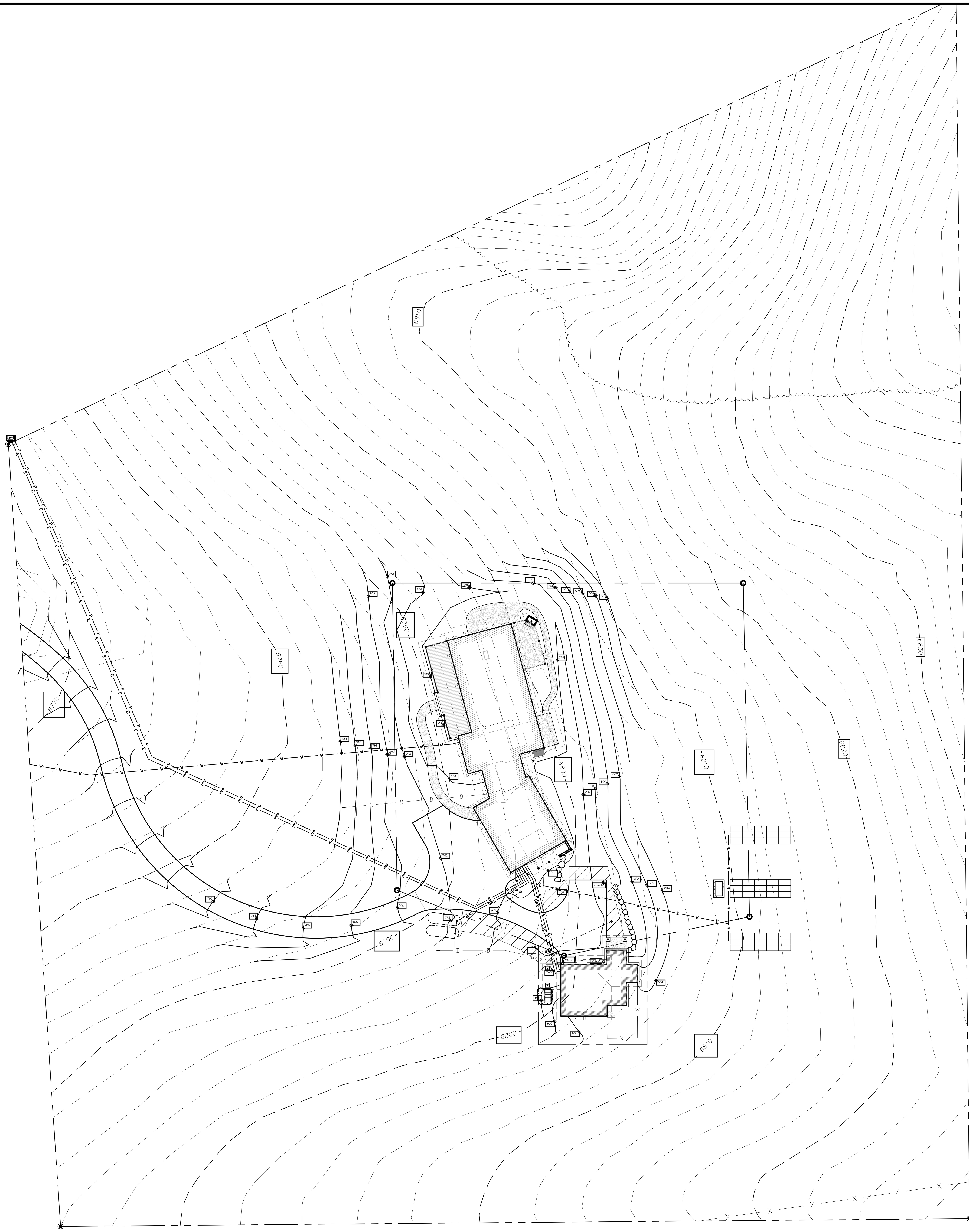

N

1 SITE PLAN

1"=30'
SEE PLAT

THESE DRAWINGS
DO NOT INCLUDE
THE COMPONENTS
NECESSARY FOR
CONSTRUCTION
SAFETY.

© Copyright 2015 SAA, P.C.

Reviewed for
Code Compliance
06/23/2022

Reviewed for
Code Compliance
07/19/2022

SITE PLAN

STATE OF COLORADO
WILLIAM JOSEPH RANGITSCH
B-1986
LICENSED ARCHITECT

William J. Rangitsch
970.879.0819
p.o. box 772910 345 lincoln ave ste. 200
steamboat springs, co. 80477

STEAMBOAT
ARCHITECTURAL
ASSOCIATES

A Cabin for
David & Jane Blandford
Lot B8, Marabou
Routt County, Colorado

09 JUNE 22	AS1– CHANGES PER RCRBD–ADU, DECK STAIRS

30 AUG 21

A1.0

21–06

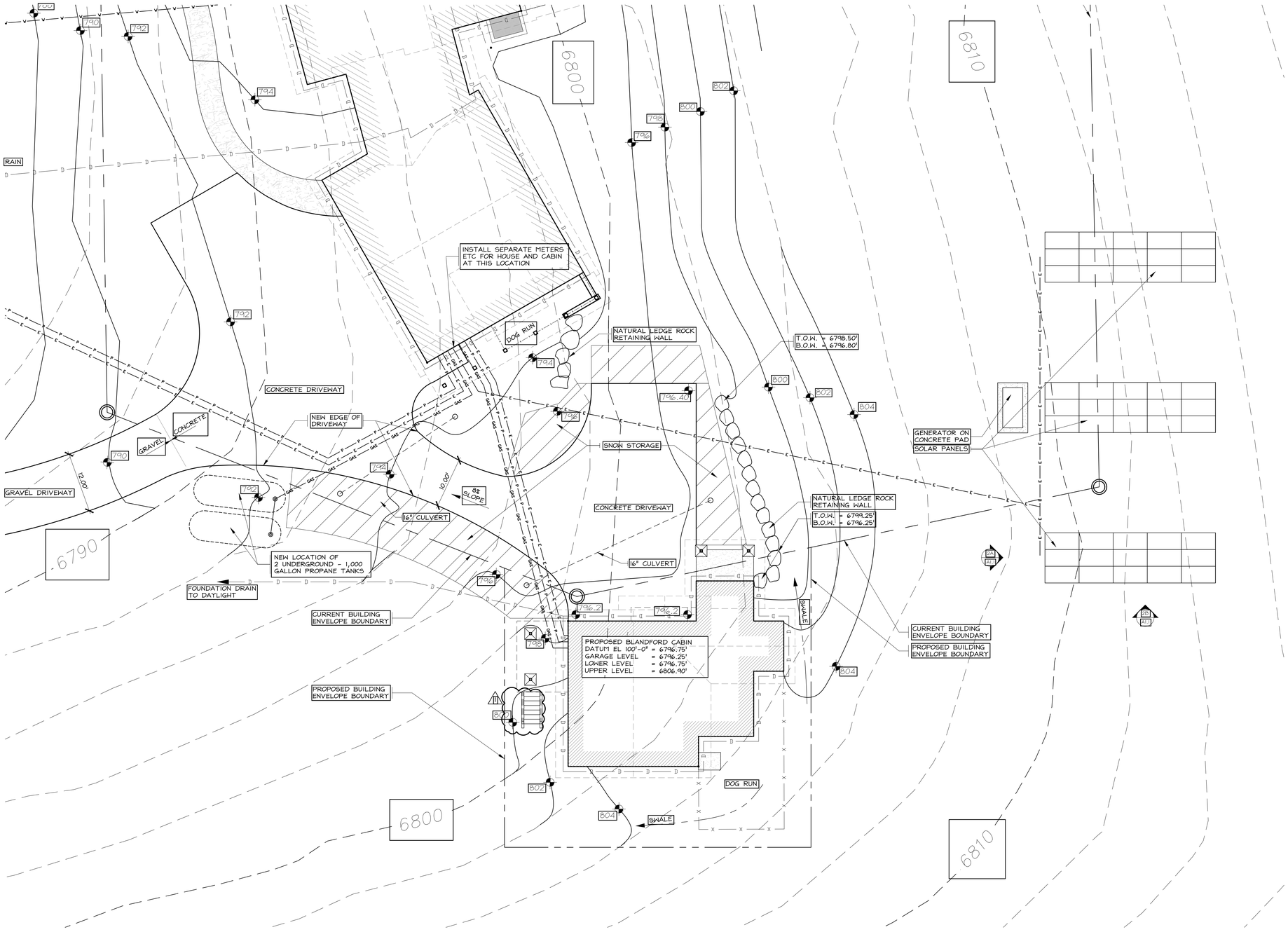

PROJECT NOTES

1. ALL WORK SHALL COMPLY WITH FEDERAL, STATE AND LOCAL LAWS, CODES AND ORDINANCES.
2. TEMPORARY SPACE HEATING SHALL BE THE CONTRACTOR'S RESPONSIBILITY AND SHALL BE DONE IN A SAFE, SENSIBLE MANNER WITH PERIODIC CHECKS TO ALL SYSTEMS.
3. CONTRACTORS SHALL CARRY BUILDERS RISK, WORKMAN'S COMPENSATION, CONTRACTOR'S LIABILITY, PERSONAL INJURY, COMPREHENSIVE AUTOMOBILE AND PROPERTY DAMAGE INSURANCE. OWNER TO CARRY FIRE INSURANCE ON THE FRAMED STRUCTURE AND COMPLETED WORK IN PROGRESS.
4. CONTRACTOR TO VERIFY ALL DIMENSIONS AND CONDITIONS SHOWN OF THESE DRAWINGS WITH THOSE AT THE SITE. ANY VARIATION WHICH REQUIRES A PHYSICAL CHANGE SHALL BE BROUGHT TO THE ATTENTION OF THE ARCHITECT.
5. THESE DOCUMENTS DO NOT INCLUDE THE NECESSARY COMPONENTS FOR CONSTRUCTION SAFETY. SAFETY, CARE OF UTILITIES AND ADJACENT PROPERTIES DURING CONSTRUCTION, AND COMPLIANCE WITH FEDERAL AND STATE SAFETY REGULATIONS ARE THE RESPONSIBILITY OF THE CONTRACTOR.
6. DO NOT DIG - VERIFY LOCATION OF ALL UTILITIES BEFORE DIGGING.
7. STRIP SITE OF TOP SOIL AND STOCKPILE BEFORE CONSTRUCTION BEGINS.
8. THE ORGANIZATION OF THE DRAWINGS AND SPECIFICATIONS INTO TYPES, SECTIONS, ARTICLES AND THE ARRANGEMENT OF THE DRAWINGS SHALL NOT CONTROL THE CONTRACTOR IN DIVIDING THE WORK AMONG SUB-CONTRACTORS, OR IN ESTABLISHING THE WORK TO BE PERFORMED BY ANY TRADE.

SITE NOTES

NOT A CERTIFIED PLAT
EXISTING GRADE
FINISH GRADE
CONTOUR INTERVAL = 2'-0"

CAUTION:
CONTRACTOR TO VERIFY LOCATION OF ALL UTILITY LINES BEFORE DIGGING.

N

1 PARTIAL SITE PLAN

1"=10'
SEE PLAT

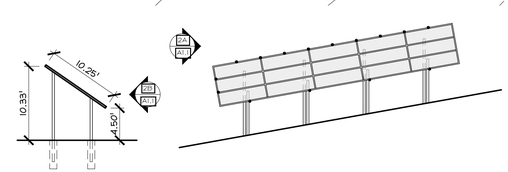

2 SOLAR PANELS

1"=10'
SEE 1/A1.1

THESE DRAWINGS DO NOT INCLUDE THE COMPONENTS NECESSARY FOR CONSTRUCTION SAFETY.

© Copyright 2015 SAA, P.C.

Reviewed for Code Compliance
06/23/2022

Reviewed for Code Compliance
07/19/2022

PARTIAL SITE PLAN
PROJECT NOTES
SITE NOTES

STATE OF COLORADO
WILLIAM JOSEPH RANGITSCH
34986
LICENSED ARCHITECT

William J. Rangitsch
970.879.0819
p.o. box 772910 345 lincoln ave ste. 200
steamboat springs, co. 80477

STEAMBOAT ARCHITECTURAL ASSOCIATES

A Cabin for
David & Jane Blandford
Lot B8, Marabou
Routt County, Colorado

09 JUNE 22 | AS1- CHANGES PER RCRBD-ADU, DECK STAIRS | 1
30 AUG 21

A1.1

21-06

A3

C:\SAA\Blandford Cabin\Blandford Cabin A1.1.dwg

6/9/2022 3:21 PM

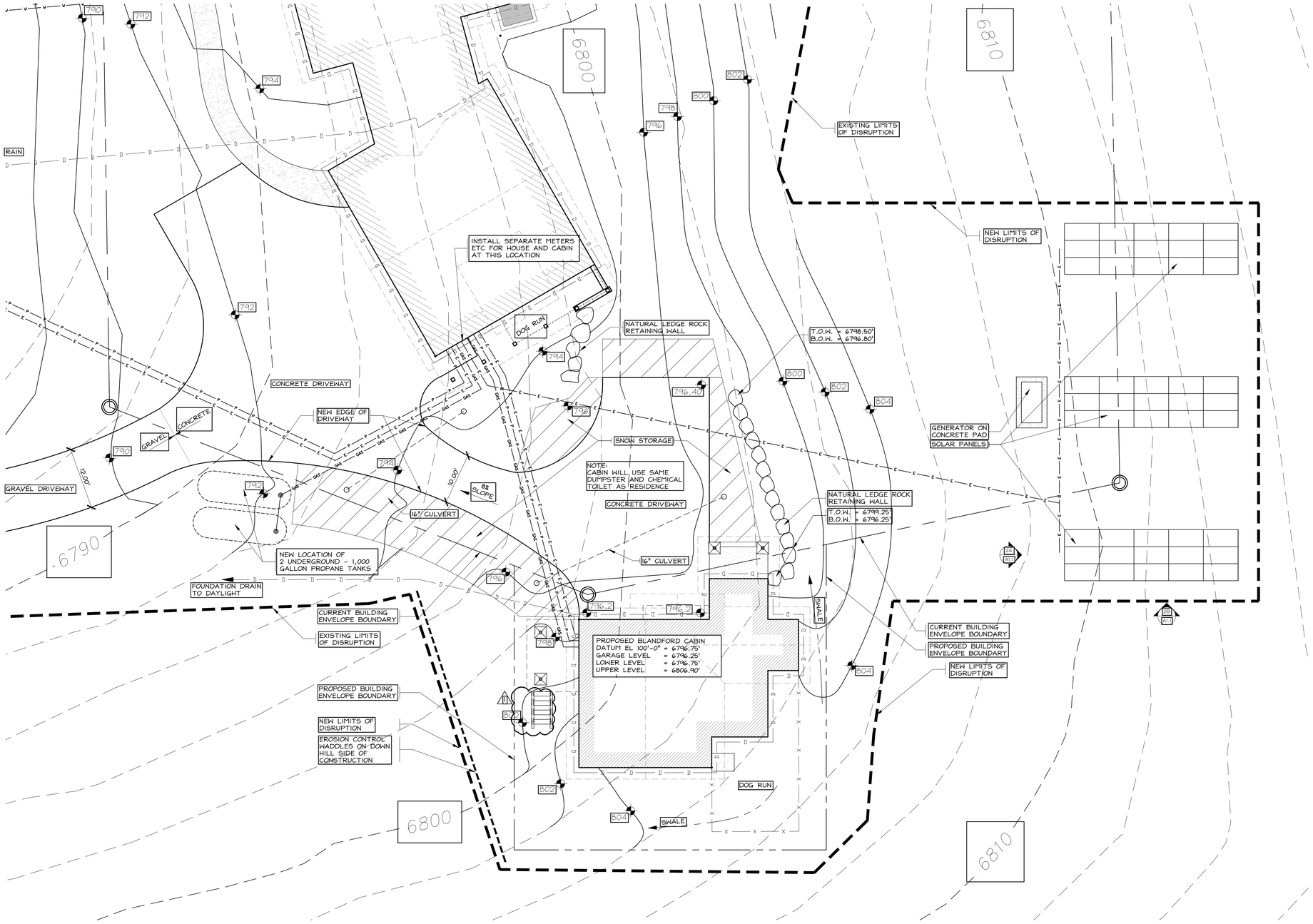

N

1 CONSTRUCTION MANAGEMENT PLAN

1"=10'
SEE: A1.0

THESE DRAWINGS DO NOT INCLUDE THE COMPONENTS NECESSARY FOR CONSTRUCTION SAFETY.

© Copyright 2015 SAA, P.C.

CONSTRUCTION MANAGEMENT PLAN

Reviewed for Code Compliance
06/23/2022

Reviewed for Code Compliance
07/19/2022

STATE OF COLORADO
WILLIAM JOSEPH RANGITSCH
LICENSED ARCHITECT

William J. Rangitsch
970.879.0819
p.o. box 772910 345 lincoln ave ste. 200
steamboat springs, co. 80477

STEAMBOAT ARCHITECTURAL ASSOCIATES

A Cabin for
David & Jane Blandford
Lot B8, Marabou
Routt County, Colorado

09 JUNE 22 | AS1- CHANGES PER RCRBD-ADU, DECK STAIRS
30 AUG 21

A1.2

21-06

A1.2 CM

C:\SAA\Blandford Cabin\Blandf. Cabin A1.0

5/9/2022 3:31 PM

GA FILE NO. FC 5530	GENERIC	1 HOUR FIRE	

WOOD I-JOISTS, GYPSUM WALLBOARD

Base layer 5/8" type X gypsum wallboard applied at right angles to wood I-joists 24" o.c. with 1-1/4" Type W or S drywall screws 24" o.c. **Face** layer 5/8" type X gypsum wallboard or gypsum veneer base applied at right angles to I-joists with 1-7/8" Type W or S drywall screws 12" o.c. at joints and intermediate I-joists and 1-1/2" Type G drywall screws 12" o.c. placed 2" back on either side of end joints. Joints offset 24" from base layer joints. Wood I-joists supporting 1/2" wood structural panels applied at right angles to joists with 8d nails. **Ceiling provides one-hour fire-resistance protection for I-joists.**

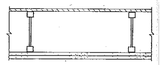

Approx. Ceiling Weight: 5 psf
Fire Test: FM FC 172, 2-25-72; ITS, 8-6-98

RCRBD Note: 1-hour assembly to be installed on entire garage ceiling to protect it from the SDU above. Type X 5/8 drywall to be installed on exterior garage walls that support structural members of the floor above in the SDU as well.

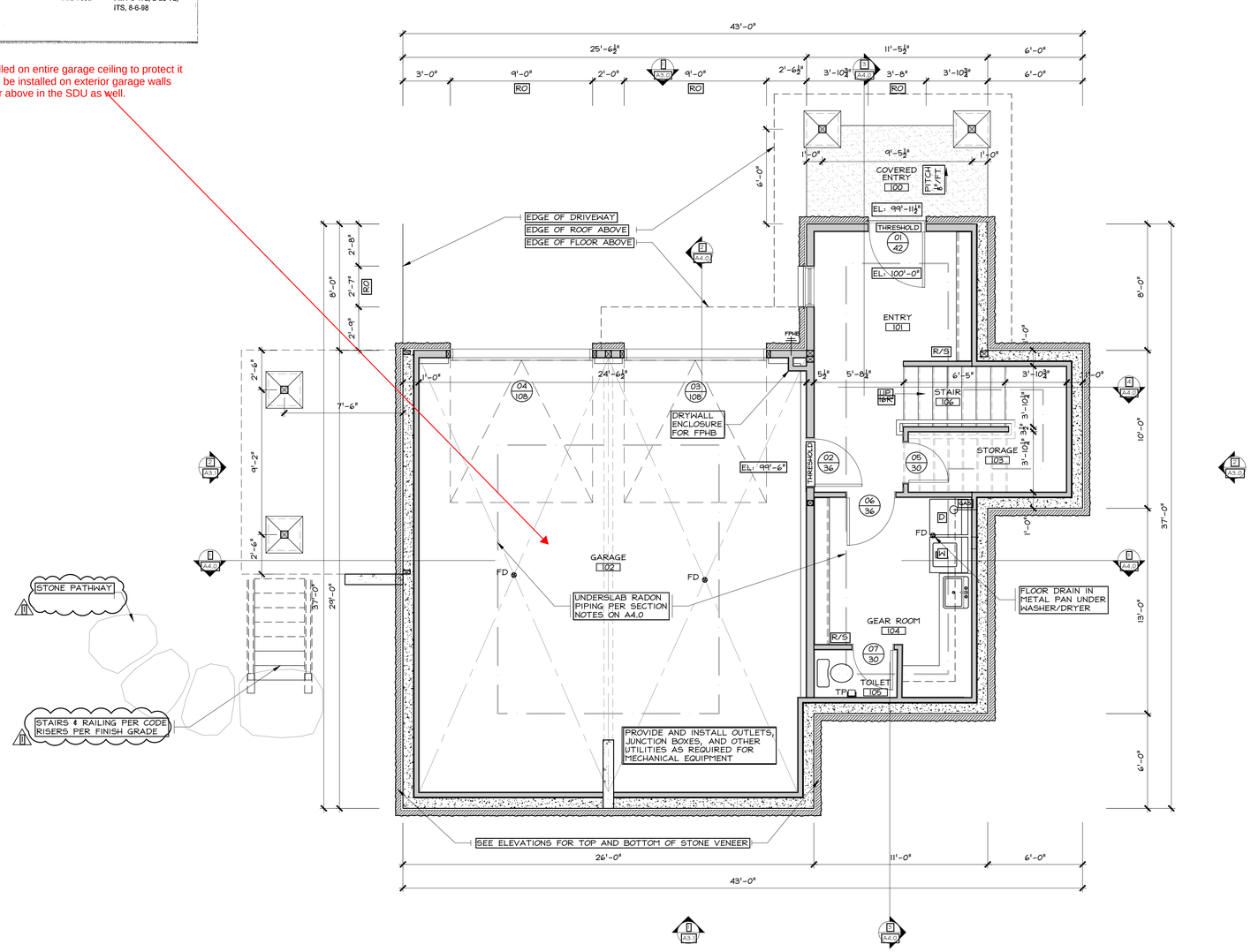

1 LOWER LEVEL PLAN

1/4" = 1'-0"
SEE A1.0

GARAGE= 1,152 SF

THESE DRAWINGS DO NOT INCLUDE THE COMPONENTS NECESSARY FOR CONSTRUCTION SAFETY.

© Copyright 2015 SAA, P.C.

Reviewed for Code Compliance
06/23/2022

Reviewed for Code Compliance
07/19/2022

LOWER LEVEL PLAN

STATE OF COLORADO
WILLIAM JOSEPH RANGITSCH
LICENSED ARCHITECT

William J. Rangitsch
970.879.0819
p.o. box 772910 345 lincoln ave ste. 200
steamboat springs, co. 80477
STEAMBOAT ARCHITECTURAL ASSOCIATES

A Cabin for
David & Jane Blandford
Lot B8, Marabou
Routt County, Colorado

09 JUNE 22 | AS1- CHANGES PER RCRBD-ADU, DECK STAIRS
30 AUG 21

A2.0

21-06

A2.0

C:\SAA\Blandford Cabin\Blandfo Cabin A2.0

6/9/2022 3:21 PM

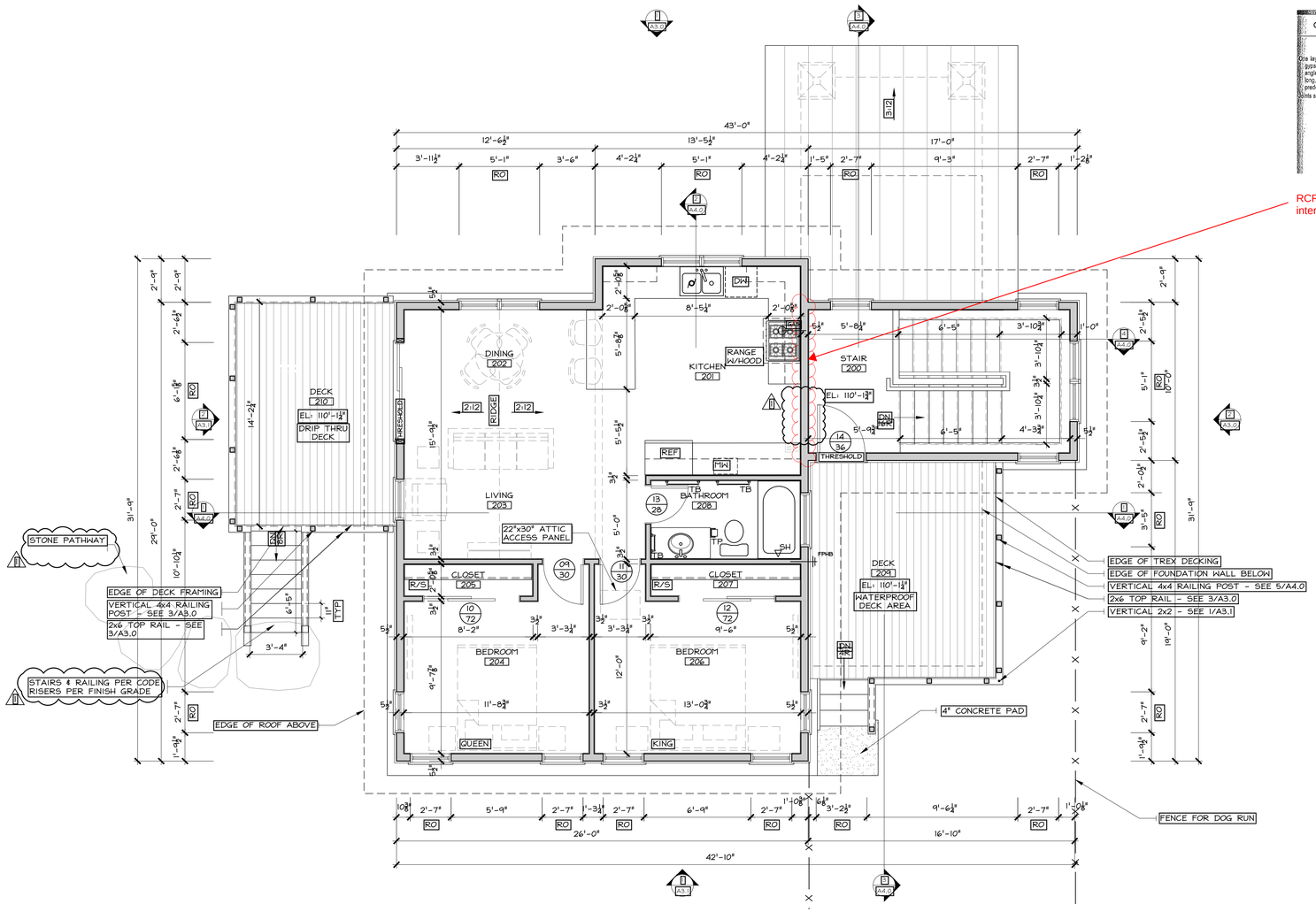

GA FILE NO. WP 3605	GENERIC	1 HOUR FIRE	30 to 34 STC SOUND

GYPSUM WALLBOARD, WOOD STUDS

One layer 5/8" type X plain or predecorated gypsum wallboard, water-resistant gypsum backing board, or gypsum veneer base applied parallel or at right angles to each side of 2 x 4 wood studs 16" o.c. with 6d coated nails, 1-7/8" long, 0.0915" shank, 1/4" heads, 7" o.c. Joints of square edge, bevel edge or predecorated wallboard may be left exposed.

Joints staggered 16" on opposite sides. **(LOAD-BEARING)**

Thickness:	4-7/8"
Approx. Weight:	7 psf
Fire Test:	UL R1319-4, -6, 6-17-52; UL R2717-39, 1-20-66; UL R3501-52, 3-15-66, UL Design U305; ULC Design W301
Sound Test:	OR 64-8, 2-4-64

RCRBD Note: 1-Hour wall required between SDU in kitchen area and top of interior stairs used by primary dwelling owner at clouded area.

1 UPPER LEVEL PLAN

1/4" = 1'-0"
SEE A1.0

LIVING= 797 SF

THESE DRAWINGS DO NOT INCLUDE THE COMPONENTS NECESSARY FOR CONSTRUCTION SAFETY.

© Copyright 2015 SAA, P.C.

Reviewed for Code Compliance
06/23/2022

UPPER LEVEL PLAN

Reviewed for Code Compliance
07/19/2022

STATE OF COLORADO
WILLIAM JOSEPH RANGITSCH
34986
LICENSED ARCHITECT

William J. Rangitsch
970.879.0819
p.o. box 772910 345 lincoln ave. ste. 200
steamboat springs, co. 80477
STEAMBOAT ARCHITECTURAL ASSOCIATES

A Cabin for
David & Jane Blandford
Lot B8, Marabou
Routt County, Colorado

09 JUNE 22 | AS1- CHANGES PER RCRBD-ADU, DECK STAIRS
30 AUG 21

A2.1

21-06

N **1 ROOF PLAN**

1/4" = 1'-0"
SEE A1.0

THESE DRAWINGS DO NOT INCLUDE THE COMPONENTS NECESSARY FOR CONSTRUCTION SAFETY.

© Copyright 2015 SAA, P.C.

Reviewed for Code Compliance
06/23/2022

Reviewed for Code Compliance
07/19/2022

ROOF PLAN

STATE OF COLORADO
WILLIAM JOSEPH RANGITSCH
PE-0986
LICENSED ARCHITECT

William J. Rangitsch
970.879.0819
p.o. box 772910 345 lincoln ave ste. 200
steamboat springs, co. 80477

STEAMBOAT ARCHITECTURAL ASSOCIATES

A Cabin for
David & Jane Blandford
Lot B8, Marabou
Routt County, Colorado

30 AUG 21

A2.2

21-06

A23

C:\SAA\Blandford Cabin\Blandford Cabin A23

6/8/2022 3:31 PM

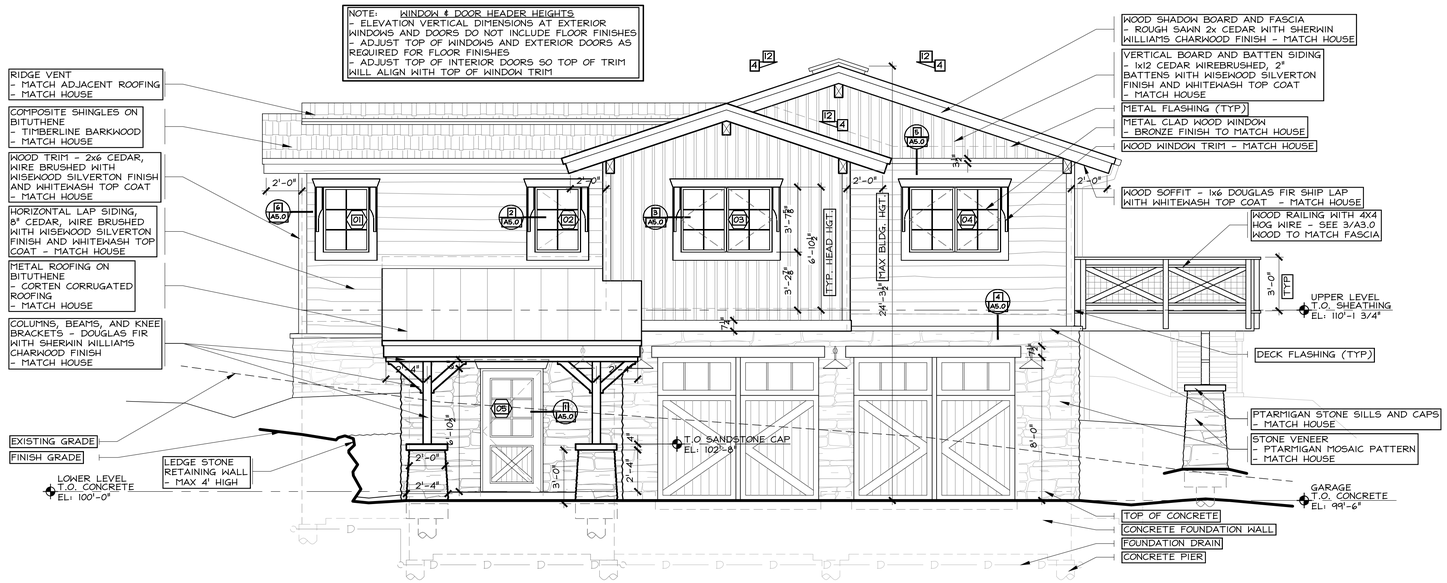

NOTES THIS ELEVATION ARE TYPICAL

1 NORTH ELEVATION

1/4" = 1'-0"
SEE: A2.0 thru A2.2

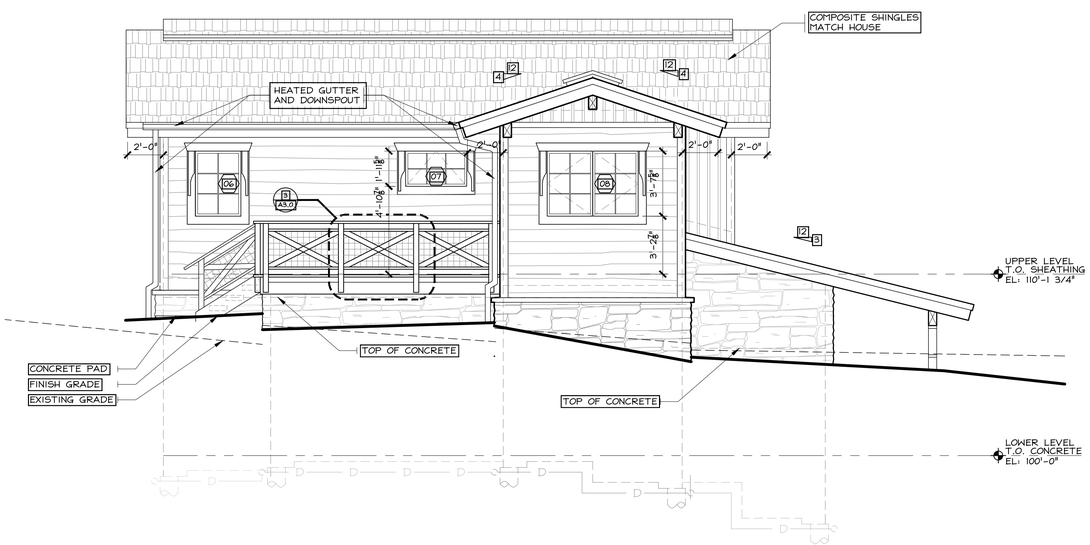

SEE 1/A3.0 FOR TYPICAL ELEVATION NOTES

2 EAST ELEVATION

1/4" = 1'-0"
SEE: A2.0 thru A2.2

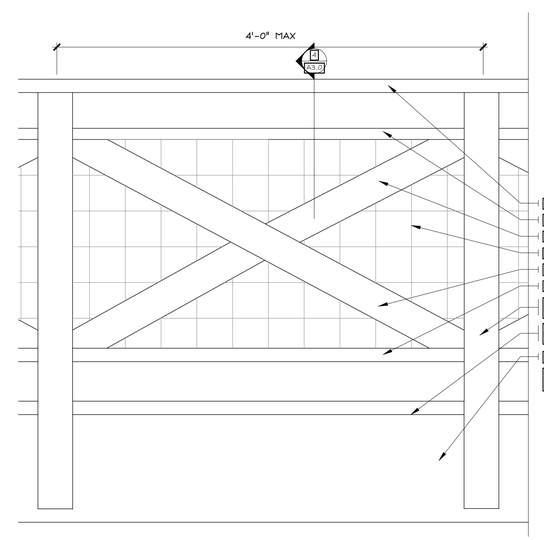

AT EXTERIOR RAILINGS
- DRIP THRU DECK CONDITION SHOWN
- SEE 5/A4.0 & 3/A3.1 FOR WATERPROOF DECK DETAILS

3 DETAIL

1 1/2" = 1'-0"
SEE 27A3.0

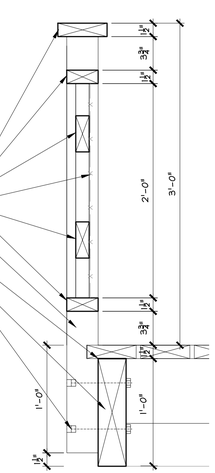

AT EXTERIOR RAILINGS
- DRIP THRU DECK CONDITION SHOWN
- SEE 5/A4.0 & 3/A3.1 FOR WATERPROOF DECK DETAILS

4 DETAIL

1 1/2" = 1'-0"
SEE 27A3.0

THESE DRAWINGS DO NOT INCLUDE THE COMPONENTS NECESSARY FOR CONSTRUCTION SAFETY.

© Copyright 2015 S.A.A. P.C.

Reviewed for Code Compliance
06/23/2022

Reviewed for Code Compliance
07/19/2022

ELEVATIONS
DETAILS

STATE OF COLORADO
WILLIAM JOSEPH RANGITSCH
PLA986
LICENSED ARCHITECT

William J. Rangitsch
970.879.0819
p.o. box 772910 345 lincoln ave ste. 200
steamboat springs, co. 80477

STEAMBOAT ARCHITECTURAL ASSOCIATES

A Cabin for
David & Jane Blandford
Lot B8, Marabou
Routt County, Colorado

30 AUG 22

A3.0

21-06

A3.0

C:\SAA\Blandford Cabin\Blandfo Cabin A3.0

6/8/2022 3:21 PM

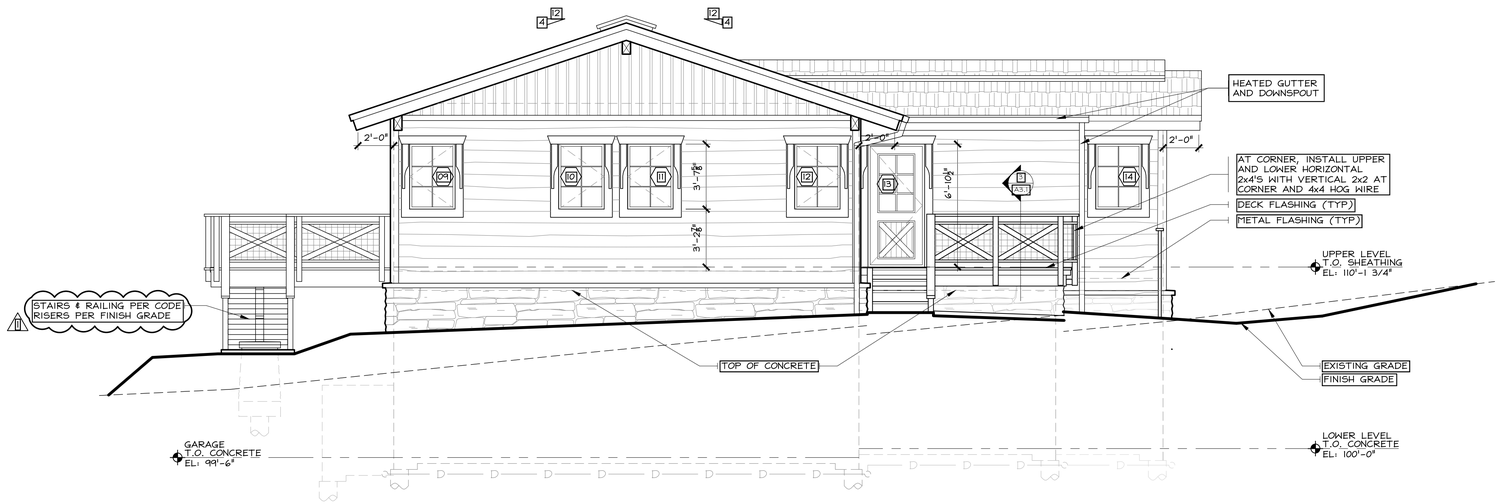

SEE 1/A3.0 FOR TYPICAL ELEVATION NOTES

1 SOUTH ELEVATION

1/4" = 1'-0"
SEE: A2.0 thru A2.2

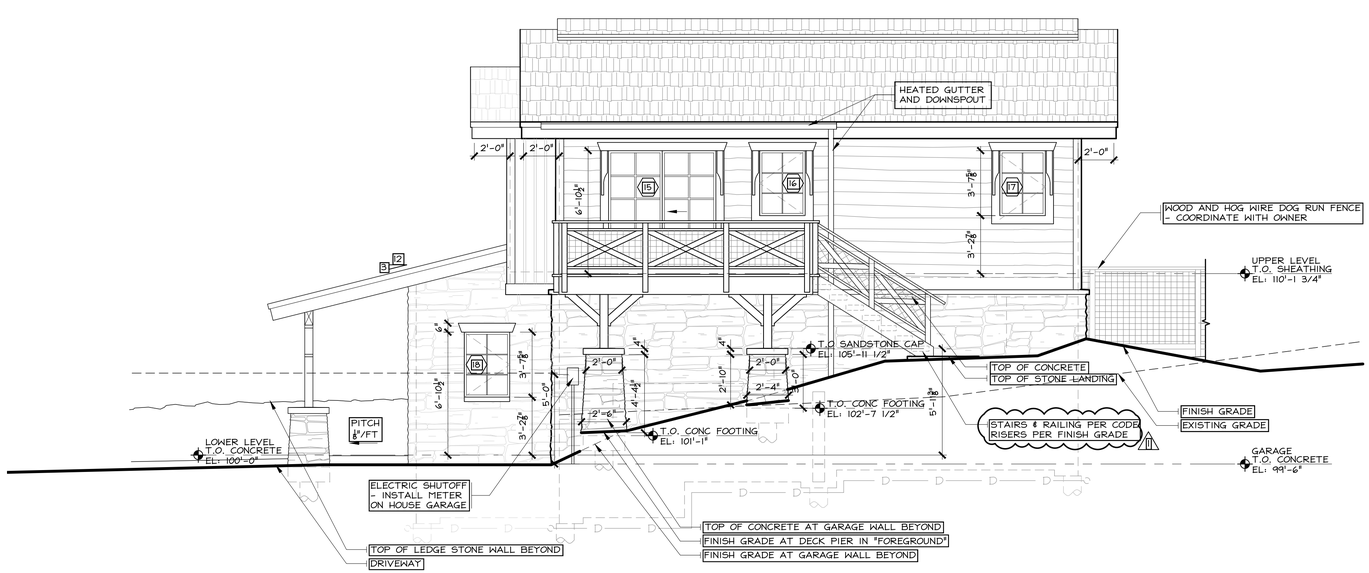

SEE 1/A3.0 FOR TYPICAL ELEVATION NOTES

2 WEST ELEVATION

1/4" = 1'-0"
SEE: A2.0 thru A2.2

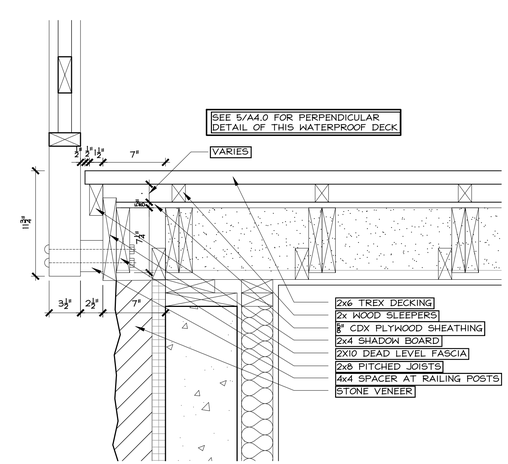

AT WATERPROOF DECK

3 DETAIL

1 1/2" = 1'-0"
SEE: 1/A3.1

THESE DRAWINGS DO NOT INCLUDE THE COMPONENTS NECESSARY FOR CONSTRUCTION SAFETY.

© Copyright 2015 S.A.A. P.C.

Reviewed for Code Compliance
06/23/2022

Reviewed for Code Compliance
07/19/2022

ELEVATIONS
DETAILS

STATE OF COLORADO
WILLIAM JOSEPH RANGITSCH
PE 0986
LICENSED ARCHITECT

William J. Rangitsch
970.879.0819
p.o. box 772910 345 lincoln ave ste. 200
steamboat springs, co. 80477
STEAMBOAT ARCHITECTURAL ASSOCIATES

A Cabin for
David & Jane Blandford
Lot B8, Marabou
Routt County, Colorado

09 JUNE 22 | AS1- CHANGES PER RCRBD-ADU, DECK STAIRS
30 AUG 21

A3.1

21-06

A3.1
C:\SAA\Blandford Cabin\Blandf Cabin A3.1
6/9/2022 3:21 PM

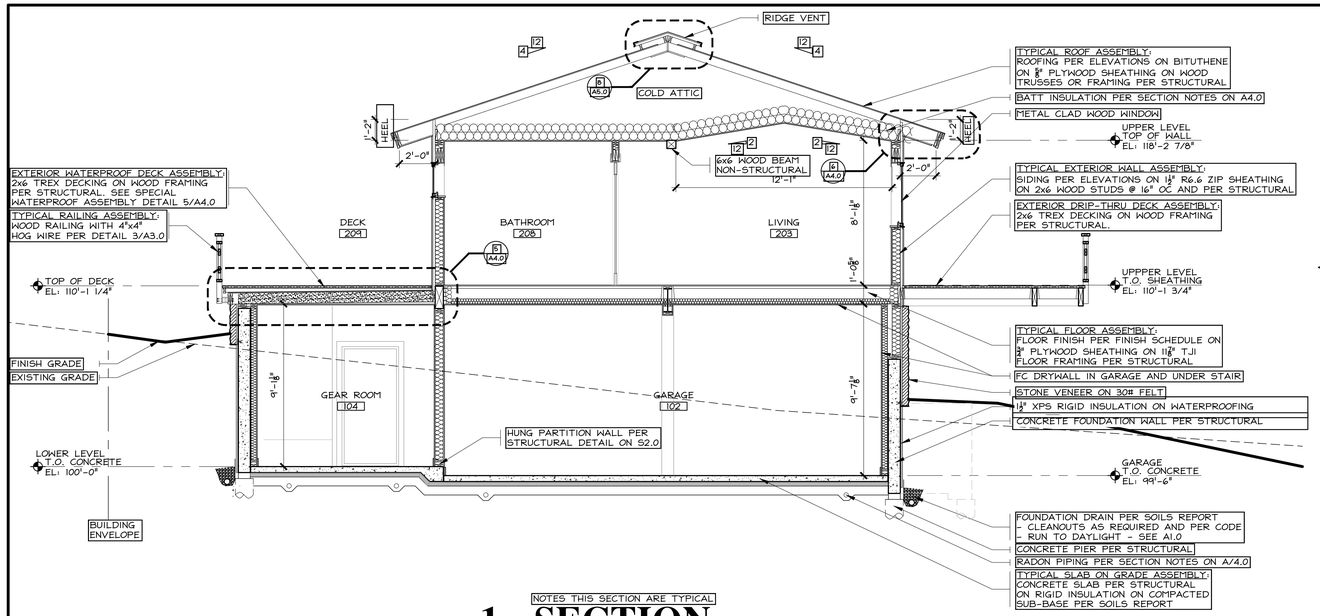

NOTES THIS SECTION ARE TYPICAL

1 SECTION

1/4" = 1'-0"
SEE: A2.0 thru A2.2

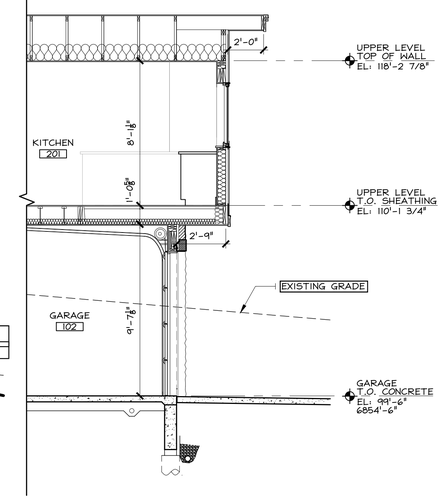

SEE 1/A4.0 FOR TYPICAL SECTION NOTES

2 SECTION

1/4" = 1'-0"
SEE: A2.0 thru A2.2

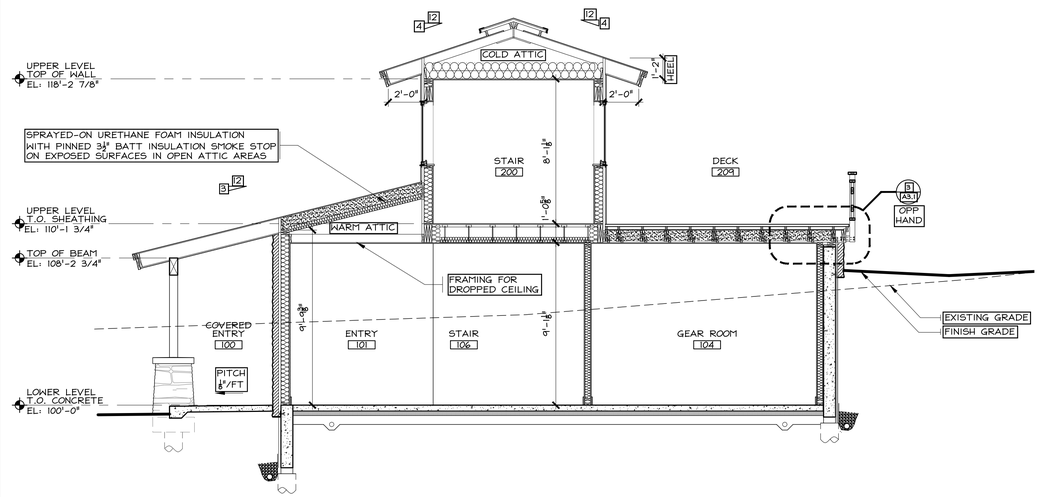

SEE 1/A4.0 FOR TYPICAL SECTION NOTES

3 SECTION

1/4" = 1'-0"
SEE: A2.0 thru A2.2

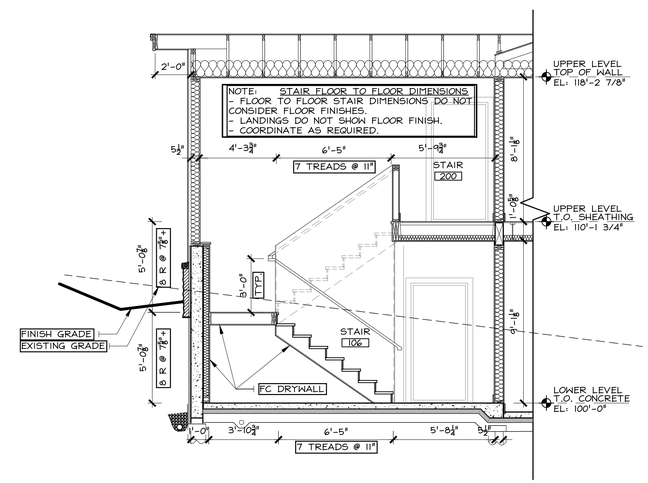

SEE 1/A4.0 FOR TYPICAL SECTION NOTES

4 STAIR SECTION

1/4" = 1'-0"
SEE: A2.0 thru A2.2

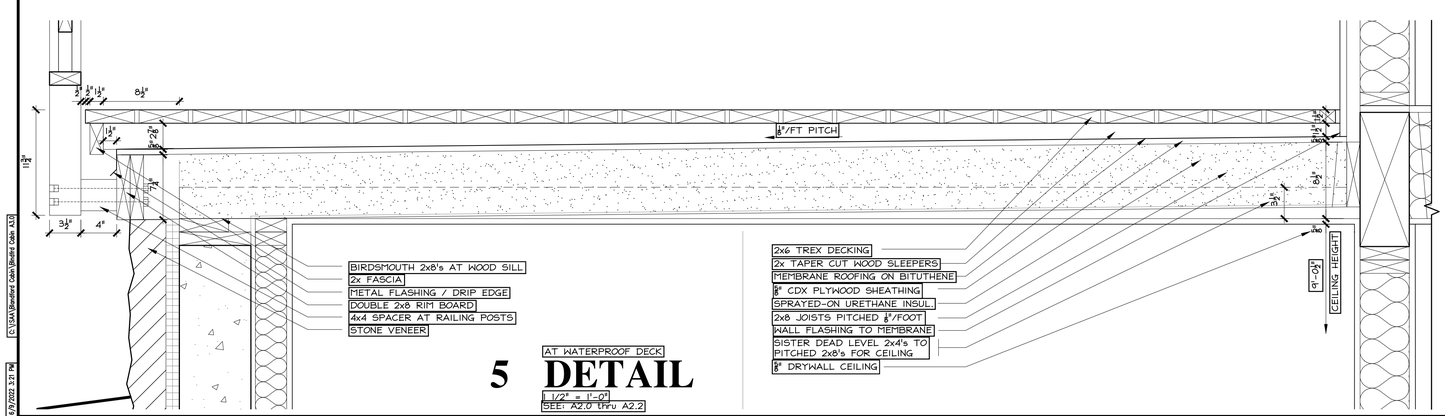

AT WATERPROOF DECK

5 DETAIL

1 1/2" = 1'-0"
SEE: A2.0 thru A2.2

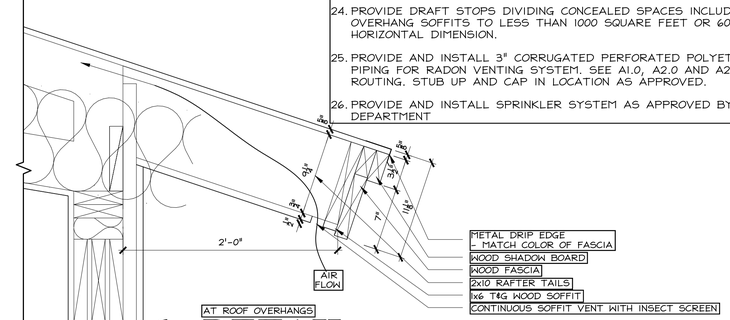

AT ROOF OVERHANGS

6 DETAIL

1 1/2" = 1'-0"
SEE: A2.0 thru A2.2

SECTION NOTES

1. FIELD MEASURE FOR ALL CABINETWORK.
2. COORDINATE LOCATION OF ELECTRICAL OUTLET AND SWITCH BOXES WITH TILE AND OTHER FINISH MATERIALS.
3. REFER TO FOUNDATION PLAN FOR FOUNDATION REQUIREMENTS.
4. REFER TO FRAMING PLANS FOR STRUCTURAL REQUIREMENTS.
5. REFER TO WINDOW SCHEDULE FOR SIZE AND DESCRIPTION.
6. REFER TO ROOM FINISH SCHEDULE FOR INTERIOR FINISHES.
7. SEE SPECIFICATIONS FOR MATERIAL DESCRIPTIONS.
8. SOLID BLOCKING IS REQUIRED PER IRC 2015 AND FOR HORIZONTAL MEMBERS AT SUPPORTS WHERE COLUMNS PASS THROUGH FLOORS, FOR VERTICAL MEMBERS AT MID-HEIGHT, FOR FIRE BLOCKING, AND AS BACKING FOR CABINETS, SHELVES, FIXTURES, VERTICAL PANELING, HARDWARE AND MISCELLANEOUS ATTACHMENTS.
9. APPROVED CORROSION-RESISTIVE FLASHING SHALL BE PROVIDED IN THE EXTERIOR WALL ENVELOPE IN SUCH A MANNER AS TO PREVENT ENTRY OF WATER TO THE BUILDING STRUCTURAL FRAMING COMPONENTS PER IRC 2018.
10. PROVIDE BITUTHENE "ICE & WATER GUARD" BELOW ALL ROOFING. UP-SLOPE MATERIALS MUST LAP OVER DOWN-SLOPE MATERIAL BY MINIMUM 2".
11. TYVEC OR EQUAL BEHIND ALL EXTERIOR SIDING.
12. 30# FELT BEHIND ALL STONE VENEERS
13. INSULATION REQUIREMENTS:
    a. COMPLY WITH 2018 INTERNATIONAL ENERGY CONSERVATION CODE CLIMATE ZONE 7.

    WHERE UNCOMPRESSED INSULATION EXTENDS OVER THE WALL TOP PLATE AT EAVES (EXCEPTION AS NOTED IN IECC SECTION 402.2.1):

ROOF/ATTIC	R-38	11" BATTS
ROOF	R-43.75	7" SPRAYED-ON URETHANE

    WHERE UNCOMPRESSED INSULATION DOES NOT EXTEND OVER THE WALL TOP PLATE AT EAVES:

ROOF/ATTIC	R-49	14" BATTS
ROOF	R-50	8" SPRAYED-ON URETHANE

    COMBINE THE FOLLOWING FOR COMPLETE THERMAL ENVELOPE:

EXTERIOR WALLS (CAVITY)	R-20	5 1/2" BATTS
AND (CONTINUOUS INSULATION) SHEATHING	R-5	INSULATED EXTERIOR
BASEMENT WALLS (CONT INS)	R-15	STYROFOAM PERIMATE
BASEMENT WALLS (FRAMED)	R-19	3 1/2" BATTS
CRAWL SPACE (CONT INSUL)	R-15	STYROFOAM PERIMATE
CRAWL SPACE (FRAMED)	R-19	5 1/2" BATTS
FLOORS - UNHEATED BELOW	R-38	8" BATTS
SLABS - (INSULATE 4' DEEP) PERIMATE	R-10	2 1/8" STYROFOAM

    b. ADDITIONAL INSULATION REQUIREMENTS:

INTERIOR STUD WALLS	R-11	3 1/2" BATTS
INTERIOR BATHROOM WALLS	R-11	3 1/2" BATTS
FLOORS - HEATED BELOW	R-11	3 1/2" BATTS

14. NOT USED
15. U-VALUES FOR FENESTRATION (WINDOWS & DOORS) SHALL BE A MAXIMUM OF 0.32. INSTALLED WINDOWS & DOORS SHALL MEET OR EXCEED THIS REQUIREMENT. LEAVE MANUFACTURERS LABELS ON WINDOWS UNTIL INSPECTED AND APPROVED BY BUILDING DEPARTMENT.
16. PROVIDE 6 MIL POLYVINYL MOISTURE SEAL BEHIND ALL INTERIOR FINISHES AT EXTERIOR WALLS AND CEILINGS, SEALED AT JOINTS WITH DUCT TAPE AND TO WIRING ENCLOSURES WITH TENOSEALANT.
17. PROVIDE CAULKING, GASKETING, WEATHERSTRIPPING OR OTHER SEALANT IN ACCORDANCE WITH AIR LEAKAGE REQUIREMENTS OF SECTION 402.4 OF 2015 INTERNATIONAL ENERGY CONSERVATION CODE.
18. ONE HOUR TYPE "X" DRYWALL REQUIRED BELOW BASEMENT STAIRS.
19. INSTALL PINNED 3½" BATT INSULATION SMOKE STOP BELOW SPRAYED-ON URETHANE INSULATION EXPOSED IN ATTIC AREAS.
20. PROVIDE DRYWALL CAPS, VAPOR SEAL; AND INSULATION OVER RECESSED LIGHTS.
21. PROVIDE STEAM PROOF FIXTURES IN STEAM, SHOWER AND MIST LOCATIONS.
22. SLOPE FINISH GRADE AWAY FROM BUILDING.
23. ATTIC AND ROOF MOISTURE SEAL: (IF HUMIDIFIER OR HOT TUB ROOM) NO ELECTRICAL THRU CEILING - VAPOR BARRIER BEHIND FINISH - EPOXY PAINT OVER DRYWALL- AIR SPACE OVER INSULATION - VENT AT SOFFIT AND RIDGE.
24. PROVIDE DRAFT STOPS DIVIDING CONCEALED SPACES INCLUDING OVERHANG SOFFITS TO LESS THAN 1000 SQUARE FEET OR 60 FEET HORIZONTAL DIMENSION.
25. PROVIDE AND INSTALL 3" CORRUGATED PERFORATED POLYETHYLENE PIPING FOR RADON VENTING SYSTEM. SEE A1.0, A2.0 AND A2.1 FOR ROUTING. STUB UP AND CAP IN LOCATION AS APPROVED.
26. PROVIDE AND INSTALL SPRINKLER SYSTEM AS APPROVED BY FIRE DEPARTMENT

THESE DRAWINGS DO NOT INCLUDE THE COMPONENTS NECESSARY FOR CONSTRUCTION SAFETY.
© Copyright 2015 SAA, P.C.

Reviewed for Code Compliance
06/23/2022

Reviewed for Code Compliance
07/19/2022

SECTIONS
SECTION NOTES
DETAILS

STATE OF COLORADO
WILLIAM JOSEPH RANGITSCH
PE 0986
LICENSED ARCHITECT

William J. Rangitsch
970.879.0819
p.o. box 772910 345 lincoln ave ste. 200
steamboat springs, co. 80477
STEAMBOAT ARCHITECTURAL ASSOCIATES

A Cabin for
David & Jane Blandford
Lot B8, Marabou
Routt County, Colorado

30 AUG 22

A4.0

21-06

6/6/2022 3:21 PM
C:\SAA\Blandford Cabin\Blandford Cabin A3.R

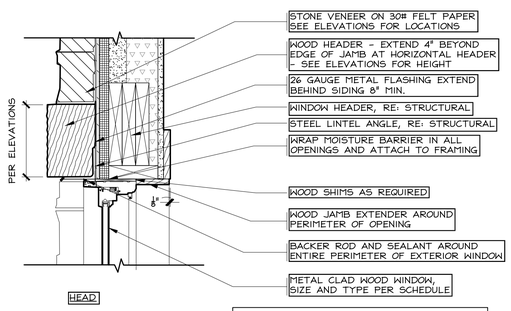

DETAIL SIMILAR AT DOORS AND FIXED WINDOWS

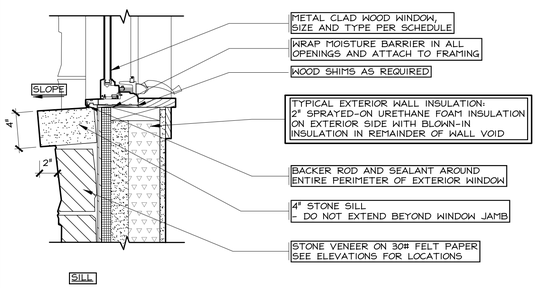

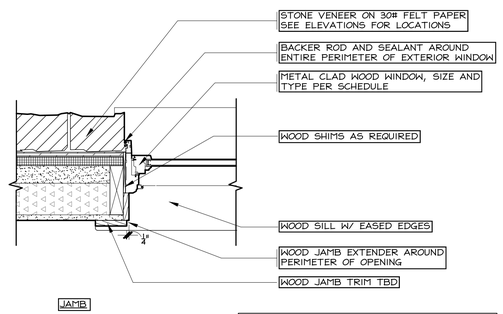

DETAIL SIMILAR AT DOORS AND FIXED WINDOWS

WINDOW AT STONE VENEER (TYPICAL LINTEL AND SILL)

1 DETAIL

1 1/2" = 1'-0"
SEE 17A3.2

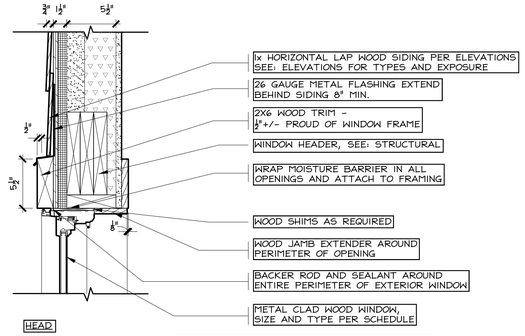

DETAIL SIMILAR AT DOORS AND FIXED WINDOWS

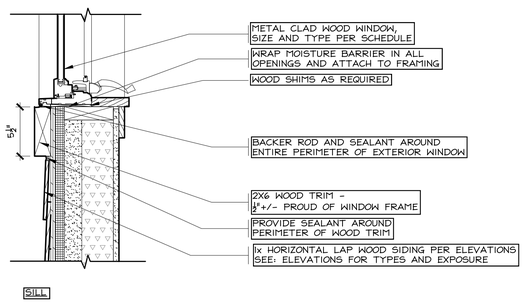

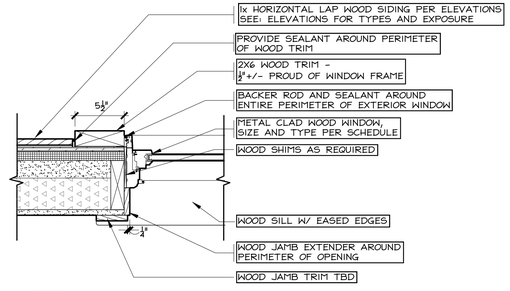

DETAIL SIMILAR AT DOORS AND FIXED WINDOWS

WINDOW AT HORIZONTAL WOOD SIDING

2 DETAIL

1 1/2" = 1'-0"
SEE 17A3.0

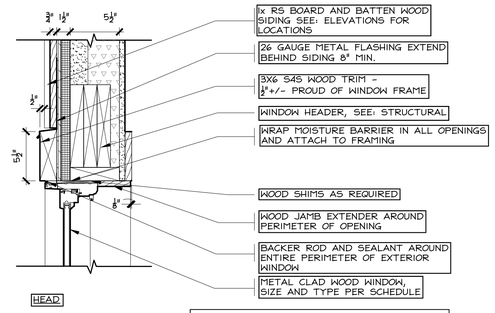

DETAIL SIMILAR AT DOORS AND FIXED WINDOWS

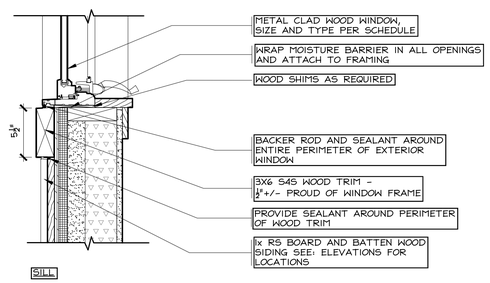

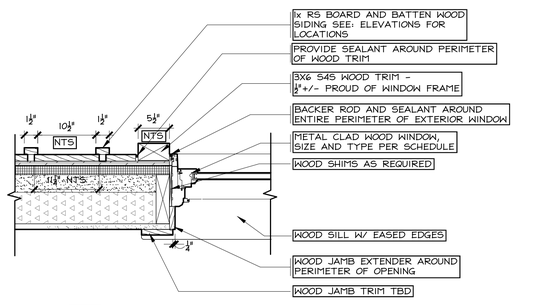

DETAIL SIMILAR AT DOORS AND FIXED WINDOWS

WINDOW AT VERTICAL BOARD & BATTEN WOOD SIDING

3 DETAIL

1 1/2" = 1'-0"
SEE 27A3.0

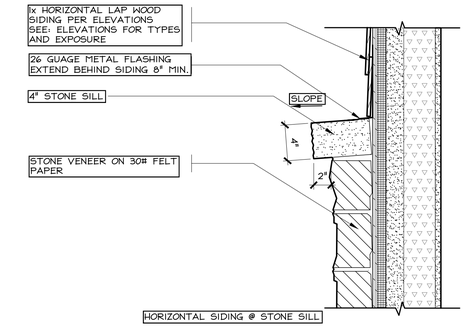

4 DETAIL

1 1/2" = 1'-0"
SEE 17A3.0

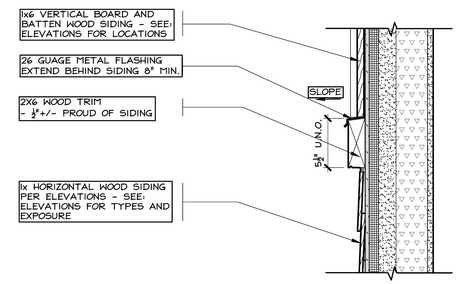

5 DETAIL

1 1/2" = 1'-0"
SEE 27A3.1

NOTES:
TYPICAL EXTERIOR WALL INSULATION:
2" SPRAYED-ON URETHANE FOAM INSULATION ON EXTERIOR SIDE OF WALL VOID, WITH BLOWN-IN INSULATION IN REMAINDER OF WALL VOID

NOTES:
1. VERIFY FINAL DESIGN OF INTERIOR TRIM WITH OWNER. INTERIOR TRIM SHOWN IS FOR DISCUSSION ONLY.
2. VERIFY ACTUAL THICKNESS OF STONE VENEER AND SIDING MATERIALS - ADJUST THICKNESS OF TRIM AND OTHER RELATED MATERIALS ACCORDINGLY.
- COORDINATE AS REQUIRED

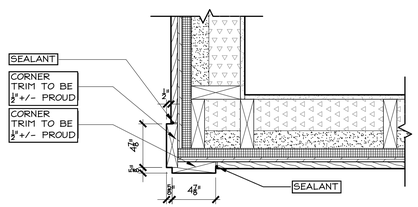

6 DETAIL

1 1/2" = 1'-0"
SEE 17A3.0

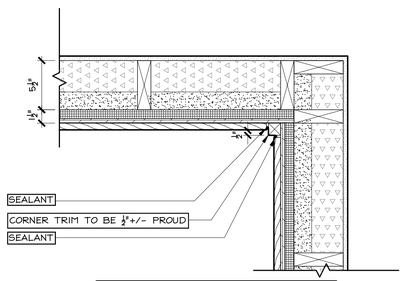

7 DETAIL

1 1/2" = 1'-0"
SEE 17A3.0

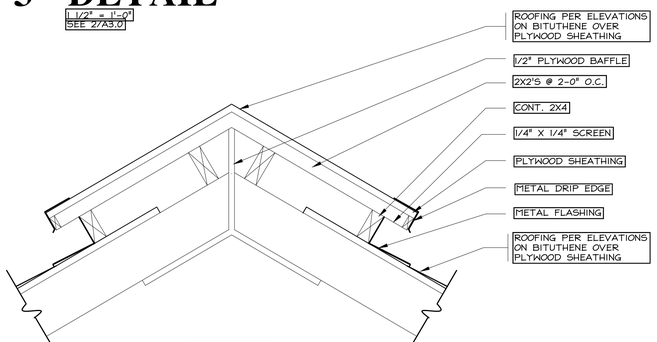

8 DETAIL

1 1/2" = 1'-0"
SEE 17A3.0

THESE DRAWINGS DO NOT INCLUDE THE COMPONENTS NECESSARY FOR CONSTRUCTION SAFETY.

© Copyright 2015 SAA, P.C.

Reviewed for Code Compliance
06/23/2022

Reviewed for Code Compliance
07/19/2022

DETAILS

STATE OF COLORADO
WILLIAM JOSEPH RANGITSCH
B-1986
LICENSED ARCHITECT

William J. Rangitsch
970.879.0819
p.o. box 772910 345 lincoln ave ste. 200
steamboat springs, co. 80477

STEAMBOAT ARCHITECTURAL ASSOCIATES

A Cabin for
David & Jane Blandford
Lot B8, Marabou
Routt County, Colorado

30 AUG 21

A5.0

21-06

RLS 38 NAS
C:\SAA\Blandford Cabin\Blandford Cabin A5.0
6/29/2022 3:37 PM

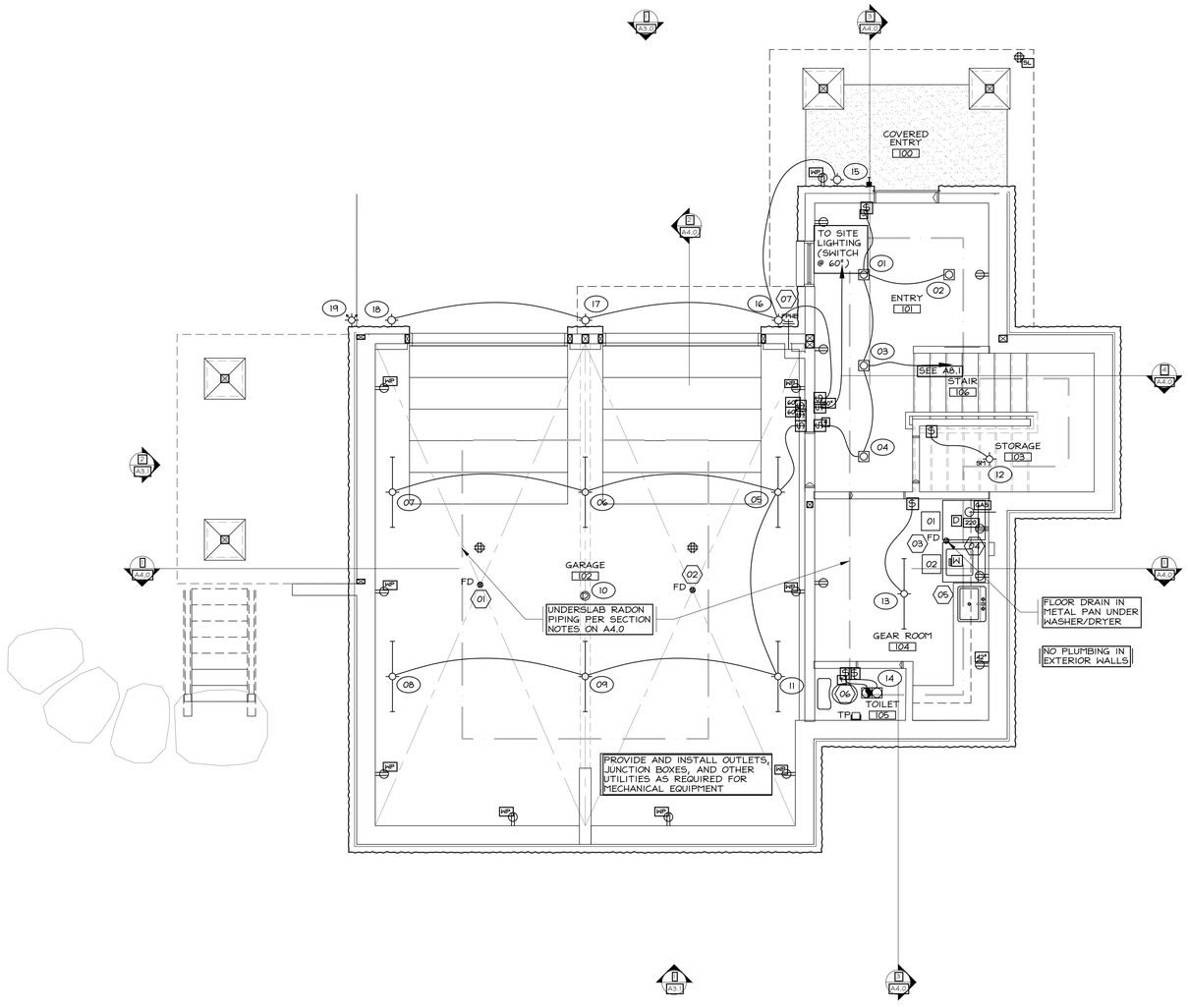

1 LOWER LEVEL UTILITY PLAN

1/4" = 1'-0"
SEE A1.0

GARAGE= 1,152 SF

KEY TO SYMBOLS

	RECESSED CAN
	WALL WASH
	WALL MOUNT
	HANGING
SM	SURFACE MOUNT
KL	KICK SPACE LIGHT
FAN	CEILING FAN
	CEILING FAN WITH LIGHT
	DOUBLE SPOTS
	SINGLE SPOTS
	EYEBALL
	SMOKE DETECTOR
	CARBON MONOXIDE DETECTOR
	COMBINATION SMOKE/CO DETECTOR
PS	PORCELAIN SURFACE MOUNT
	EXHAUST FAN
	EXHAUST FAN WITH LIGHT
	FLUORESCENT FIXTURE
SP	SPECIAL LIGHT AS NOTED
	DOOR BELL
B	DOOR BELL CHIMES
S	SWITCH
S3	SWITCH - 3 WAY
S4	SWITCH - 4 WAY
	WALL RECEPTACLE
	WALL RECEPTACLE HALF HOT
	FLOOR RECEPTACLE - LOCATE AS DIRECTED
	FLOOR RECEPTACLE HALF HOT
WP	WATERPROOF RECEPTACLE
	CEILING RECEPTACLE
42"	HORIZONTAL MOUNTED - 42" OFF FINISH FLOOR
220	RECEPTACLE 220V
SL	SEASONAL LIGHTING RECEPTACLE
TV	TELEVISION
T	TELEPHONE
MD	MOTION DETECTOR
C	COMPUTER
T	THERMOSTAT
FD	FLOOR DRAIN
FPHB	FREEZE PROOF HOSE BIB
HB	HOSE BIB
J	JUNCTION BOX
GAS	GAS HOOKUP FOR FIREPLACE OR GRILLE
	SINK DISPOSAL
101	ELECTRICAL SCHEDULE KEY
12	PLUMBING SCHEDULE KEY
10	APPLIANCE SCHEDULE KEY

THESE DRAWINGS DO NOT INCLUDE THE COMPONENTS NECESSARY FOR CONSTRUCTION SAFETY.

© Copyright 2015 SAA, P.C.

Reviewed for Code Compliance
06/23/2022

Reviewed for Code Compliance
07/19/2022

LOWER LEVEL UTILITY PLAN
KEY TO SYMBOLS

STATE OF COLORADO
WILLIAM JOSEPH RANGITSCH
PLA986
LICENSED ARCHITECT

William J. Rangitsch
970.879.0819
p.o. box 772910 345 lincoln ave ste. 200
steamboat springs, co. 80477
STEAMBOAT ARCHITECTURAL ASSOCIATES

A Cabin for
David & Jane Blandford
Lot B8, Marabou
Routt County, Colorado

30 AUG 21
A8.0
21-06

A8.0
C:\SAA\Blandford Cabin\Blandford Cabin A2.2
8/8/2022 3:21 PM

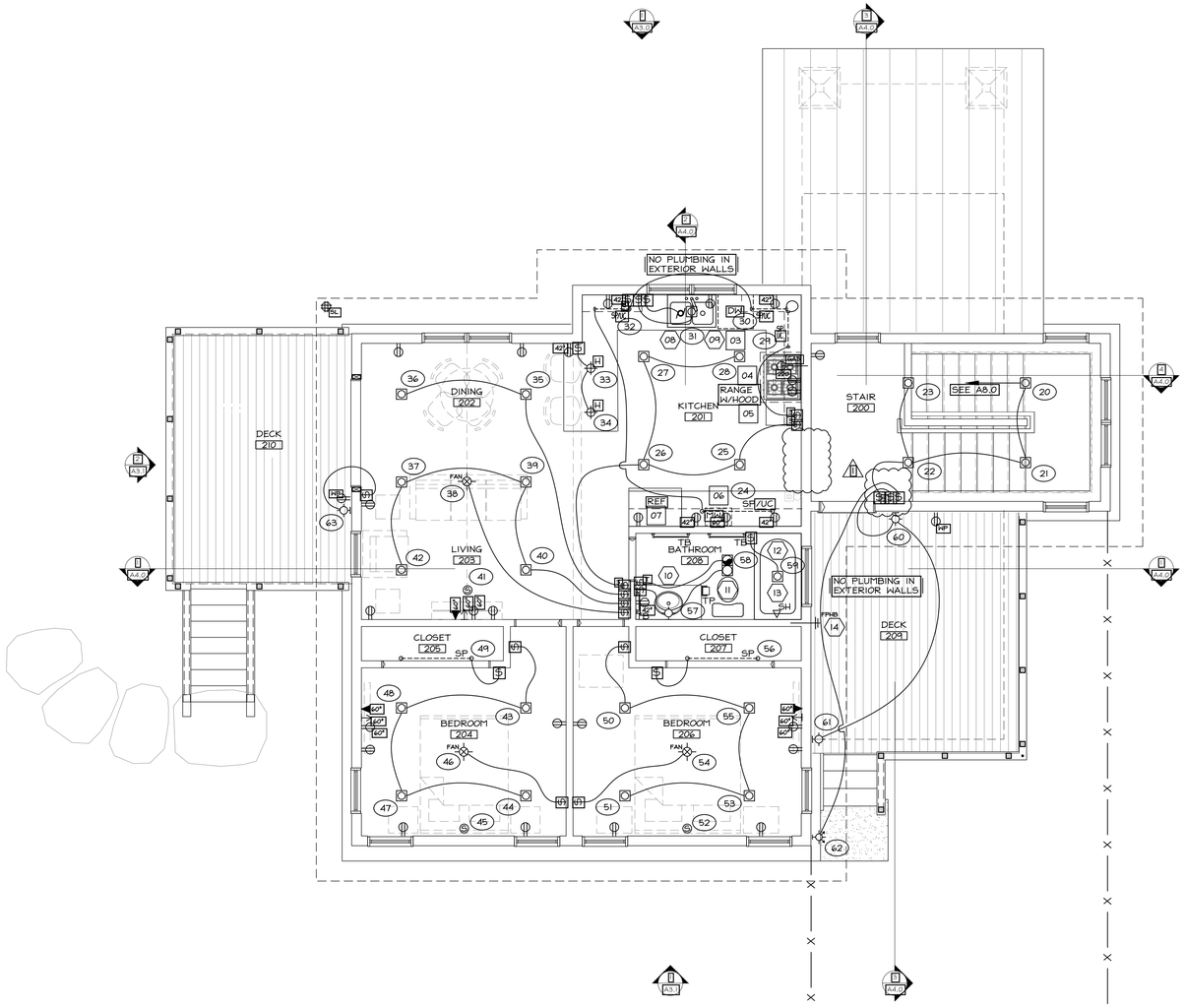

UTILITY NOTES

1. ALL WORK MUST COMPLY WITH FEDERAL, STATE, LOCAL LAWS, CODES AND ORDINANCES.
2. PLUMBING CONTRACTOR SHALL PROVIDE RISER ISOMETRIC, IF REQUIRED FOR PERMIT.
3. HEATING CONTRACTOR SHALL PROVIDE SHOP DRAWINGS ON SYSTEM LAYOUT, AND CUT SHEETS ON ALL EQUIPMENT AND ACCESSORIES.
4. ELECTRICAL CONTRACTOR SHALL SUPPLY LOAD CALCULATIONS AND ONE-LINE DIAGRAMS, IF REQUIRED FOR PERMIT.
5. G.F.C.I. PROTECTED RECEPTACLES REQUIRED ABOVE COUNTER WITHIN 6' OF SINK IN KITCHEN AND LAUNDRY, IN ALL BATHROOM OUTLETS, IN GARAGE, AND IN ALL EXTERIOR OUTLETS.
6. ALL ELECTRICAL BOXES SHALL BE PLACED WITHIN PLASTIC WIRING ENCLOSURES.
7. COORDINATE LOCATION OF ELECTRICAL OUTLET AND SWITCH BOXES WITH TILE AND OTHER FINISH MATERIALS. REVIEW LOCATIONS WITH GENERAL CONTRACTOR BEFORE INSTALLATION.
8. MOUNT ALL LIGHT SWITCHES, THERMOSTATS, ELECTRICAL RECEPTACLES AND SIMILAR DEVICES BETWEEN 9" AND 54" FROM FINISHED FLOOR WHEN FLOOR SPACE ALLOWS FOR PARALLEL APPROACH. FOR FORWARD APPROACH, MOUNT ALL ELECTRICAL DEVICES BETWEEN 15" AND 48" ABOVE FINISHED FLOOR.
9. PROVIDE AND INSTALL IN-FLOOR RADIANT HEATING SYSTEM IN ALL AREAS.
10. PROVIDE AND INSTALL SUPPLEMENTAL GAS FIRED, HIGH VELOCITY, FORCED AIR HEATING AND AIR CONDITIONING SYSTEM AS REQUIRED, AND APPROVED BY OWNER.
11. PROVIDE AND INSTALL MUSIC AND ENTERTAINMENT SYSTEMS AS REQUIRED AND APPROVED BY OWNER.
12. PROVIDE AND INSTALL SECURITY SYSTEM AS REQUIRED AND APPROVED BY OWNER.
13. PROVIDE AND INSTALL SLIDE TYPE DIMMER SWITCHES AS SHOWN. DO NOT INSTALL DIMMER SWITCHES AT FLUORESCENT LIGHTS, AND AS DIRECTED BY OWNER.
14. INSTALL OUTLETS AT UNDERSIDE OF WALL CABINETS WHERE 54" MOUNTING HEIGHT IS INDICATED IN KITCHEN.
15. PROVIDE AND INSTALL WIRELESS COMPUTER SYSTEM OR CAT 5 COMPUTER NETWORK CONNECTIONS AT ALL PHONE OUTLETS AS DIRECTED BY OWNER.VERIFY WITH OWNER WHICH SYSTEM WILL BE USED.
16. PROVIDE AND INSTALL PHONE OUTLETS AT EACH T.V. OUTLET LOCATION. VERIFY THIS REQUIREMENT WITH FINAL T.V. PROVIDER.
17. PROVIDE AND INSTALL LUTRON OR EQUAL TOUCHPAD LIGHT SWITCHING AS DIRECTED BY OWNER. EXTENT OF TOUCHPAD LIGHT SWITCHING TO BE DETERMINED.
18. SEASONAL LIGHTING OUTLETS TO BE MOUNTED IN SOFFITS AS DIRECTED.
19. PROVIDE AND INSTALL HEATED WALKWAYS, PATIOS AND DRIVEWAY "APRON" AS SHOWN OR AS REQUIRED AND APPROVED BY OWNER. VERIFY EXTENT OF SNOW MELT WITH OWNER.
20. PROVIDE AND INSTALL LIGHTNING RODS AS REQUIRED AND APPROVED BY OWNER.
21. PROVIDE AND INSTALL GENERATOR POWERED ELECTRIC BACK-UP SYSTEM AS REQUIRED AND APPROVED BY OWNER.
22. PROVIDE AND INSTALL SPRINKLER SYSTEM AS REQUIRED IN MARABOU DESIGN GUIDELINES AND AS APPROVED BY FIRE DEPARTMENT.

1 UPPER LEVEL UTILITY PLAN

1/4" = 1'-0"
SEE A1.0

LIVING= 797 SF

THESE DRAWINGS DO NOT INCLUDE THE COMPONENTS NECESSARY FOR CONSTRUCTION SAFETY.

© Copyright 2015 SAA, P.C.

Reviewed for Code Compliance
06/23/2022

Reviewed for Code Compliance
07/19/2022

UPPER LEVEL UTILITY PLAN
UTILITY NOTES

STATE OF COLORADO
WILLIAM JOSEPH RANGITSCH
LICENSED ARCHITECT

William J. Rangitsch
970.879.0819
p.o. box 772910 345 lincoln ave ste. 200
steamboat springs, co. 80477

STEAMBOAT ARCHITECTURAL ASSOCIATES

A Cabin for
David & Jane Blandford
Lot B8, Marabou
Routt County, Colorado

09 JUNE 22 | AS1- CHANGES PER RCRBD-ADU, DECK STAIRS
30 AUG 21

A8.1

21-06